Navigation Tools: Click on the "Table of Contents" below, or use the Bookmarks to the left.

Introduction

How to Use This Manual

This supplement contains information for the '98-01 ACCORD V6 Sedan and '98-01 ACCORD COUPE V6. Refer to the '98-01 ACCORD and ACCORD Coupe Service Manual, P/N 61S8008, for service procedures and data not included in this supplement.

The first page of each section is marked with a black tab that lines up with one of the thumb index tabs on this page and the back cover. You can quickly find the first page of each section without looking through a full table of contents. The symbols printed at the top corner of each page can also be used as a quick reference system.

Safety Messages

Your safety, and the safety of others, is very important. To help you make informed decisions, we have provided safety messages and other safety information throughout this manual. Of course, it is not practical or possible to warn you about all the hazards associated with servicing this vehicle. You must use your own good judgment.
You will find important safety information in a variety of forms including:

Safety Labels on the vehicle.
Safety Messages preceded by a safety alert symbol ⚠ and one of three signal words, DANGER, WARNING, or CAUTION. These signal words mean:

⚠ DANGER You WILL be KILLED or SERIOUSLY HURT if you don't follow instructions.

⚠ WARNING You CAN be KILLED or SERIOUSLY HURT if you don't follow instructions.

⚠ CAUTION You CAN be HURT if you don't follow instructions.

Instructions how to service this vehicle correctly and safely.

All information contained in this manual is based on the latest product information available at the time of printing. We reserve the right to make changes at any time without notice. No part of this publication may be reproduced, stored in retrieval system, or transmitted, in any form by any means, electronic, mechanical, photocopying, recording, or otherwise, without the prior written permission of the publisher. This includes text, figures and tables.

As you read this manual, you will find information that is preceded by a NOTICE symbol. The purpose of this message is to help prevent damage to your vehicle, other property, or the environment.

First Edition 9/2000
All Rights Reserved
Specifications apply to U.S.A. and Canada

HONDA MOTOR CO., LTD.
Service Publication Office

As sections with *include SRS components; special precautions are required when servicing.

marked sections are not included in this manual.

1998-01 Accord V-6

Supplement

SUPPLEMENTAL RESTRAINT SYSTEM (SRS)

The Accord Sedan/Coupe (V6) SRS includes a driver's airbag located in the steering wheel hub, a passenger's airbag located in the dashboard above the glove box, and side airbags ('00-01 models) located in the front seat-backs. Information necessary to safely service the SRS is included in the '98-01 Accord Sedan/Coupe (L4) Service Manual, P/N 61S8008. Items marked with an asterisk (*) on the contents page include or are located near SRS components. Servicing, disassembling or replacing these items will require special precautions and tools, and should therefore be done by and authorized Honda dealer.

- To avoid rendering the SRS inoperative, which could lead to personal injury or death in the event of a severe frontal collision, all SRS service work must be performed by an authorized Honda dealer.
- Improper service procedures, including incorrect removal and installation of the SRS, could lead to personal injury caused by unintentional deployment of the frontal airbags (and/or side airbags on some '00-01 models).
- Do not bump the SRS unit, Otherwise, the system may fail in case of a collision, or the airbags may deploy when the ignition switch is ON (II).
- SRS electrical wiring harnesses are indicated with yellow color coding. Related components are located in the steering column, front console, dashboard, dashboard lower panel, in the dashboard above the glove box, in the front seats ('00-01 models) and around the floor ('00-01 models). Do not use electrical test equipment on these circuits.

General Information

Chassis and Paint Codes - 1998 Model

Vehicle Identification Number

1HG CG1 6 4 * W A 000001

a b c d e f g h

a. Manufacturer, Make and Type of Vehicle
1HG: HONDA OF AMERICA MFG., INC., U.S.A.
HONDA, Passenger vehicle

b. Line, Body and Engine Type
CG1: ACCORD V6/J30A1
CG2: ACCORD COUPE V6/J30A1

c. Body Type and Transmission Type
1: 2-door Coupe/5-speed Manual
2: 2-door Coupe/4-speed Automatic
6: 4-door Sedan/4-speed Automatic

d. Vehicle Grade (Series)

US model	Canada model
4: LX, LX V6	4: LX, LX V6
5: EX, EX V6	5: EX, EX V6
	6: EX-L

e. Check Digit

f. Model Year
W: 1998

g. Factory Code
A: Marysville, Ohio Factory in U.S.A.

h. Serial Number
000001 –: US model
800001 –: Canada model

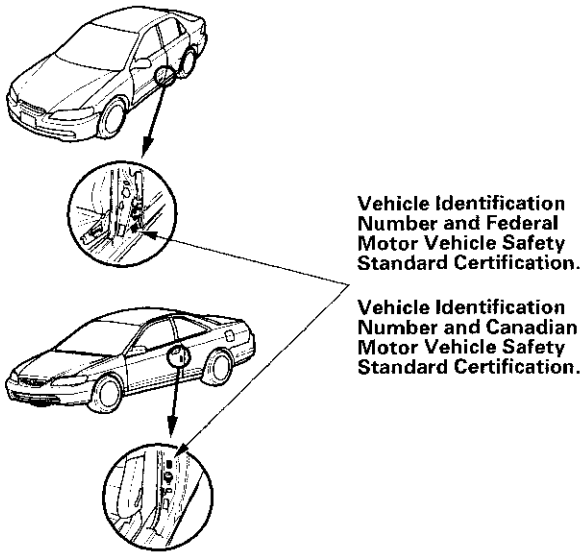

Engine Number

J30A1 - 1000001

a b

a. Engine Type
J30A1: 3.0 ℓ SOHC VTEC Sequential Multiport Fuel-injected engine

b. Serial Number

Transmission Number

B7XA - 5000001

a b

a. Transmission Type
B7XA: 4-speed Automatic
P2A8: 5-speed Manual

b. Serial Number

Paint Code

Code	Color
B-80P	Mystic Blue Pearl * Note 1
G-87P	Dark Emerald Pearl
NH-578	Taffeta White
NH-592P	Flamenco Black Pearl
NH-612M	Regent Silver Metallic
RP-25P	Black Currant Pearl
RP-29P	Raisin Pearl
R-94	San Marino Red
YR-508P	Heather Mist Metallic * Note 2

* Note 1: US model only
* Note 2: Canada model only

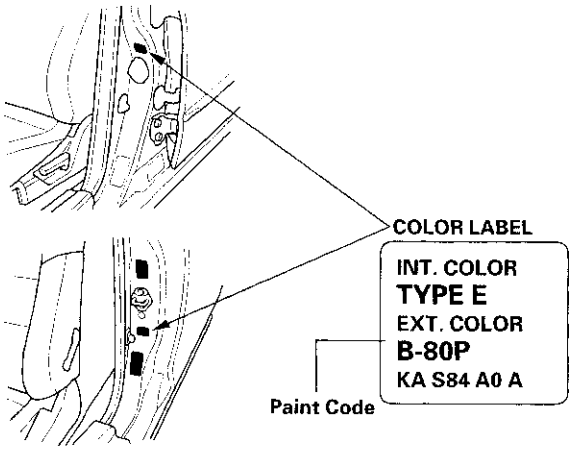

Chassis and Paint Codes - 1999 Model

Vehicle Identification Number

1HG CG1 6 4 * X A 000001

a b c d e f g h

a. Manufacturer, Make and Type of Vehicle
1HG: HONDA OF AMERICA MFG., INC., U.S.A.
HONDA, Passenger vehicle

b. Line, Body and Engine Type
CG1: ACCORD V6/J30A1
CG2: ACCORD COUPE V6/J30A1

c. Body Type and Transmission Type
2: 2-door Coupe/4-speed Automatic
6: 4-door Sedan/4-speed Automatic

d. Vehicle Grade (Series)

US model	Canada model
4: LX, LX V6	4: LX
5: EX, WX V6	5: EX

e. Check Digit

f. Model Year
X: 1999

g. Factory Code
A: Marysville, Ohio Factory in U.S.A.

h. Serial Number
000001—: US model
800001—: Canada model

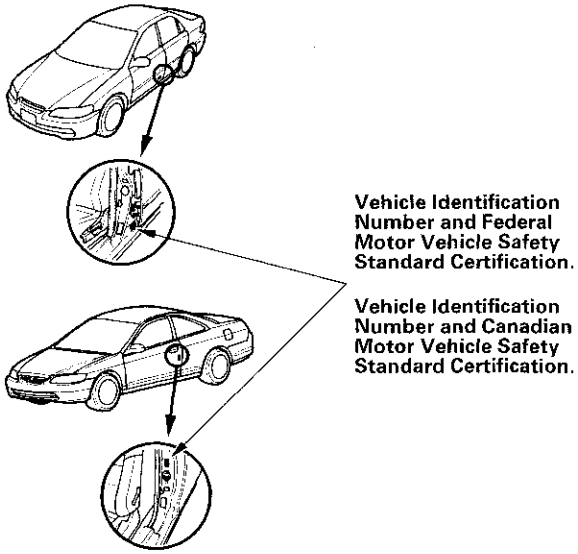

Engine Number

J30A1 - 2000001

a b

a. Engine Type
J30A1: 3.0 ℓ SOHC VTEC Sequential Multiport Fuel-injected engine

b. Serial Number

Transmission Number

B7XA - 6000001

a b

a. Transmission Type
B7XA: 4-speed Automatic

b. Serial Number

Paint Code

Code	Color
G-87P	Dark Emerald Pearl
NH-578	Taffeta White
NH-592P	Flamenco Black Pearl
NH-612M	Regent Silver Metallic * Note 2
NH-623M	Satin Silver Metallic
RP-25P	Black Currant Pearl * Note 1
R-94	San Marino Red * Note 1
YR-508M	Heather Mist Metallic

* Note 1: US model only
* Note 2: Canada model only

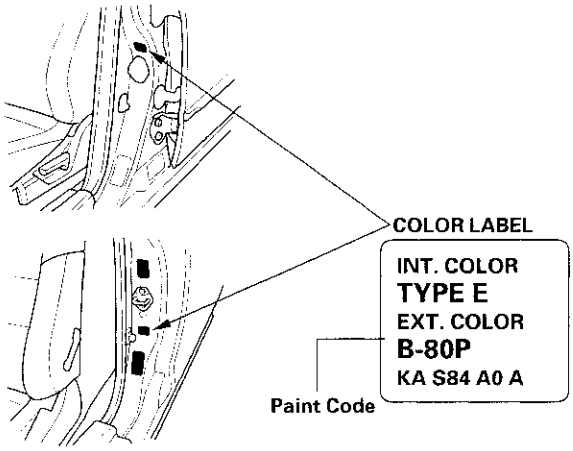

Chassis and Paint Codes - 2000 Model

Vehicle Identification Number

1HG CG5 5 4 * Y A 000001

a b c d e f g h

a. **Manufacturer, Make and Type of Vehicle**
   1HG: HONDA OF AMERICA MFG., INC., U.S.A.
   HONDA, Passenger vehicle
b. **Line, Body and Engine Type**
   CG1: ACCORD V6/J30A1
   CG2: ACCORD COUPE V6/J30A1
c. **Body Type and Transmission Type**
   2: 2-door Coupe/4-speed Automatic
   6: 4-door Sedan/4-speed Automatic
d. **Vehicle Grade (Series)**

US model	Canada model
4: LX, LX V6	4: LX
5: EX, EX V6	5: EX

e. **Check Digit**
f. **Model Year**
   Y: 2000
g. **Factory Code**
   A: Marysville, Ohio Factory in U.S.A.
h. **Serial Number**
   000001 –: US model
   800001 –: Canada model

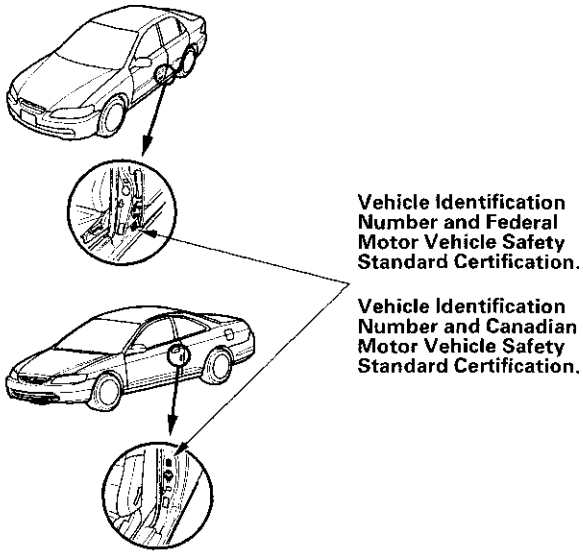

Engine Number

J30A1 - 3000001

a b

a. **Engine Type**
   J30A1: 3.0 ℓ SOHC VTEC Sequential Multiport Fuel-injected engine
b. **Serial Number**

Transmission Number

B7XA - 7500001

a b

a. **Transmission Type**
   B7XA: 4-speed Automatic (Ohio)
b. **Serial Number**

Paint Code

Code	Color
B-92P	Nighthawk Black Pearl
G-87P	Dark Emerald Pearl
NH-578	Taffeta White * Note
NH-623M	Satin Silver Metallic
RP-31M	Signet Silver Metallic
R-94	San Marino Red * Note
YR-524M	Naples Gold Metallic

* Note : US model only

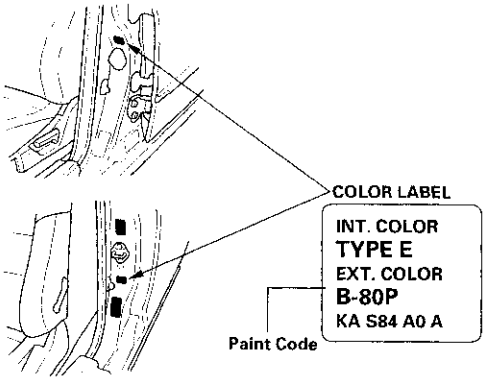

Chassis and Paint Codes - 2001 Model

Vehicle Identification Number

1HG CG5 5 4 * 1 A 000001

a b c d e f g h

a. Manufacturer, Make and Type of Vehicle
JHM: HONDA MOTOR CO., LTD.
HONDA, Passenger vehicle
1HG: HONDA OF AMERICA MFG., INC., U.S.A.
HONDA, Passenger vehicle

b. Line, Body and Engine Type
CG1: ACCORD V6/J30A1
CG2: ACCORD COUPE V6/J30A1

c. Body Type and Transmission Type
2: 2-door Coupe/4-speed Automatic
6: 4-door Sedan/4-speed Automatic

d. Vehicle Grade (Series)

US model	Canada model
4: LX, LX V6	4: LX
5: EX, EX V6	5: EX

e. Check Digit

f. Model Year
1: 2001

g. Factory Code
A: Marysville, Ohio Factory in U.S.A.
C: Saitama in Japan (Sayama).

h. Serial Number
000001 – : US model
800001 – : Canada model

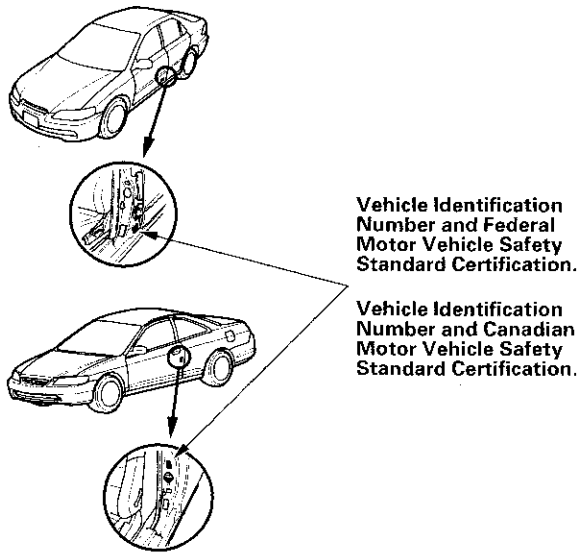

Engine Number

J30A1 - 4000001

a b

a. Engine Type
J30A1: 3.0 ℓ SOHC VTEC Sequential Multiport Fuel-injected engine

b. Serial Number

Transmission Number

B7XA - 6000001

a b

a. Transmission Type
B7XA: 4-speed Automatic

b. Serial Number

Paint Code

Code	Color
B-92P	Nighthawk Black Pearl
B-96P	Eternal Blue Pearl * Note 2
G-87P	Dark Emerald Pearl * Note 1
NH-578	Taffeta White * Note 1
NH-623M	Satin Silver Metallic
R-94	San Marino Red * Note 1
R-507P	Firepepper Pearl
RP-31M	Signet Silver Metallic * Note 2
YR-524M	Naples Gold Metallic

* Note 1: US model only
* Note 2: Canada model only

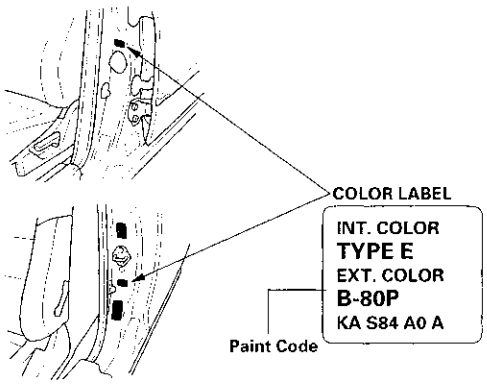

Identification Number Locations

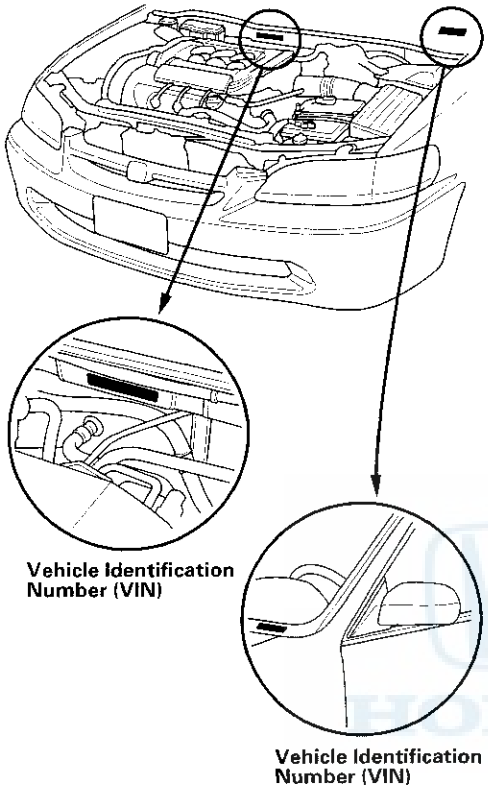

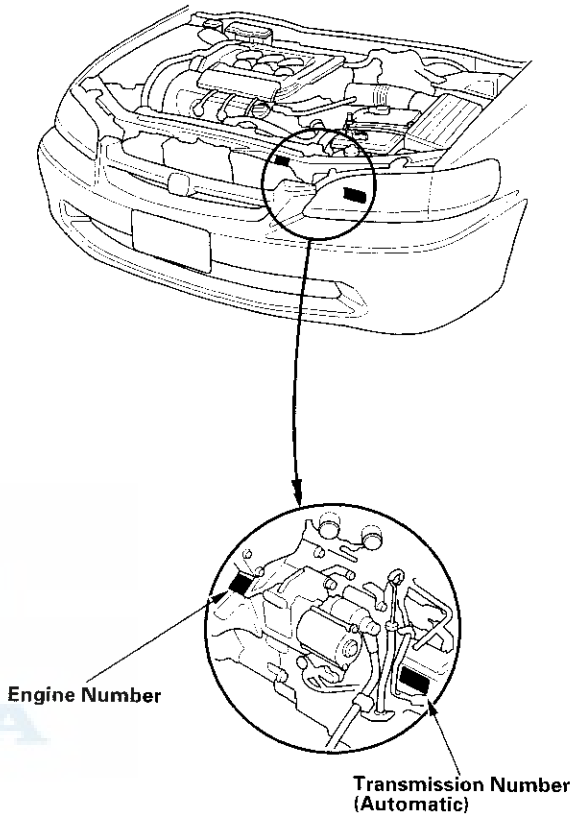

Warning/Caution Label Locations

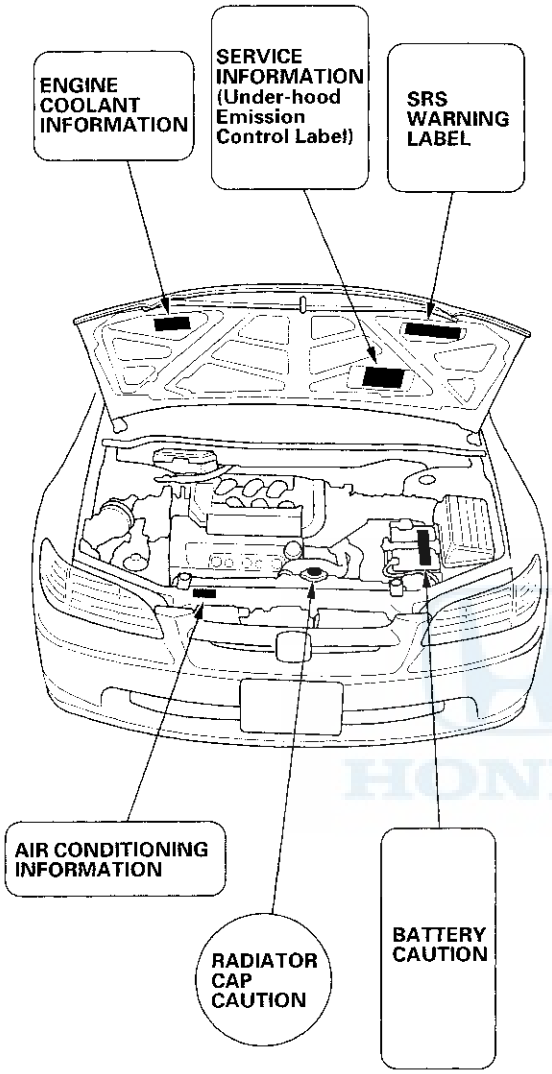

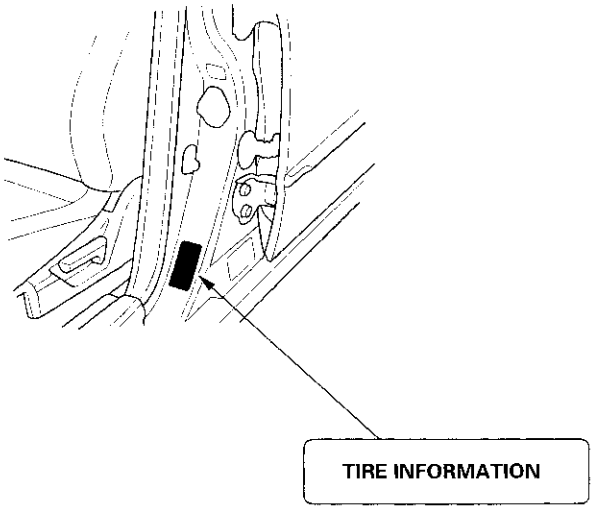

Under-hood Emission Control Label (1998 Model)

Emission Group Identification

Example:

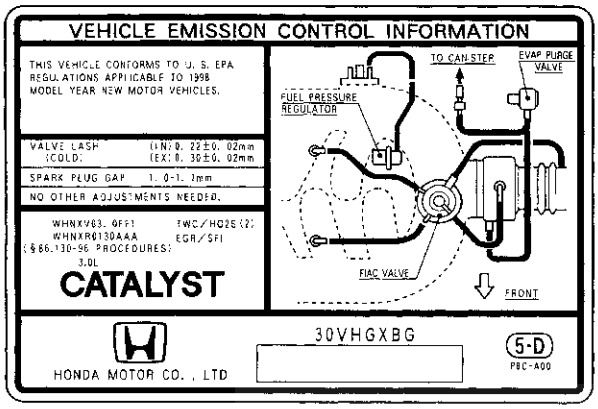

FEDERAL
THIS VEHICLE CONFORMS TO U.S. EPA REGULATIONS APPLICABLE TO 1998 MODEL YEAR NEW MOTOR VEHICLES.

CALIFORNIA TLEV
THIS VEHICLE CONFORMS TO U.S EPA AND STATE OF CALIFORNIA REGULATIONS APPLICABLE TO 1998 NEW TLEV PASSENGER CARS PROVIDED THAT THIS VEHICLE IS ONLY INTRODUCED INTO COMMERCE FOR SALE IN THE STATE OF CALIFORNIA.

TIER 1/LEV
THIS VEHICLE CONFORMS TO U.S. EPA TIER 1 AND STATE OF CALIFORNIA LEV REGULATIONS APPLICABLE TO 1998 MODEL YEAR NEW MOTOR VEHICLES.

CALIFORNIA LEV
THIS VEHICLE CONFORMS TO U.S EPA AND STATE OF CALIFORNIA REGULATIONS APPLICABLE TO 1998 NEW LEV PASSENGER CARS PROVIDED THAT THIS VEHICLE IS ONLY INTRODUCED INTO COMMERCE FOR SALE IN THE STATE OF CALIFORNIA.

CALIFORNIA ULEV
THIS VEHICLE CONFORMS TO U.S. EPA AND STATE OF CALIFORNIA REGULATIONS APPLICABLE TO 1998 NEW ULEV PASSENGER CARS PROVIDED THAT THIS VEHICLE IS ONLY INTRODUCED INTO COMMERCE FOR SALE IN THE STATE OF CALIFORNIA.

Engine and Evaporative Families

Engine Family:

W HNX V 03.0 FF1
a b c d e

a. **Model Year**
W: 1998
b. **Manufacturer Subcode**
HNX: HONDA
c. **Family Type**
V: LDV
T: LDT
d. **Displacement**
e. **Sequence Characters**

Evaporative Family:

W HNX R 0130 AAA
a b c d e

a. **Model Year**
W: 1998
b. **Manufacturer Subcode**
HNX: HONDA
c. **Family Type**
E: EVAP
R: EVAP/ORVR
d. **Canister Work Capacity**
e. **Sequence Characters**

Under-hood Emission Control Label (1999 Model)

Emission Group Identification

Example:

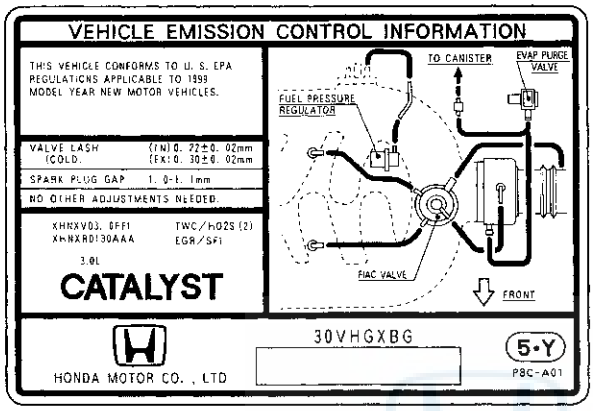

FEDERAL
THIS VEHICLE CONFORMS TO U.S. EPA REGULATIONS APPLICABLE TO 1999 MODEL YEAR NEW MOTOR VEHICLES.

CALIFORNIA TLEV
THIS VEHICLE CONFORMS TO U.S EPA AND STATE OF CALIFORNIA REGULATIONS APPLICABLE TO 1999 NEW TLEV PASSENGER CARS PROVIDED THAT THIS VEHICLE IS ONLY INTRODUCED INTO COMMERCE FOR SALE IN THE STATE OF CALIFORNIA.

TIER 1/LEV
THIS VEHICLE CONFORMS TO U.S. EPA TIER 1 AND STATE OF CALIFORNIA LEV REGULATIONS APPLICABLE TO 1999 MODEL YEAR NEW MOTOR VEHICLES.

CALIFORNIA LEV
THIS VEHICLE CONFORMS TO U.S EPA AND STATE OF CALIFORNIA REGULATIONS APPLICABLE TO 1999 NEW LEV PASSENGER CARS PROVIDED THAT THIS VEHICLE IS ONLY INTRODUCED INTO COMMERCE FOR SALE IN THE STATE OF CALIFORNIA.

CALIFORNIA ULEV
THIS VEHICLE CONFORMS TO U.S. EPA AND STATE OF CALIFORNIA REGULATIONS APPLICABLE TO 1999 NEW ULEV PASSENGER CARS PROVIDED THAT THIS VEHICLE IS ONLY INTRODUCED INTO COMMERCE FOR SALE IN THE STATE OF CALIFORNIA.

Engine and Evaporative Families

Engine Family:

X HNX V 03.0 FF1
a b c d e

a. **Model Year**
   X: 1999
b. **Manufacturer Subcode**
   HNX: HONDA
c. **Family Type**
   V: LDV
   T: LDT
d. **Displacement**
e. **Sequence Characters**

Evaporative Family:

X HNX R 0130 AAA
a b c d e

a. **Model Year**
   X: 1999
b. **Manufacturer Subcode**
   HNX: HONDA
c. **Family Type**
   E: EVAP
   R: EVAP/ORVR
d. **Canister Work Capacity**
e. **Sequence Characters**

Under-hood Emission Control Label (2000 Model)

Emission Group Identification

Example:

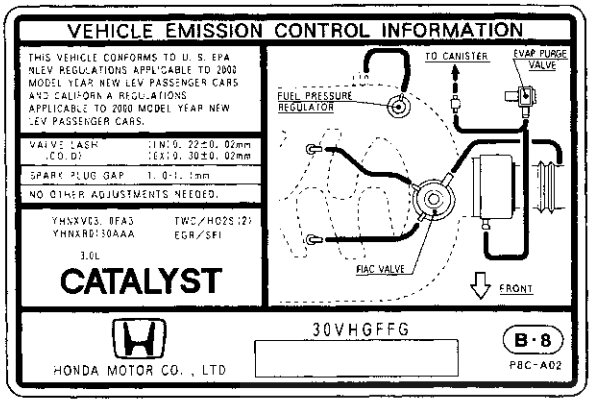

FEDERAL
THIS VEHICLE CONFORMS TO U.S. EPA NLEV REGULATIONS APPLICABLE TO 2000 MODEL YEAR NEW LEV PASSENGER CARS, AND CALIFORNIA REGULATIONS APPLICABLE TO 2000 MODEL YEAR NEW LEV PASSENGER CARS.

Engine and Evaporative Families

Engine Family:

Y HNX V 03.0 FF1
a b c d e

a. **Model Year**
   Y: 2000
b. **Manufacturer Subcode**
   HNX: HONDA
c. **Family Type**
   V: LDV
   T: LDT
d. **Displacement**
e. **Sequence Characters**

Evaporative Family:

Y HNX R 0130 AAA
a b c d e

a. **Model Year**
   Y: 2000
b. **Manufacturer Subcode**
   HNX: HONDA
c. **Family Type**
   E: EVAP
   R: EVAP/ORVR
d. **Canister Work Capacity**
e. **Sequence Characters**

Under-hood Emission Control Label (2001 Model)

Emission Group Identification

Example:

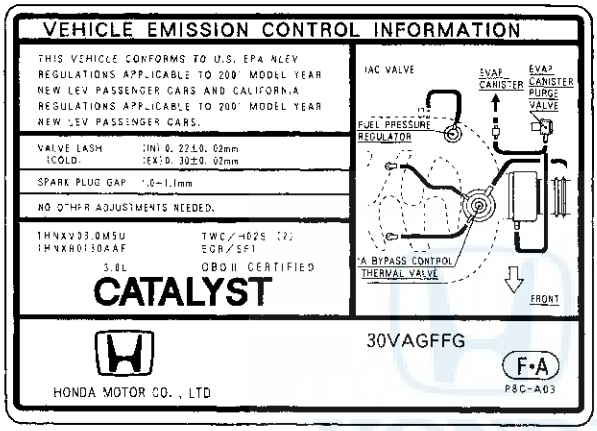

FEDERAL
THIS VEHICLE CONFORMS TO U.S. EPA NLEV REGULATIONS APPLICABLE TO 2001 MODEL YEAR NEW LEV PASSENGER CARS, AND CALIFORNIA REGULATIONS APPLICABLE TO 2001 MODEL YEAR NEW LEV PASSENGER CARS.

CANADIAN TIER 1
THIS VEHICLE CONFORMS TO U.S. EPA NLEV REGULATIONS AND CANDIAN TIER 1 STANDARDS FOR 2001 MODEL YEAR NEW PASSENGER CARS.

Engine and Evaporative Families

Engine Family:

1 HNX V 03.0 M5U
a b c d e

a. **Model Year**
   1: 2001
b. **Manufacturer Subcode**
   HNX: HONDA
c. **Family Type**
   V: LDV
   T: LDT
d. **Displacement**
e. **Sequence Characters**

Evaporative Family:

1 HNX R 0130 AAF
a b c d e

a. **Model Year**
   1: 2001
b. **Manufacturer Subcode**
   HNX: HONDA
c. **Family Type**
   E: EVAP
   R: EVAP/ORVR
d. **Canister Work Capacity**
e. **Sequence Characters**

Parts Marking

To deter vehicle theft, certain major components are marked with the vehicle identification number (VIN). Original parts have self-adhesive labels. Replacement body parts will have self-adhesive labels, and a replacement engine and transmission will have the VIN plate attached with a break-off bolt.

NOTE: Be careful not to damage the parts marking labels during body repair. Mask the labels before repairing the part.

Specifications

Standards and Service Limits

Design Specifications

Body Specifications

Standards and Service Limits

Engine Electrical

Item	Measurement	Qualification	Standard or New	Service Limit
Ignition coil	Rated voltage		12 V	
	Primary winding resistance	at 68°F (20°C)	0.34 – 0.42 Ω	
	Secondary winding resistance	at 68°F (20°C)	1.71 – 20.3 kΩ	
	Firing order		1 – 4 – 2 – 5 – 3 – 6	
Ignition wire	Resistance	at 68°F (20°C)	25 kΩ max.	
Spark plug	Type		NGK: PZFR5F-11 DENSO: PKJ16CR-L11	
	Gap		1.0 – 1.1 mm (0.039 – 0.043 in.)	1.3 mm (0.05 in.)
Ignition timing		At idle (check the *red* mark)	A/T (in N or P): 10 ± 2°BTDC at 680 ± 50 rpm	
Alternator belt	Tension adjustment		Auto adjuster type	
Alternator	Output	At 13.5 V and normal engine temperature	100 A	
Starter	Output		1.6 kW	
	Commutator mica depth		0.4 – 0.5 mm (0.016 – 0.020 in.)	0.15 mm (0.006 in.)
	Commutator runout		0.02 mm (0.001 in.) max.	0.05 mm (0.002 in.)
	Commutator O.D.		28.0 – 28.1 mm (1.102 – 1.106 in.)	27.5 mm (1.083 in.)
	Brush length		15.8 – 16.2 mm (0.62 – 0.64 in.)	11.0 mm (0.43 in.)
	Brush spring tension (new)		15.7 – 17.7 N (1.60 – 1.80 kgf, 3.53 – 3.97 lbs)	

Engine Assembly

Item	Measurement	Qualification	Standard or New	Service Limit
Compression	Pressure Check at 200 rpm with wide open throttle. (See Design Specs for ratio.)	Minimum	930 kPa (9.5 kgf/cm², 135 psi)	———
		Maximum variation	200 kPa (2.0 kgf/cm², 28 psi)	———

Cylinder Head

Item	Measurement	Qualification	Standard or New	Service Limit
Head	Warpage		— — —	0.05 mm (0.002 in.)
	Height		120.95 – 121.05 mm (4.762 – 4.766 in.)	— — —
Camshaft	End play		0.05 – 0.20 mm (0.002 – 0.008 in.)	0.20 mm (0.008 in.)
	Camshaft-to-holder oil clearance		0.050 – 0.089 mm (0.0020 – 0.0035 in.)	0.15 mm (0.006 in.)
	Total runout		0.03 mm (0.001 in.) max.	0.04 mm (0.002 in.)
	Cam lobe height	Intake, primary	34.615 mm (1.3628 in.)	— — —
		Intake, mid	36.210 mm (1.4256 in.)	— — —
		Intake, secondary	31.188 mm (1.2279 in.)	— — —
		Exhaust	36.076 mm (1.4203 in.)	— — —
Valves	Clearance (cold)	Intake	0.20 – 0.24 mm (0.008 – 0.009 in.)	— — —
		Exhaust	0.28 – 0.32 mm (0.011 – 0.013 in.)	— — —
	Stem O.D.	Intake	5.485 – 5.495 mm (0.2159 – 0.2163 in.)	5.455 mm (0.2148 in.)
		Exhaust	5.450 – 5.460 mm (0.2146 – 0.2150 in.)	5.420 mm (0.2134 in.)
	Stem-to-guide clearance	Intake	0.020 – 0.045 mm (0.0008 – 0.018 in.)	0.08 mm (0.003 in.)
		Exhaust	0.055 – 0.080 mm (0.0022 – 0.0031 in.)	0.12 mm (0.005 in.)
Valve seats	Width	Intake	1.25 – 1.55 mm (0.049 – 0.061 in.)	2.00 mm (0.079 in.)
		Exhaust	1.25 – 1.55 mm (0.049 – 0.061 in.)	2.00 mm (0.079 in.)
	Stem installed height	Intake	46.75 – 47.55 mm (1.841 – 1.872 in.)	47.80 mm (1.882 in.)
		Exhaust	46.68 – 47.48 mm (1.838 – 1.869 in.)	47.73 mm (1.879 in.)
Valve springs	Free length	Intake	51.03 mm (2.009 in.)	— — —
		Exhaust	53.48 mm (2.106 in.)	— — —
Valve guides	I.D.	Intake	5.515 – 5.530 mm (0.2171 – 0.2177 in.)	5.55 mm (0.219 in.)
		Exhaust	5.515 – 5.530 mm (0.2171 – 0.2177 in.)	5.55 mm (0.219 in.)
	Installed height	Intake	21.20 – 22.20 mm (0.835 – 0.874 in.)	— — —
		Exhaust	20.63 – 21.63 mm (0.812 – 0.852 in.)	— — —
Rocker arms	Arm-to-shaft clearance	Intake	0.026 – 0.067 mm (0.0010 – 0.0026 in.)	0.067 mm (0.0026 in.)
		Exhaust	0.026 – 0.077 mm (0.0010 – 0.0030 in.)	0.077 mm (0.0030 in.)

Standards and Service Limits

Engine Block

Item	Measurement	Qualification	Standard or New	Service Limit
Block	Warpage of deck		0.07 mm (0.003 in.) max.	0.10 mm (0.004 in.)
	Bore diameter		86.000 – 86.015 mm (3.3858 – 3.3864 in.)	86.065 mm (3.3884 in.)
	Bore taper		———	0.05 mm (0.002 in.)
	Reboring limit		———	0.5 mm (0.02 in.)
Piston	Skirt O.D.at 16.0 mm (0.63 in.) from bottom of skirt		85.975 – 85.985 mm (3.3848 – 3.3852 in.)	85.965 mm (3.3844 in.)
	Clearance in cylinder		0.015 – 0.040 mm (0.0006 – 0.0016 in.)	0.08 mm (0.003 in.)
	Ring groove width	Top	1.220 – 1.230 mm (0.0480 – 0.0484 in.)	1.25 mm (0.049 in.)
		Second	1.220 – 1.230 mm (0.0480 – 0.0484 in.)	1.25 mm (0.049 in.)
		Oil	2.805 – 2.825 mm (0.1104 – 0.1112 in.)	2.85 mm (0.112 in.)
Piston rings	Ring-to-groove clearance	Top	0.035 – 0.060 mm (0.0014 – 0.024 in.)	0.13 mm (0.005 in.)
		Second	0.030 – 0.055 mm (0.0012 – 0.0022 in.)	0.13 mm (0.005 in.)
	Ring end gap	Top	0.20 – 0.35 mm (0.008 – 0.014 in.)	0.60 mm (0.024 in.)
		Second	0.040 – 0.55 mm (0.016 – 0.022 in.)	0.70 mm (0.028 in.)
		Oil	0.20 – 0.70 mm (0.008 – 0.028 in.)	0.80 mm (0.031 in.)
Piston pin	O.D.		21.962 – 21.965 mm (0.8646 – 0.8648 in.)	21.954 mm (0.8643 in.)
	Pin-to-piston clearance		– 0.0050 – +0.0010 mm (–0.00020 – +0.00004 in.)	0.004 mm (0.0002 in.)
Connecting rod	Pin-to-rod clearance		0.005 – 0.014 mm (0.0002 – 0.0006 in.)	0.019 mm (0.0007 in.)
	Small-end bore diameter		21.970 – 21.976 mm (0.8650 – 0.8652 in.)	———
	Large-end bore diameter	Nominal	56.0 mm (2.20 in.)	———
	End play installed on crankshaft		0.15 – 0.35 mm (0.006 – 0.014 in.)	0.45 mm (0.018 in.)
Crankshaft	Main journal diameter		71.976 – 72.000 mm (2.8337 – 2.8346 in.)	———
	Rod journal diameter		52.976 – 53.000 mm (2.0857 – 2.0866 in.)	———
	Rod/main journal taper		0.005 mm (0.0002 in.) max.	0.010 mm (0.0004 in.)
	Rod/main journal out-of-round		0.005 mm (0.0002 in.) max.	0.010 mm (0.0004 in.)
	End play		0.10 – 0.35 mm (0.004 – 0.014 in.)	0.45 mm (0.018 in.)
	Runout		0.020 mm (0.0008 in.) max.	0.03 mm (0.0012 in.)
Crankshaft bearings	Main bearing-to-journal oil clearance		0.020 – 0.044 mm (0.0008 – 0.0017 in.)	0.050 mm (0.0020 in.)
	Rod bearing clearance		0.020 – 0.044 mm (0.0008 – 0.0017 in.)	0.050 mm (0.002 in.)

Engine Lubrication

Item	Measurement	Qualification	Standard or New	Service Limit
Engine oil	Capacity		5.0 ℓ (5.3 US qt, 4.4 Imp qt) for engine overhaul 4.4 ℓ (4.6 US qt, 3.9 Imp qt) for oil change, including filter 4.0 ℓ (4.2 US qt, 3.5 Imp qt) for oil change, without filter	
Oil pump	Inner-to-outer rotor clearance		0.04 – 0.16 mm (0.002 – 0.006 in.)	0.20 mm (0.008in.)
	Pump housing-to-outer rotor clearance		0.14 – 0.19 mm (0.006 – 0.007 in.)	0.20 mm (0.008 in.)
	Pump housing-to-outer rotor axial clearance		0.02 – 0.07 mm (0.001 – 0.003 in.)	0.12 mm (0.005 in.)
	Oil pressure with oil temperature at 176°F (80°C)	at idle	70 kPa (0.7 kgf/cm², 10 psi)	
		at 3,000 rpm	490 kPa (5.0 kgf/cm², 71 psi)	

Cooling

Item	Measurement	Qualification	Standard or New	Service Limit
Radiator	Coolant capacity (includes engine, heater, hoses and reservoir)	Engine overhaul	7.5 ℓ (7.9 US qt, 6.6 Imp qt)	
		Coolant change	5.6 ℓ (5.9 US qt, 4.9 Imp qt)	
Reservoir	Coolant capacity		0.6 ℓ (0.6 US qt, 0.5 Imp qt)	
Radiator cap	Opening pressure		93 – 123 kPa (0.95 – 1.25 kgf/cm², 14 – 18 psi)	
Thermostat '98-00 models	Opening temperature	Begins to open	169 – 176°F (76 – 80°C)	
		Fully open	194°F (90°C)	
	Valve lift at fully open		10.0 mm (0.39 in.) min.	
Thermostat '01 models	Opening temperature	Begins to open	163 – 171°F (73 – 77°C)	
		Fully open	190°F (88°C)	
	Valve lift at fully open		10.0 mm (0.39 in.) min.	
Radiator fan switch	Thermoswitch "ON" temperature		196 – 203°F (91 – 95°C)	
	Thermoswitch "OFF" temperature		Subtract 5 – 15°F (3 – 8°C) from actual "ON" temperature	
	Fan timer "ON" temperature		217 – 232°F (103 – 111°C)	
	Fan timer "OFF" temperature		Subtract 5 – 23°F (3 – 13°C) from actual "ON" temperature	

Fuel and Emissions

Item	Measurement	Qualification	Standard or New	Service Limit
Fuel pressure regulator	Pressure with regulator vacuum hose disconnected		280 – 330 kPa (2.9 – 3.4 kgf/cm², 41 – 48 psi)	
Fuel tank	Capacity		64.8 ℓ (17.1 US gal, 14.3 Imp gal)	
Engine idle	Idle speed with headlights and radiator fan off	In N or P	680 ± 50 rpm	
	Idle CO %		0.1 max.	

Standards and Service Limits

Automatic Transmission and Differential

Item	Measurement	Qualification	Standard or New	Service Limit
ATF (Automatic Transmission Fluid)	Capacity	Use Honda ATF-Z1	For fluid change: 2.9 ℓ (3.1 US qt, 2.6 Imp qt) For overhaul: 7.2 ℓ (7.6 US qt, 6.3 Imp qt)	
ATF pressure	Line pressure	At 1,500 rpm in N or P position	800 – 860 kPa (8.2 – 8.8 kgf/cm², 120 – 130 psi)	760 kPa (7.7 kgf/cm², 110 psi)
	4th clutch pressure	At 2,000 rpm in D4 position	790 – 870 kPa (8.1 – 8.9 kgf/cm², 120 – 130 psi)	750 kPa (7.6 kgf/cm², 110 psi)
	3rd clutch pressure	At 2,000 rpm in D4 position	790 – 870 kPa (8.1 – 8.9 kgf/cm², 120 – 130 psi)	750 kPa (7.6 kgf/cm², 110 psi)
	2nd clutch pressure	At 1,500 rpm in 2 position	790 – 870 kPa (8.1 – 8.9 kgf/cm², 120 – 130 psi)	750 kPa (7.6 kgf/cm², 110 psi)
	1st clutch pressure	At 1,500 rpm in 1 position	790 – 870 kPa (8.1 – 8.9 kgf/cm², 120 – 130 psi)	750 kPa (7.6 kgf/cm², 110 psi)
Torque converter	Stall speed: Check with vehicle on level ground			2,250 – 2,550 rpm
Clutches	Clutch end plate-to-top disc clearance	1st		1.2 – 1.4 mm (0.047 – 0.055 in.)
		2nd		0.85 – 1.05 mm (0.033 – 0.041 in.)
		3rd		0.55 – 0.75 mm (0.022 – 0.030 in.)
		4th		0.55 – 0.75 mm (0.022 – 0.030 in.)
	Clutch return spring free length	1st	45.7 mm (1.80 in.)	43.7 mm (1.72 in.)
		2nd	63.0 mm (2.48 in.)	61.0 mm (2.40 in.)
		3rd, 4th	33.5 mm (1.32 in.)	31.5 mm (1.24 in.)
	Clutch disc thickness		1.94 mm (0.076 in.)	— — — —
	Clutch plate thickness	1st	2.0 mm (0.079 in.)	When discolored
		2nd	2.0 mm (0.079 in.)	When discolored
		3rd	2.3 mm (0.091 in.)	When discolored
		4th	2.0 mm (0.079 in.)	When discolored
	1st and 2nd clutch end plate thickness	Mark 1	3.10 mm (0.122 in.)	When discolored
		Mark 2	3.20 mm (0.126 in.)	When discolored
		Mark 3	3.30 mm (0.130 in.)	When discolored
		Mark 4	3.40 mm (0.134 in.)	When discolored
		Mark 6	2.60 mm (0.102 in.)	When discolored
		Mark 7	2.70 mm (0.106 in.)	When discolored
		Mark 8	2.80 mm (0.110 in.)	When discolored
		Mark 9	2.90 mm (0.114 in.)	When discolored
		Mark 0	3.00 mm (0.118 in.)	When discolored
	3rd and 4th clutch end plate thickness	Mark 1	2.10 mm (0.083 in.)	When discolored
		Mark 2	2.20 mm (0.087 in.)	When discolored
		Mark 3	2.30 mm (0.091 in.)	When discolored
		Mark 4	2.40 mm (0.094 in.)	When discolored
		Mark 5	2.50 mm (0.098 in.)	When discolored
		Mark 6	2.60 mm (0.102 in.)	When discolored
		Mark 7	2.70 mm (0.106 in.)	When discolored
		Mark 8	2.80 mm (0.110 in.)	When discolored
		Mark 9	2.90 mm (0.114 in.)	When discolored

Item	Measurement	Qualification	Standard or New	Service Limit
Valve body	Stator shaft needle bearing contact I.D.	Torque converter side	27.000 – 27.021 mm (1.0630 – 1.0638 in.)	When worn or damaged
		ATF pump side	29.000 – 29.021 mm (1.1417 – 1.1426 in.)	When worn or damaged
	ATF pump gear thrust clearance		0.03 – 0.05 mm (0.001 – 0.002 in.)	0.07 mm (0.003 in.)
	ATF pump gear-to-body clearance	Drive gear	0.210 – 0.265 mm (0.0083 – 0.0104 in.)	———
		Driven gear	0.070 – 0.125 mm (0.0028 – 0.0049 in.)	———
	ATF pump drive gear I.D.		14.016 – 14.034 mm (0.5518 – 0.5525 in.)	When worn or damaged
	ATF pump driven gear shaft O.D.		13.980 – 13.99 mm (0.5504 – 0.5508 in.)	When worn or damaged
Reverse shift fork	Fork finger thickness		5.60 – 6.00 mm (0.220 – 0.236 in.)	5.40 mm (0.213 in.)
Park gear and pawl				When worn or damaged
Servo body	Shift fork shaft bore I.D.		14.000 – 14.010 mm (0.5512 – 0.5516 in.)	———
	Shift fork shaft valve bore I.D.		37.000 – 37.039 mm (1.4567 – 1.4582 in.)	37.045 mm (1.4585 in.)
Regulator valve body	Sealing ring contact I.D.		32.000 – 32.025 mm (1.2598 – 1.2608 in.)	32.050 mm (1.2618 in.)
Accumulator body	Sealing ring contact I.D.		35.000 – 35.025 mm (1.3780 – 1.3789 in.)	35.05 mm (1.3799 in.)
Stator shaft	Sealing ring contact I.D.		29.000 – 29.013 mm (1.1417 – 1.1422 in.)	29.050 mm (1.1437 in.)

Standards and Service Limits

Automatic Transmission and Differential (cont'd)

Item	Measurement	Qualification	Standard or New	Service Limit
Mainshaft	Diameter of needle bearing contact area	at stator shaft	22.984–23.000 mm (0.9049–0.9055 in.)	When worn or damaged
		at 3rd gear	52.975–52.991 mm (2.0856–2.0863 in.)	When worn or damaged
		at 4th gear collar	33.975–33.991 mm (1.3376–1.3382 in.)	When worn or damaged
	I.D. of 3rd gear		59.000–59.019 mm (2.3228–2.3236 in.)	When worn or damaged
	I.D. of 4th gear		40.000–40.016 mm (1.5748–1.5754 in.)	When worn or damaged
	End play of 3rd gear		0.03–0.31 mm (0.001–0.012 in.)	———
	End play of 4th gear		0.10–0.22 mm (0.004–0.009 in.)	———
	41 x 73 mm thrust shim thickness	No. 1	7.85 mm (0.309 in.)	When worn or damaged
		No. 2	7.90 mm (0.311 in.)	When worn or damaged
		No. 3	7.95 mm (0.313 in.)	When worn or damaged
		No. 4	8.00 mm (0.315 in.)	When worn or damaged
		No. 5	8.05 mm (0.317 in.)	When worn or damaged
		No. 6	8.10 mm (0.319 in.)	When worn or damaged
	Thrust washer thickness	27 x 47 x 5 mm	5.00 mm (0.197 in.)	When worn or damaged
	Length of 4th gear collar		58.5–58.6 mm (2.303–2.307 in.)	———
	4th gear collar flange thickness		4.45–4.60 mm (0.175–0.181 in.)	When worn or damaged
	Sealing ring thickness	32 mm sealing ring	1.850–1.950 mm (0.073–0.077 in.)	1.800 mm (0.071 in.)
		29 mm sealing ring	1.850–1.950 mm (0.073–0.077 in.)	1.800 mm (0.071 in.)
	Width of sealing ring groove		2.025–2.060 mm (0.079–0.081 in.)	2.080 mm (0.082 in.)
	Clutch feed pipe O.D.	3rd clutch	5.97–5.98 mm (0.2350–0.2354 in.)	5.95 mm (0.2343 in.)
		4th clutch	11.47–11.48 mm (0.4516–0.4520 in.)	11.45 mm (0.4508 in.)
	Clutch feed pipe bushing I.D.	3rd clutch	6.018–6.030 mm (0.2369–0.2374 in.)	6.045 mm (0.2380 in.)
		4th clutch	11.500–11.518 mm (0.4528–0.4535 in.)	11.530 mm (0.4539 in.)

Item	Measurement	Qualification	Standard or New	Service Limit
Countershaft	Diameter of needle bearing contact area	at 4th gear	34.975 – 34.991 mm (1.3770 – 1.3776 in.)	When worn or damaged
		at 2nd gear	39.979 – 40.000 mm (1.5740 – 1.5748 in.)	When worn or damaged
		at park gear	41.964 – 41.980 mm (1.6521 – 1.6528 in.)	When worn or damaged
		at right end	38.505 – 38.515 mm (1.5159 – 1.5163 in.)	When worn or damaged
	I.D. of 4th gear		41.000 – 41.016 mm (1.6142 – 1.6148 in.)	When worn or damaged
	I.D. of idler gear		50.000 – 50.016 mm (1.9685 – 1.9691 in.)	When worn or damaged
	I.D. of reverse gear		46.000 – 46.016 mm (1.8110 – 1.8116 in.)	When worn or damaged
	End play of 1st gear		0.00 – 0.33 mm (0.000 – 0.013 in.)	—
	End play of 4th gear		0.04 – 0.27 mm (0.002 – 0.011 in.)	—
	End play of idler gear		0.015 – 0.045 mm (0.0006 – 0.0018 in.)	—
	End play of reverse gear		0.10 – 0.25 mm (0.004 – 0.010 in.)	—
	Length of distance collar		53.92 – 53.96 mm (2.123 – 2.124 in.)	—
	Cotter thickness		1.99 – 2.02 mm (0.078 – 0.080 in.)	—
	Reverse selector hub O.D.		55.87 – 55.90 mm (2.1996 – 2.2008 in.)	When worn or damaged

Standards and Service Limits

Automatic Transmission and Differential (cont'd)

Item	Measurement	Qualification	Standard or New	Service Limit
Secondary shaft	Diameter of needle bearing contact area	at 1st gear	37.978 – 37.993 mm (1.4952 – 1.4958 in.)	When worn or damaged
		at 2nd gear	33.986 – 33.999 mm (1.3380 – 1.3385 in.)	When worn or damaged
	I.D. of 1st gear		44.000 – 44.016 mm (1.7323 – 1.7329 in.)	When worn or damaged
	I.D. of 2nd gear		40.000 – 40.016 mm (1.5748 – 1.5754 in.)	When worn or damaged
	End play of 1st gear		0.07 – 0.15 mm (0.003 – 0.006 in.)	— —
	End play of 2nd gear		0.04 – 0.12 mm (0.002 – 0.005 in.)	— —
	38 x 56.5 mm splined washer thickness	No. 1	6.85 mm (0.270 in.)	When worn or damaged
		No. 2	6.90 mm (0.272 in.)	When worn or damaged
		No. 3	6.95 mm (0.274 in.)	When worn or damaged
		No. 4	7.00 mm (0.276 in.)	When worn or damaged
		No. 5	7.05 mm (0.278 in.)	When worn or damaged
		No. 6	7.10 mm (0.280 in.)	When worn or damaged
	37 x 55 mm thrust shim thickness	No. 1	4.90 mm (0.193 in.)	When worn or damaged
		No. 2	4.95 mm (0.195 in.)	When worn or damaged
		No. 3	5.00 mm (0.197 in.)	When worn or damaged
		No. 4	5.05 mm (0.199 in.)	When worn or damaged
		No. 5	5.10 mm (0.201 in.)	When worn or damaged
		No. 6	5.15 mm (0.203 in.)	When worn or damaged
		No. 7	5.20 mm (0.205 in.)	When worn or damaged
	Cotter thickness		1.99 – 2.02 mm (0.078 – 0.080 in.)	— —
	Sealing ring thickness		1.890 – 1.950 mm (0.074 – 0.077 in.)	1.800 mm (0.071 in.)
	Width of sealing ring groove		2.025 – 2.060 mm (0.080 – 0.081 in.)	2.080 mm (0.082 in.)
	Clutch feed pipe O.D.		7.97 – 7.98 mm (0.3138 – 0.3142 in.)	7.95 mm (0.3130 in.)
	Clutch feed pipe bushing I.D.		8.000 – 8.015 mm (0.3150 – 0.3156 in.)	8.030 mm (0.3161 in.)
Reverse idler gear	Diameter of needle bearing contact area	at reverse idler gear shaft	13.990 – 14.000 mm (0.5508 – 0.5512 in.)	When worn or damaged
	End play		0.03 – 0.36 mm (0.001 – 0.014 in.)	— —
	I.D.		18.007 – 18.020 mm (0.7089 – 0.7094 in.)	When worn or damaged
	Thrust washer thickness	Transmission housing side	0.97 – 1.03 mm (0.038 – 0.041 in.)	— —
		Reverse idler gear shaft holder side	0.97 – 1.03 mm (0.038 – 0.041 in.)	— —
	I.D. of reverse idler gear shaft holder		14.006 – 14.024 mm (0.5514 – 0.5521 in.)	When worn or damaged
	I.D. of transmission housing of reverse idler gear shaft contact area		14.006 – 14.024 mm (0.5514 – 0.5521 in.)	— —

Item	Measurement	Qualification	Standard or New			
			Wire Diameter	O.D.	Free Length	No. of Coils
Main valve body springs (see page 14-161)	Modulator valve spring		1.6 mm (0.063 in.)	10.4 mm (0.409 in.)	33.5 mm (1.319 in.)	9.8
	Shift valve C spring		0.8 mm (0.031 in.)	6.6 mm (0.260 in.)	49.1 mm (1.933 in.)	21.7
	Shift valve D spring		0.7 mm (0.028 in.)	6.6 mm (0.260 in.)	35.7 mm (1.406 in.)	17.2
	Shift valve E spring		0.7 mm (0.028 in.)	6.6 mm (0.260 in.)	32.2 mm (1.268 in.)	13.4
	Relief valve spring		1.1 mm (0.043 in.)	8.6 mm (0.339 in.)	30.1 mm (1.185 in.)	10.7
	Lock-up shift valve spring		0.9 mm (0.035 in.)	7.6 mm (0.299 in.)	63.0 mm (2.480 in.)	22.4
	Cooler check valve spring		0.6 mm (0.024 in.)	5.8 mm (0.228 in.)	14.5 mm (0.571 in.)	6.8
	Torque converter check valve spring		1.2 mm (0.047 in.)	8.6 mm (0.339 in.)	35.1 mm (1.382 in.)	14.3
	Servo control valve spring		0.7 mm (0.028 in.)	6.6 mm (0.260 in.)	35.7 mm (1.406 in.)	17.2
	Reverse CPC valve spring		0.7 mm (0.028 in.)	6.1 mm (0.240 in.)	17.8 mm (0.701 in.)	7.9
Regulator valve body springs (see page 14-164)	Stator reaction spring		5.5 mm (0.217 in.)	37.4 mm (1.472 in.)	30.3 mm (1.193 in.)	2.12
	Regulator valve spring A		1.8 mm (0.071 in.)	14.7 mm (0.579 in.)	87.5 mm (3.445 in.)	16.5
	Regulator valve spring B		1.7 mm (0.067 in.)	9.4 mm (0.370 in.)	44.0 mm (1.732 in.)	13.4
	Lock-up control valve spring		0.7 mm (0.028 in.)	6.6 mm (0.260 in.)	42.9 mm (1.689 in.)	14.2
	Lock-up timing valve spring		0.65 mm (0.026 in.)	6.6 mm (0.260 in.)	34.8 mm (1.370 in.)	15.6
Servo body springs (see page 14-165)	Shift valve B spring		0.8 mm (0.031 in.)	7.1 mm (0.280 in.)	40.4 mm (1.591 in.)	16.9
	Shift valve A spring		0.8 mm (0.031 in.)	7.1 mm (0.280 in.)	40.4 mm (1.591 in.)	16.9
	CPC valve A spring		0.7 mm (0.028 in.)	6.1 mm (0.240 in.)	17.8 mm (0.701 in.)	7.9
	CPC valve B spring		0.7 mm (0.028 in.)	6.1 mm (0.240 in.)	17.8 mm (0.701 in.)	7.9
	4th accumulator spring A		2.6 mm (0.102 in.)	19.6 mm (0.772 in.)	66.4 mm (2.614 in.)	9.7
	4th accumulator spring B		2.4 mm (0.094 in.)	12.8 mm (0.504 in.)	51.5 mm (2.028 in.)	11.5
	3rd accumulator spring A		2.6 mm (0.102 in.)	19.6 mm (0.772 in.)	66.4 mm (2.614 in.)	9.7
	3rd accumulator spring B		2.4 mm (0.094 in.)	12.8 mm (0.504 in.)	51.5 mm (2.028 in.)	11.5
Accumulator body springs (see page 14-166)	1st accumulator spring B		2.7 mm (0.106 in.)	15.0 mm (0.591 in.)	52.5 mm (2.067 in.)	10.3
	1st accumulator spring A		2.5 mm (0.098 in.)	21.6 mm (0.850 in.)	87.5 mm (3.445 in.)	11.8
	2nd accumulator spring B		2.4 mm (0.094 in.)	12.6 mm (0.496 in.)	53.5 mm (2.106 in.)	12.9
	2nd accumulator spring A		2.7 mm (0.106 in.)	19.6 mm (0.772 in.)	66.3 mm (2.610 in.)	9.9

Standards and Service Limits

Automatic Transmission and Differential (cont'd)

Item	Measurement	Qualification	Standard or New	Service Limit
A/T differential carrier	Pinion shaft contact area I.D.		18.010 – 18.028 mm (0.7091 – 0.7098 in.)	———
	Carrier-to-pinion shaft clearance		0.023 – 0.057 mm (0.001 – 0.002 in.)	0.1 mm (0.004 in.)
	Driveshaft contact area I.D.		30.025 – 30.045 mm (1.182 – 1.183 in.)	———
	Carrier-to-driveshaft clearance		0.045 – 0.086 mm (0.002 – 0.003 in.)	0.12 mm (0.005 in.)
	Carrier-to-intermediate shaft clearance		0.080 – 0.116 mm (0.003 – 0.005 in.)	———
	Tapered roller bearing starting torque (preload)	For new bearing	2.7 – 3.9 N·m (28 – 40 kgf·cm, 24 – 35 lbf·in.)	Adjust
		For used bearing	2.5 – 3.6 N·m (25 – 37 kgf·cm, 22 – 32 lbf·in.)	Adjust
A/T differential pinion gear	Backlash		0.05 – 0.15 mm (0.002 – 0.006 in.)	———
	I.D.		18.042 – 18.066 mm (0.7103 – 0.7113 in.)	———
	Pinion gear-to-pinion shaft clearance		0.055 – 0.095 mm (0.0022 – 0.0037 in.)	0.12 mm (0.005 in.)

Steering

Item	Measurement	Qualification	Standard or New	Service Limit
Steering wheel	Rotational play measured at outside edge	With engine running	0 – 10 mm (0 – 0.39 in.)	———
	Starting load measured at outside edge	With engine running	30 N (3.1 kgf, 6.8 lbs)	———
Gearbox	Angle of rack guide screw loosened from locked position		60° ± 5°	
Pump	Output pressure with shut-off valve closed		7,600 – 8,300 kpa (78 – 85 kgf/cm², 1,110 – 1,210 psi)	
Power steering fluid	Capacity	Use Genuine Honda Power Steering Fluid	For fluid change: 0.4 ℓ (0.42 US pt, 0.35 Imp qt)	
			For system overhaul: 1.1 ℓ (1.16 US qt, 0.97 Imp qt)	
Power steering pump belt NOTE: Adjust a new belt to the new belt spec, run the engine for 5 minutes, then readjust it to the used belt spec.	Deflection with 98 N (10 kgf, 22 lbs) applied mid-way between pulleys		Used belt: 13.0 – 16.5 mm (0.51 – 0.65 in.)	
			New belt: 8.5 – 11.0 mm (0.34 – 0.43 in.)	
	Tension (measured with belt tension gauge)		Use belt: 390 – 540 N (40 – 55 kgf, 88 – 120 lbs))	
			New belt: 740 – 880 N (75 – 90 kgf, 170 – 200 lbs))	

Suspension

Item	Measurement	Qualification	Standard or New	Service Limit
Wheel alignment	Camber	Front	0°00′±1°	
		Rear	−0°30′±1°	
	Caster	Front	2°48′±1°	
	Total Toe	Front	0±2 mm (0±1/16 in.)	
		Rear	IN 2±2 (1/16±1/16 in.)	
	Front wheel turning angle	Inside wheel	38°32′±2°	
		Outside wheel	31°03′ (Reference)	
Aluminum wheel	Runout	Axial	0−0.7 mm (0−0.03 in.)	2.0 mm (0.08 in.)
		Radial	0−0.7 mm (0−0.03 in.)	1.5 mm (0.06 in.)
Steel wheel	Runout	Axial	0−1.0 mm (0−0.04 in.)	2.0 mm (0.08 in.)
		Radial	0−1.0 mm (0−0.04 in.)	1.5 mm (0.06 in.)
Wheel bearings	End play	Front	0−0.05 mm (0−0.002 in.)	
		Rear	0−0.05 mm (0−0.002 in.)	

Brakes

Item	Measurement	Qualification	Standard or New	Service Limit
Parking brake lever	Distance travelled when pulled with 196 N (20 kgf, 44 lbs) of force		6−9 clicks	
Brake pedal	Pedal height (carpet removed)		148 mm (5 13/16 in.)	
	Free play		1−5 mm (1/16−3/16 in.)	
Master cylinder	Piston-to-pushrod clearance		0−0.4 mm (0−0.02 in.)	
Brake disc	Thickness	Front	22.9−23.1 mm (0.90−0.91 in.)	21.0 mm (0.83 in.)
		Rear	8.9−9.1 mm (0.35−0.36 in.)	8.0 mm (0.31 in.)
	Runout	Front	—	0.10 mm (0.004 in.)
		Rear	—	0.10 mm (0.004 in.)
	Parallelism	Front and rear		0.015 mm (0.0006 in.)
Brake pads	Thickness	Front	10.5−11.5 mm (0.41−0.45 in.)	1.6 mm (0.06 in.)
		Rear	8.9−9.1 mm (0.355−0.358 in.)	1.6 mm (0.06 in.)

Air Conditioning

Item	Measurement	Qualification	Standard or New	Service Limit
Refrigerant	Type		HFC-134a (R-134a)	
	Capacity or system		450−500 g (15.2−16.9 oz)	
Refrigerant oil	Type		DENSO: ND-OIL 8 (P/N 38897-PR7-A01AH or 38899-PR7-A01)	
	Capacity of components	Condenser	25 mℓ (5/6 fl oz, 0.9 Imp oz)	
		Evaporator	40 mℓ (1 1/3 fl oz, 1.4 Imp oz)	
		Each line and hose	10 mℓ (1/3 fl oz, 0.4 Imp oz)	
		Receiver	10 mℓ (1/3 fl oz, 0.4 Imp oz)	
		Compressor	160−175 mℓ (5 1/3−6 fl oz, 5.6−6.2 Imp oz)	
Compressor (DENSO)	Starter coil resistance	at 68°F (20°C)	3.4−3.8 Ω	
	Pulley-to-pressure plate clearance		0.5±0.15 mm (0.02±0.006 in.)	

Design Specifications

Item	Measurement	Qualification	Specification
DIMENSIONS	Overall length	4-door	4,795 mm (188.8 in.)
		2-door	4,745 mm (186.8 in.)
	Overall width		1,785 mm (70.3 in.)
	Overall height	4-door	1,455 mm (57.3 in.)
		2-door	1,405 mm (55.3 in.)
	Wheelbase	4-door	2,715 mm (106.9 in.)
		2-door	2,670 mm (105.1 in.)
	Track	Front	1,555 mm (61.2 in.)
		Rear	1,535 mm (60.4 in.)
	Ground clearance		158 mm (6.2 in.)
	Seating capacity		Five
WEIGHT (U.S.A.)	Gross Vehicle Weight Rating (GVWR)	4-door	4,235 lbs
		2-door	4,190 lbs
WEIGHT (CANADA)	Gross Vehicle Weight Rating (GVWR)	4-door	1,920 kg
		2-door	1,900 kg
ENGINE	Type		Water-cooled, 4-stroke SOHC VTEC V6 gasoline engine
	Cylinder arrangement		60° V6-cylinder, transverse
	Bore and stroke		86.0 x 86.0 mm (3.39 x 3.39 in.)
	Displacement		2,997 cm^3 (mℓ) (183 cu in.)
	Compression ratio		9.4
	Valve train		Belt driven, SOHC VTEC 4 valves per cylinder
	Lubrication system		Forced, wet sump, with trochoid pump
	Oil pump displacement	at 6,000 engine rpm	58.4 ℓ (61.7 US qt, 51.4 Imp qt)/minute
	Water pump displacement	at 6,000 engine rpm	172 ℓ (182 US qt, 151 Imp qt)/minute
	Fuel required		UNLEADED gasoline with 86 pump octane number or higher
STARTER	Type		Gear reduction
	Normal output		1.6 kW
	Nominal voltage		12 V
	Hour rating		30 seconds
	Direction of rotation		Clockwise as viewed from gear end
AUTOMATIC TRANSMISSION	Type		Electronically controlled automatic, 4-speed forward, 1 reverse
	Primary reduction		Direct 1:1
	Gear ratio	1st	2.534
		2nd	1.502
		3rd	0.947
		4th	0.608
		Reverse	1.846
	Final reduction	Type	Single helical gear
		Gear ratio	4.200

Item	Measurement	Qualification	Specification
STEERING	Type		Power-assisted rack and pinion
	Overall ratio		15.77
	Turns, lock-to-lock		3.05
	Steering wheel diameter		380 mm (15.0 in.)
SUSPENSION	Type	Front	Independent double wishbone, coil spring with stabilizer
		Rear	Five-link double wishbone
	Shock absorber	Front and rear	Telescopic, hydraulic, nitrogen gas-filled
WHEEL ALIGNMENT	Camber	Front	0°
		Rear	−0°30′
	Caster	Front	2°48′
	Total toe	Front	0 mm (0 in.)
		Rear	In 2 mm (1/16 in.)
BRAKES	Type of service brake	Front	Power-assisted self-adjusting ventilated disc
		Rear	Power-assisted self-adjusting solid disc
	Type of parking brake		Mechanical actuating, rear wheels
	Pad friction surface area	Front	59 cm^2 x 2 (9.0 sq in. x 2)
		Rear	28 cm^2 x 2 (4.3 sq in. x 2)
TIRES	Size of front and rear tires		P205/65 R15 92V
	Size of spare tires		T135/90D15 100M
AIR CONDITIONING	Cooling capacity		5,240 Kcal/h (20,800 BTU/h)
	Compressor	Type/Manufacturer	Swash plate/DENSO
		Number of cylinders	10
		Capacity	177.7 mℓ/rev. (10.84 cu in/rev.)
		Maximum speed	7,600 rpm
		Lubricant capacity	160 mℓ (5 1/3 fl oz)
		Lubricant type	ND-OIL 8
	Condenser	Type	Corrugated fin
	Evaporator	Type	Corrugated fin
	Blower	Type	Sirocco fan
		Motor input	230 W/12 V
		Speed control	Manual A/C: 4-speed Auto A/C: Infinite variable
		Maximum capacity	520 m^3/h (18,300 cu ft/h)
	Temperature control		Air-mix type
	Compressor clutch	Type	Dry, single plate, Poly-V belt drive
		Electrical power consumption at 68°F (20°C)	40 W maximum at 12 V
	Refrigerant	Type	HFC-134 a (R-134 a)
		Quantity	450 − 500 g (15.2 − 16.9 fl oz)

Design Specifications

Item	Measurement	Qualification	Specification
ELECTRICAL RATINGS	Battery		12 V—55 AH/5 hours
	Starter		12 V—1.6 kW
	Alternator		12 V—100A
	Fuses	Under-hood fuse/relay box	100A, 50A, 40A, 30A, 20A, 15A
		Under-dash driver's fuse/relay box	30A, 15A, 10A, 7.5A
		Under-dash passenger's fuse/relay box	30A, 20A, 10A, 7.5A
	Light bulbs	Headlight high beam	12 V—60 W
		Headlight low beam	12 V—51 W
		Front turn signal/Front side marker lights	12 V—24 W/2.2 CP (candlepower) (two filaments)
		Front parking lights	12 V — 3 CP
		Rear turn signal lights	12 V—21 W
		Brake/Taillights	12 V—21/5 W
		Taillight	12 V — 3 CP
		High mount brake light	12 V—21 W
		Back-up lights	12 V—21 W
		License plate light	12 V—3 CP
		Ceiling light	12 V—8 W
		Trunk lights	12 V—5 W
		Door courtesy lights	12 V—2 CP
		Vanity mirror lights	12 V—1.1 W
		Glove box light	12 V—3.4 W
		Spotlights	12 V—4 CP
		Gauge lights	12 V— 1.26 W, 3.78 W
		Indicator lights	12 V—LED,14 V—0.56 W, 0.7 W, 1.4 W
		Panel and pilot lights	14 V—0.56 W, 0.84 W
		Heater control panel lights	8 V—1.2 W, 14 V—1.12 W, 1.4W

Body Specifications

4-door sedan

Unit: mm (in.)

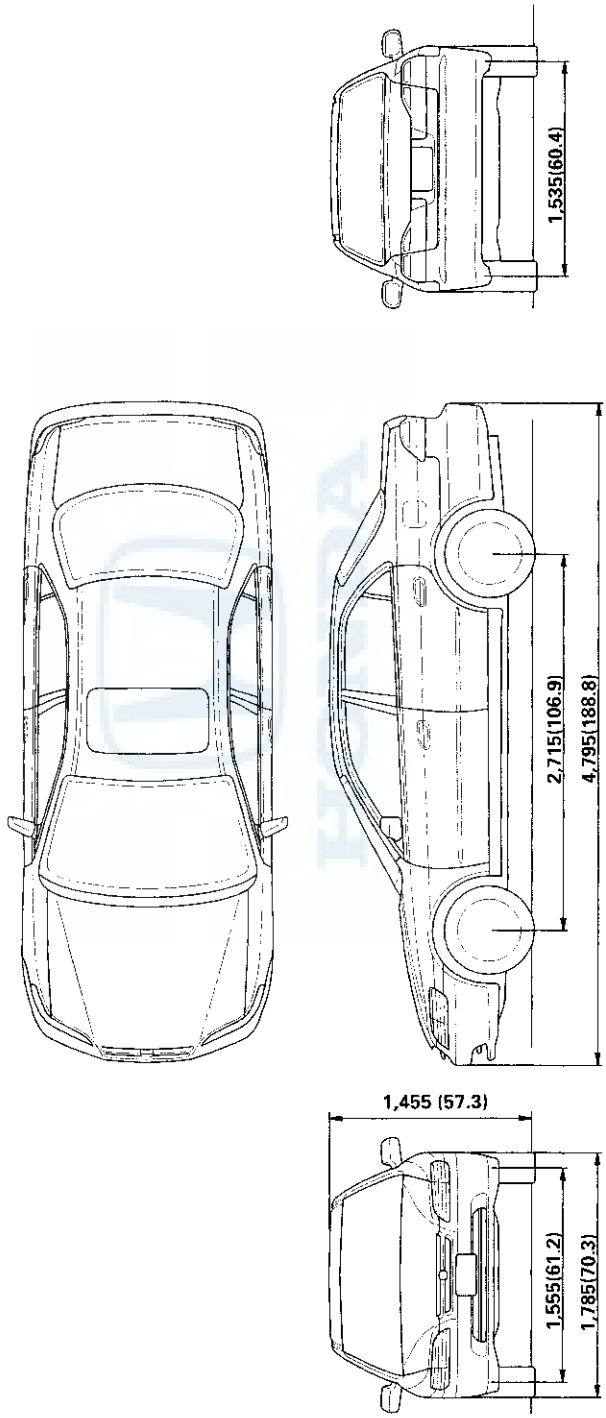

(cont'd)

(cont'd)

2-door coupe

Unit: mm (in.)

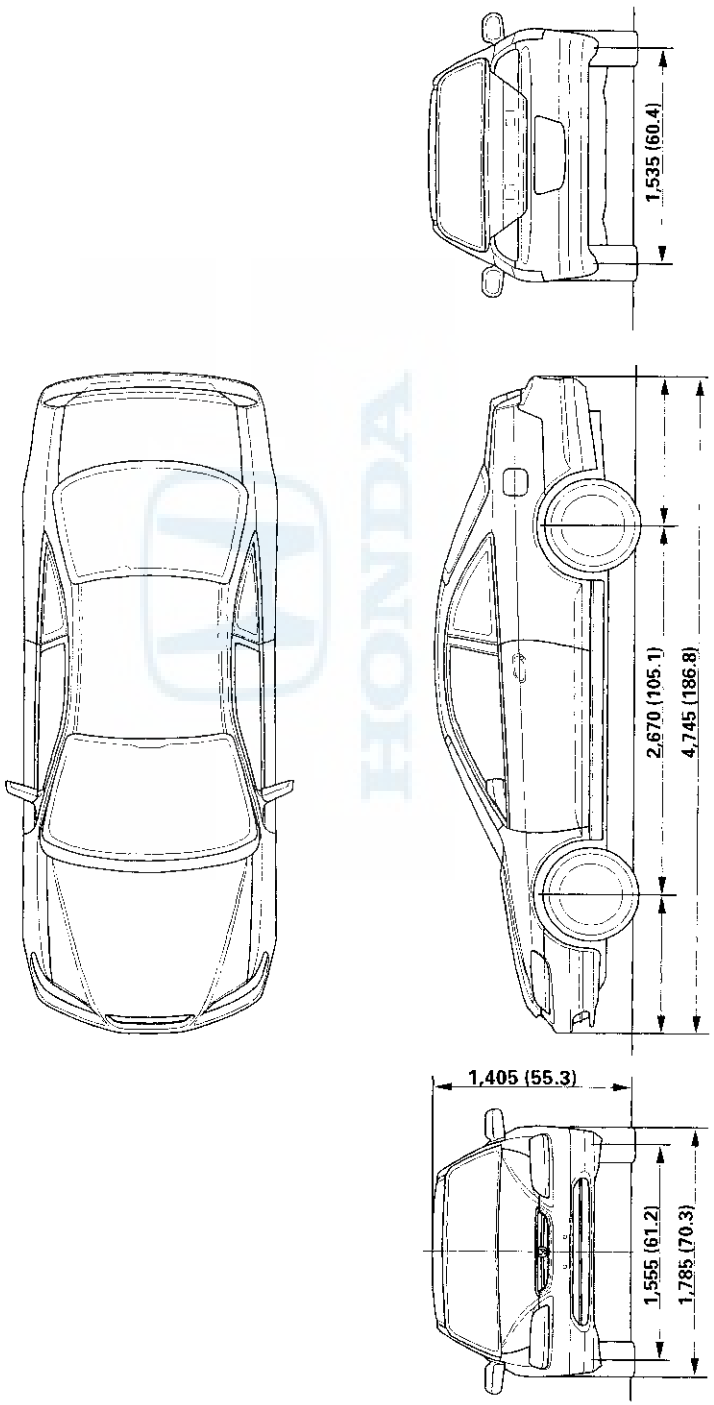

Maintenance

Lubricants and Fluids

For details of lubrication points and type of lubricants to be applied, refer to the illustrated index and various work procedure (such as Assembly/Reassembly, Replacement, Overhaul, Installation, etc.) contained in each section.

NO.	LUBRICATION POINTS	LUBRICANT
1	Engine	API Service Grade: Use SJ "Energy Conserving" grade oil. The oil container may also display the API Certification seal shown below. Make sure it says "For Gasoline Engines." SAE Viscosity: See chart below.
2	Transmission	Honda ATF-Z1*1
3	Brake line (includes ABS line)	Genuine Honda DOT 3 Brake Fluid*2
4	Power steering gearbox	Steering grease P/N 08733-B070E
5	Throttle cable end (Dashboard lower panel hole)	Silicone grease
6	Throttle cable end (Throttle link)	Multi-purpose grease
7	Brake master cylinder pushrod	
8	Pedal linkage	
9	Battery terminals	
10	Fuel fill lid	
11	Hood hinges and hood latch	Honda White Lithium Grease
12	Trunk hinges and latch	
13	Door hinges, upper and lower	
14	Door opening detent	
15	Caliper piston boot, caliper pins, and boots.	Silicone grease
16	Brake line joints (Front and rear wheelhouse)	Rust preventives
17	Power steering system	Genuine Honda Power Steering Fluid*3
18	Air conditioning compressor	Compressor oil: DENSO: ND-OIL 8 (P/N 38897-PR7-A01AH or 38899-PR7-A01) For Refrigerant: HFC-134 a (R-134 a)

API SERVICE LABEL

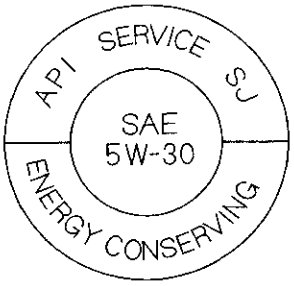

API CERTIFICATION SEAL

Recommended Engine Oil
Engine oil viscosity for ambient temperature ranges

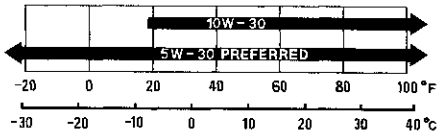

*1: Always use Honda ATF-Z1. Using a non-Honda ATF can affect shift quality.
*2: Always use Genuine Honda DOT 3 Brake Fluid. Using a non-Honda brake fluid can cause corrosion and decrease the life of the system.
*3: Always use Genuine Honda Power Steering Fluid. Using any other type of power steering fluid or automatic transmission fluid can cause increased wear and poor steering in cold weather.

NOTE:
Lubricate all hinges, latches, and locks once a year.
In corrosive areas, more frequent lubrication is necessary.
We recommend Honda White Lithium Grease.

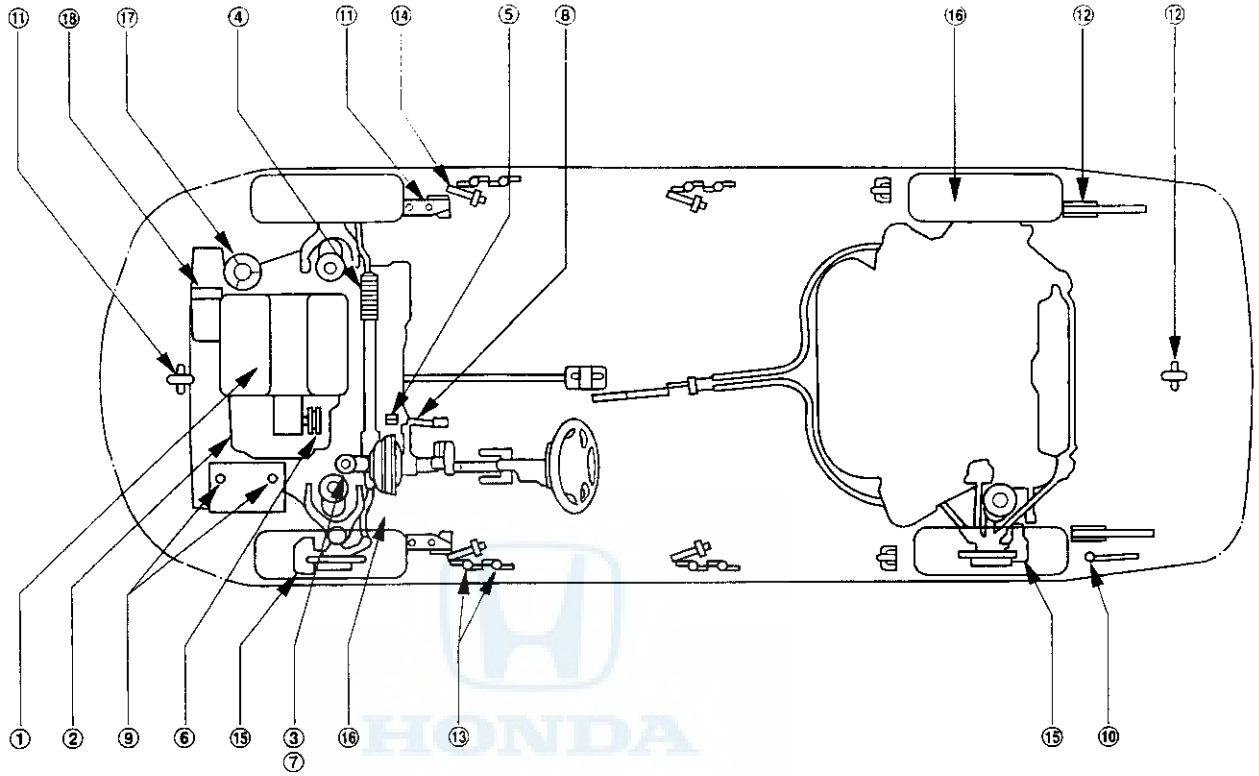
⑪
⑱
⑰
④
⑪
⑭
⑤
⑧
⑯
⑫
⑫
①
②
⑨
⑥
⑮
③
⑦
⑯
⑬
⑮
⑩

Maintenance Schedule for Normal Conditions (1998-2000 Models)

Listed by Distance/Time

Service at the indicated distance or time, whichever comes first.

7,500 mi/ 12,000 km/–	☐ Do items in A.
15,000 mi/ 24,000 km/ 1 year	☐ Do items in A and B.
22,500 mi/ 36,000 km/–	☐ Do items in A.
30,000 mi/ 48,000 km/ 2 years	☐ Do items in A, B, and C.
37,500 mi/ 60,000 km/ —	☐ Do items in A.
45,000 mi/ 72,000 km/ 3 years	
☐ Replace coolant (see page 10-10). Capacity: 5.6 ℓ (5.9 US qt, 4.9 Imp qt). Use Honda All Season Antifreeze/coolant Type 2.	
☐ Replace brake fluid. Use Genuine Honda DOT 3 Brake Fluid. Fill to between marks on reservoir.	
☐ Do items in A and B.	
52,500 mi/ 84,000 km/	☐ Do items in A.
60,000 mi/ 96,000 km/4 years	☐ Do items in A, B, and C.
67,500 mi/108,000 km/	☐ Do items in A.
75,000 mi/120,000 km/ 5 years	
☐ Replace coolant (see page 10-10). Capacity: 5.6 ℓ (5.9 US qt, 4.9 Imp qt). Use Use Honda All Season Antifreeze/coolant Type 2.	
☐ Do items in A and B.	
82,500 mi/132,000 km/—	☐ Do items in A.
90,000 mi/144,000 km/ 6 years	
☐ Replace transmission fluid. 2.9 ℓ (3.1 US qt, 2.6 Imp qt). Use Honda ATF-Z1 (see page 14-113).	
☐ Replace brake fluid. Use Genuine Honda DOT 3. Fill to between marks on reservoir.	
☐ Do items in A, B, and C.	
97,500 mi/156,000 km/ —	☐ Do items in A.
105,000 mi/168,000 km/ 7 years	
☐ Inspect valve clearance (cold) (see page 6-13). Intake: 0.20 – 0.24 mm (0.008 – 0.009 in.), Exhaust: 0.28 – 0.32 mm (0.011 – 0.013 in.)	
☐ Replace spark plugs (see page 4-24). Use NGK (PZFR5F-11) or DENSO (PKJ 16CR-L11). GAP: 1.0 – 1.1 mm (0.039 – 0.043 in)	
☐ Replace timing belt (see page 6-19) and inspect water pump (see page 10-10).	
☐ Check idle speed. Should be 680 ± 50 rpm in N or P position (see page 11-68).	
☐ Replace coolant (see page 10-10). Capacity: 5.6 ℓ (5.9 US qt, 4.9 Imp qt). Use Honda All Season Antifreeze/coolant Type 2.	
☐ Do items in A and B.	
112,500 mi/181,000 km/ —	☐ Do items in A.
120,000 mi/192,000 km/ 8 years	☐ Do the items in A, B, and C.

Do the items in parts A, B, and C as required for mileage/time interval listed.

A

- ☐ Replace engine oil (see page 8-5). Capacity with filter change: 4.4 ℓ (4.6 US qt, 3.9 imp qt)
- ☐ Rotate tires. Follow the pattern shown in the Owner's Manual — Check tire inflation and condition.

B

- ☐ Replace engine oil filter (see page 8-5).
- ☐ Inspect front and rear brakes (see page 19-2).
  - Check pads and discs for wear (thickness), damage, and cracks.
  - Check calipers for damage, leaks, and tightness of mount bolts.
- ☐ Check parking brake adjustment. Should be fully applied within 6 to 9 clicks.
- ☐ Inspect tie rod ends, steering gearbox, and boots (see page 17-12).
  - Check rack grease and steering linkage.
  - Check boots for damage and leaking grease.
  - Check fluid line for damage and leaks.
- ☐ Inspect suspension components.
  - Check bolts for tightness.
  - Check condition of ball joint boots for deterioration and damage.
- ☐ Inspect driveshaft boots. Check boots for cracks and boot bands for tightness (see page 16-3)*[1].
- ☐ Inspect brake hoses and lines (including ABS). Check the master cylinder, proportioning control valve, and ABS modulator for damage and leakage.
- ☐ Check all fluid levels and condition of fluids; check for leaks. If necessary, add ATF (see page 14-112), engine coolant, brake fluid, and windshield washer fluid.
- ☐ Inspect cooling system hoses and connections.
  - Check for damage, leaks, and deterioration.
  - Check for proper fan operation.
- ☐ Inspect exhaust system* . Check catalytic converter heat shield, exhaust pipe, and muffler for damage, leaks, and tightness (see page 9-4).
- ☐ Inspect fuel lines and connections*. Check for loose connections, cracks and deterioration; retighten loose connections and replace damaged parts (see page 11-73).

C

- ☐ Replace air cleaner element.
- ☐ Inspect and adjust drive belt.
  - Look for cracks and damage, then check belt deflection by pushing on it (about 22 lbs) midway between the pulleys.
    - P/S pump belt: 13.0 – 16.5 mm (0.51 – 0.65 in) (see page 17-10).
- ☐ Replace the air conditioning filter (see page 21-26)*[1].
  - Replace it twice as often (at 15,000 mile interval) if the vehicle is driven mostly in urban areas that have high concentrations of soot in the air from industry and diesel-powered vehicles.
  - Replace it whenever airflow from the climate control system is less than normal.

According to state and federal regulations, failure to do the maintenance service items marked with asterisk (*) will not void customer's emissions warranties. However, Honda recommends that all maintenance services be done at the recommended interval to ensure long-term reliability.

*[1]: Refer to '98-01 ACCORD Service Manual (P/N 61S8008)

Maintenance Schedule for Severe Conditions (1998-2000 Models)

Listed by Distance/Time

Service at the indicated distance or time, whichever comes first. Use this schedule if the vehicle is driven MAINLY in Canada or in any of the following conditions; if only OCCASIONALLY driven in these conditions, use the Normal Conditions schedule (see page 3-4).

Severe Driving Conditions

- Less than 5 miles (8 km) per trip or, in freezing temperatures, less than 10 miles (16 km) per trip
- In extremely; hot weather (over 90°F/32°C)
- Extensive idling or long periods of stop-and-go driving
- Trailer towing
- On muddy, dusty, or de-iced roads
- Driving in mountainous conditions

3,750 mi/ 6,000 km/ — ☐ Replace oil and filter.

7,500 mi/ 12,000 km/ — ☐ Do items in A.

11,250 mi/ 18,000 km/ — ☐ Replace oil and filter.

15,000 mi/ 24,000 km/ 1 year
- ☐ Clean air cleaner element with low pressure air.
- ☐ Do items in A and B.

18,750 mi/ 30,000 km/ — ☐ Replace oil and filter.

22,500 mi/ 36,000 km/ 1 1/2 years: ☐ Do items in A.

26,250 mi/ 42,000 km/ — ☐ Replace oil and filter

30,000 mi/ 48,000 km/ 2 years: ☐ Do items in A, B, and C

33,750 mi/ 54,000 km/ — ☐ Replace oil and filter.

37,500 mi/ 60,000 km/2 1/2 years: ☐ Do items in A.

41,250 mi/ 66,000 km/ — ☐ Replace oil and filter.

45,000 mi/ 72,000 km/ 3 years:
- ☐ Clean air cleaner element with low pressure air.
- ☐ Replace coolant (see page 10-10). Use Honda All Season Antifreeze/coolant Type 2. Capacity: 5.6 ℓ (5.9 US qt, 4.9 Imp qt).
- ☐ Replace brake fluid (see page 19-7)*[1].
  - Use Genuine Honda DOT 3.
  - Fill to between marks on reservoir.
- ☐ Do items in A and B.

48,750 mi/ 78,000 km/ — ☐ Replace oil and filter.

52,500mi/ 84,000 km 3 1/2 years: ☐ Do items in A.

56,250 mi/ 90,000 km/ — ☐ Replace oil and filter.

60,000 mi/ 96,000 km/ 4 years:
- ☐ Replace timing belt (see page 6-19) and inspect the water pump (see page 10-9) if the vehicle is regularly driven in weather over 110°F (43°C) or under −20°F (−29°C); If not, replace the belts at 105,000 miles.
- ☐ Do items in A, B and C.

63,750 mi/102,000 km/ — ☐ Replace oil and filter.

67,500 mi/108,000 km 4 1/2 years: ☐ Do items in A.

71,250 mi/114,000 km — ☐ Replace oil and filter.

75,000mi/120,000 km/5 years:
- ☐ Clean air cleaner element with low pressure air.
- ☐ Replace coolant (see page 10-10). Use Honda All Season Antifreeze/coolant Type 2. Capacity: 5.6 ℓ (5.9 US qt, 4.9 Imp qt)
- ☐ Do items in A and B.

78,750 mi/126,000 km/ — ☐ Replace oil and filter.

82,500 mi/132,000 km/5 1/2 years ☐ Do items in A.

86,250 mi/138,000 km/ — ☐ Replace oil and filter.

90,000 mi/144,000 km/ 6 years:
- ☐ Replace brake fluid (see page 19-7)*[1]. Use Genuine Honda DOT 3 brake fluid; fill to between marks on reservoir.
- ☐ Do items in A, B and C.

93,750 mi/150,000 km/ — ☐ Replace oil and filter.

97,500 mi/156,000 km/6 1/2 years: ☐ Do items in A.

101,250 mi/162,000 km/ — ☐ Replace oil and filter.

105,000 mi/168,000 km/ 7 years:
- ☐ Clean air cleaner element with low pressure air.
- ☐ Inspect valve clearance (cold) (see page 6-13)Intake: 0.20 − 0.24 mm (0.008 − 0.009 in.) Exhaust: 0.28 − 0.32 mm (0.011 − 0.013 in.)
- ☐ Replace spark plugs. Use NGK (PZFR5F-11) or DENSO (PKJ16CR-L11). Gap: 1.0 − 1.1 mm (0.039 − 0.043 in) (see page 4-24).
- ☐ Replace timing belt (see page 6-19), and inspect the water pump (see page 10-10) only if the belts was not replaced at 60,000 miles.
- ☐ Check idle speed (see page 11-68): 680 ± 50 rpm
- ☐ Replace coolant (see page 10-10). Use Honda All Season Antifreeze/coolant Type 2. Capacity: 5.6 ℓ (5.9 US qt, 4.9 Imp qt).
- ☐ Do items in A and B.

108,750 mi/174,000 km/ — ☐ Replace oil and filter.

112,500 mi/180,000 km/ 7 1/2 years: ☐ Do items in A.

116,250 mi/186,000 km/ — ☐ Replace oil and filter.

120,000 mi/192,000 km/ 8 years: ☐ Do items A, B, and C.

*[1]: Refer to '98-01 ACCORD Service Manual (P/N 61S8008)

Do the items in parts A, B, and C as required for mileage/time interval.

A

- ☐ Replace engine oil and filter (see page 8-5). -- Capacity with filter change: 4.4 ℓ (4.6 US qt, 3.9 Imp qt)
- ☐ Inspect front and rear brakes, every 6 months if vehicle is driven less than 7,500 mile per year (see page 19-2).
  - Check pads and discs for wear (thickness), damage, and cracks.
  - Check calipers for damage, leaks, and tightness of mount bolts.
- ☐ Rotate tires, if the vehicle has been driven the distance listed. Follow the pattern shown in the Owner's Manual. (Check tire inflation and condition.)
- ☐ Inspect tie rod ends, steering gearbox, and boots (see page 17-12).
  - Check rack grease and steering linkage.
  - Check boots for damage and leaking grease.
  - Check fluid lines for damage and leaks.
- ☐ Inspect suspension components.
  - Check bolts for tightness.
  - Check condition of ball joint boots for deterioration and damage.
- ☐ Inspect driveshaft boots. Check boots for cracks and boot bands for tightness (see page 16-3)*[1].

B

- ☐ Check parking brake adjustment. -- Should be fully applied within 6 to 9 clicks.
- ☐ Lubricate door locks and hinges with Honda white lithium grease.
- ☐ Inspect brake hoses and lines (including ABS). Check the master cylinder, proportioning control valve, and ABS modulator for damage and leakage (see page 19-30)*[1].
- ☐ Check fluid levels and condition of fluids; check for leaks. If necessary, add ATF (see page 14-112), engine coolant, brake fluid, and windshield washer fluid.
- ☐ Inspect cooling system hoses and connections.
  - Check for damage, leaks, and deterioration.
  - Check for proper fan operation.
- ☐ Inspect exhaust system.* Check catalytic converter heat shield, exhaust pipe, and muffler for damage, leaks, and tightness (see page 9-4).
- ☐ Inspect fuel lines and connections.* Check for loose connections, cracks and deterioration; retighten loose connections and replace damaged parts (see page 11-73).
- ☐ Check all lights. Check function of all interior and exterior lights, and the positions of the headlights (see page 22-98)*[1].
- ☐ Inspect the vehicle underbody. Check the paint for damage, scratches, stone chipping, and dents.

C

- ☐ Replace air cleaner element.
- ☐ Inspect and adjust drive belt. Look for cracks and damage, then check tension by pushing on each belt (about 22 lbs) midway between the pulleys:
  - P/S pump belt: 13.0 – 16.5 mm (0.51 – 0.65 in) (see page 17-10)
- ☐ Replace air conditioning filter, every 15,000 miles if vehicle is driven mostly where air has high concentration of soot from industry and diesel-powered vehicles; also replace it anytime airflow is less than usual (see page 21-26)*[1].
- ☐ Replace transmission fluid. Use Honda ATF-Z1 (ATF).

According to state and federal regulations, failure to do the maintenance items marked with asterisk (*) will not void customer's emissions warranties. However, Honda recommends that all maintenance services be done at the recommended interval to ensure long-term reliability.
*[1]: Refer to '98-00 ACCORD Service Manual (P/N 61S8005)

Maintenance Schedule for Normal and Severe Conditions (1998-2000 Models)

Listed by Maintenance Item

Service at the indicated distance or time, whichever comes first.
- If driven in normal conditions, do items with a dot (●).
- If driven in severe conditions (see page 3-6) or normally driven in Canada, do items with a circle (○) and items with a dot (●).

Service at the indicated distance or time, whichever comes first.	miles x 1000	3.75	7.5	11.25	15	18.75	22.5	26.25	30	33.75	37.5
	km x 1000	6	12	18	24	30	36	42	48	54	60
	years	—	1/2	—	1	—	1 1/2	—	2	—	2 1/2
Replace engine oil		Normal Conditions: Every 7,500 miles (12,000 km) or 12 months Severe Conditions: Every 3,750 miles (6,000 km) or 6 months									
Replace engine oil filter		Normal Conditions: Every other oil change Severe Conditions: Every oil change									
Clean air cleaner element					○						
Replace air cleaner element									●		
Inspect valve clearance		Adjust only if noisy.									
Replace spark plugs											
Replace timing belt, NOTE 1 and inspect water pump											
Inspect and adjust drive belts									●		
Inspect idle speed*											
Replace engine coolant											
Replace transmission fluid									○		
Inspect front and rear brakes			○		●		○		●		○
Replace brake fluid											
Check parking brake adjustment					●				●		
Replace air conditioning filter NOTE 2									●		
Lubricate locks and hinges					○				○		
Rotate tires (Check tire inflation and condition at least once a month)			●		●		●		●		●
Inspect tie-rod ends, steering gearbox, and boots			○		●		○		●		○
Inspect suspension components			○		●		○		●		○
Inspect driveshaft boots			○		●		○		●		○
Inspect brake hoses and lines (including ABS)					●				●		
Inspect all fluid levels and condition of fluids					●				●		
Inspect cooling system hoses and connections					●				●		
Inspect exhaust system*					●				●		
Inspect fuel lines and connections*					●				●		
Check lights and controls					○				○		
Inspect vehicle under body					○				○		

NOTE:
1. If the vehicle is regularly driven in very hot or cold weather, over 110°F (43°C) or under 20°F (−29°C), replace this belt every 60,000 miles; If not, replace it at 105,000 miles.
2. Replace the air conditioning filter every 15,000 miles if the vehicle is driven mostly where air has a high concentration of soot from industry and diesel-powered vehicle; also replace it anytime airflow is less than usual.

* According to state and federal regulations, failure to do the maintenance items marked with an asterisk (*) will not void customer's emissions warranties. However, Honda recommends that all maintenance services be done at the recommended interval to ensure long-term reliability.

41.25	45	48.75	52.5	56.25	60	63.75	67.5	71.25	75	78.75	82.5	86.25	90	93.75	97.5	101.25	105	108.75	112.5	116.25	120
66	72	78	84	90	96	102	108	114	120	126	132	138	144	150	156	162	168	175	181	187	193
—	3	—	3 1/2	—	4	–	4 1/2	–	5	—	5 1/2	—	6	-	6 1/2	—	7	—	7 1/2	—	8
Normal Conditions: Every 7,500 miles (12,000 km) or 12 months Severe Conditions: Every 3,750 miles (6,000 km) or 6 months																					
Normal Conditions: Every other oil change Severe Conditions: Every oil change																					
	○								○								○				
					●								●								●
Adjust only if noisy.																	●				
																	●				
					○												●				○
					●								●								●
																	●				
	●								●								●				
					○								●								○
	●		○		●		○		●		○		●		○		●		○		●
	●												●								
	●				●				●				●				●				●
					●								●								●
	○				○				○				○				○				○
	●		●		●		●		●		●		●		●		●		●		●
	●		○		●		○		●		○		●		○		●		○		●
	●		○		●		○		●		○		●		○		●		○		●
	●		○		●		○		●		○		●		○		●		○		●
	●				●				●				●				●				●
	●				●				●				●				●				●
	●				●				●				●				●				●
	●				●				●				●				●				●
	●				●				●				●				●				●
	○				○				○				○				○				○
	○				○				○				○				○				○

Maintenance Schedule for Normal Conditions (2001 Model)

Listed by Distance/Time

Service at the indicated distance or time, whichever comes first.

7,500 mi/ 12,000 km/ --	☐ Do items in A.
15,000 mi/ 24,000 km/ 1 year	☐ Do items in A and B.
22,500 mi/ 36,000 km/—	☐ Do items in A.
30,000 mi/ 48,000 km/ 2 years	☐ Do items in A, B, and C.
37,500 mi/ 60,000 km/ ---	☐ Do items in A.
45,000 mi/ 72,000 km/ 3 years	☐ Do items in A, B, and D.
52,500 mi/ 84,000 km/ --	☐ Do items in A.
60,000 mi/ 96,000 km/4 years	☐ Do items in A, B, and C.
67,500 mi/108,000 km/ —	☐ Do items in A.
75,000 mi/120,000 km/ 5 years	☐ Do items in A and B.
82,500 mi/132,000 km/—	☐ Do items in A.
90,000 mi/144,000 km/ 6 years	☐ Do items in A, B, C, and D.
97,500 mi/156,000 km/ —	☐ Do items in A.

105,000 mi/168,000 km/ 7 years

- ☐ Inspect valve clearance (cold) (see page 6-13).
  Intake: 0.20 – 0.24 mm (0.008 – 0.009 in.), Exhaust: 0.28 – 0.32 mm (0.011 – 0.013 in.)
- ☐ Replace spark plugs (see page 4-24). Use NGK (PZFR5F-11) or DENSO (PKJ 16CR-L11).
  GAP: 1.0 – 1.1 mm (0.039 – 0.043 in)
- ☐ Replace timing belt (see page 6-19) and inspect water pump (see page 10-9).
- ☐ Check idle speed. Should be 680 ± 50 rpm in N or P position (see page 11-68).
- ☐ Do items in A and B.

112,500 mi/181,000 km/ ---	☐ Do items in A.
120,000 mi/192,000 km/ 8 years	☐ Do the items in A, B, and C.

120,000 mi/192,000 km/6 years

- ☐ Replace transmission fluid. Use Honda ATF-Z1 (ATF) (see page 14-113), thereafter every 90,000 miles (144,000 km) or 5 years

120,000 mi/192,000 km/10 years

- ☐ Replace coolant (see page 10-10). Use Honda All Season Antifreeze/coolant Type 2.
  Capacity: 5.6 ℓ (5.9 US qt, 4.9 Imp qt), thereafter every 60,000 miles (100,000 km) or 5 years.

Do the items in parts A, B, C, and D as required for mileage/time interval listed.

A

- ☐ Replace engine oil (see page 8-5). —Capacity with filter change: 4.4 ℓ (4.6 US qt, 3.9 Imp qt)
- ☐ Rotate tires. Follow the pattern shown in the Owner's Manual —Check tire inflation and condition.

B

- ☐ Replace engine oil filter (see page 8-5).
- ☐ Inspect front and rear brakes (see page 19-2).
  - Check pads and discs for wear (thickness), damage, and cracks.
  - Check calipers for damage, leaks, and tightness of mount bolts.
- ☐ Check parking brake adjustment. Should be fully applied within 6 to 9 clicks.
- ☐ Inspect tie rod ends, steering gearbox, and boots (see page 17-12).
  - Check rack grease and steering linkage.
  - Check boots for damage and leaking grease.
  - Check fluid line for damage and leaks.
- ☐ Inspect suspension components.
  - Check bolts for tightness.
  - Check condition of ball joint boots for deterioration and damage.
- ☐ Inspect driveshaft boots. Check boots for cracks and boot bands for tightness (see page 16-3)*[1].
- ☐ Inspect brake hoses and lines (including ABS). —Check the master cylinder, proportioning control valve, and ABS modulator for damage and leakage.
- ☐ Check all fluid levels and condition of fluids; check for leaks. If necessary, add ATF (see page 14-112), engine coolant, brake fluid, and windshield washer fluid.
- ☐ Inspect cooling system hoses and connections.
  - Check for damage, leaks, and deterioration.
  - Check for proper fan operation.
- ☐ Inspect exhaust system* . Check catalytic converter heat shield, exhaust pipe, and muffler for damage, leaks, and tightness (see page 9-4).
- ☐ Inspect fuel lines and connections*. Check for loose connections, cracks and deterioration; retighten loose connections and replace damaged parts (see page 11-73).

C

- ☐ Replace air cleaner element.
- ☐ Inspect and adjust drive belt.
  - Look for cracks and damage, then check belt deflection by pushing on it (about 22 lbs) midway between the pulleys.
    - P/S pump belt: 13.0—16.5 mm (0.51—0.65 in) (see page 17-10).
- ☐ Replace the air conditioning filter (see page 21-26)*[1].
  - Replace it twice as often (at 15,000 mile interval) if the vehicle is driven mostly in urban areas that have high concentrations of soot in the air from industry and diesel-powered vehicles.
  - Replace it whenever airflow from the climate control system is less than normal.

D

- ☐ Replace brake fluid every 3 years (Independent of Distance). Use Genuine Honda DOT 3. Fill to between marks on reservoir (see page 11-000).

According to state and federal regulations, failure to do the maintenance service items marked with asterisk (*) will not void customer's emissions warranties. However, Honda recommends that all maintenance services be done at the recommended interval to ensure long-term reliability.

*[1]: Refer to '98-01 ACCORD Service Manual (P/N 61S8008)

Maintenance Schedule for Severe Conditions (2001 Model)

Listed by Distance/Time

Service at the indicated distance or time, whichever comes first. Use this schedule if the vehicle is driven MAINLY in Canada or in any of the following conditions; if only OCCASIONALLY driven in these conditions, use the Normal Conditions schedule (see page 3-10).

Severe Driving Conditions

- Less than 5 miles (8 km) per trip or, in freezing temperatures, less than 10 miles (16 km) per trip
- In extremely; hot weather (over 90°F/32°C)
- Extensive idling or long periods of stop-and-go driving
- Trailer towing
- On muddy, dusty, or de-iced roads
- Driving in mountainous conditions

3,750 mi/ 6,000 km/ — ☐ Replace oil and filter.
7,500 mi/ 12,000 km/ — ☐ Do items in A.
11,250 mi/ 18,000 km/ — ☐ Replace oil and filter.
15,000 mi/ 24,000 km/ 1 year
☐ Clean air cleaner element with low pressure air.
☐ Do items in A and B.
18,750 mi/ 30,000 km/ — ☐ Replace oil and filter.
22,500 mi/ 36,000 km/ 1 1/2 years: ☐ Do items in A.
26,250 mi/ 42,000 km/ — ☐ Replace oil and filter
30,000 mi/ 48,000 km/ 2 years: ☐ Do items in A, B, and C
33,750 mi/ 54,000 km/ — ☐ Replace oil and filter.
37,500 mi/ 60,000 km/2 1/2 years: ☐ Do items in A.
41,250 mi/ 66,000 km/ — ☐ Replace oil and filter.
45,000 mi/ 72,000 km/ 3 years:
☐ Clean air cleaner element with low pressure air.
☐ Do items in A, B, and D.
48,750 mi/ 78,000 km/ — ☐ Replace oil and filter.
52,500mi/ 84,000 km 3 1/2 years: ☐ Do items in A.
56,250 mi/ 90,000 km/ — ☐ Replace oil and filter.
60,000 mi/ 96,000 km/ 4 years:
☐ Replace timing belt (see page 6-19) and inspect the water pump (see page 10-9) if the vehicle is regularly driven in weather over 110°F (43°C) or under −20°F (−29°C); If not, replace the belts at 105,000 miles.
☐ Do items in A, B and C.
60,000 mi/96,000 km/3 years
☐ Replace transmission fluid. Use Honda ATF-Z1 (ATF) (see page 14-xx), thereafter every 90,000 miles (144,000 km) or 5 years.
63,750 mi/102,000 km/ — ☐ Replace oil and filter.
67,500 mi/108,000 km 4 1/2 years: ☐ Do items in A.
71,250 mi/114,000 km — ☐ Replace oil and filter.
75,000mi/120,000 km/5 years:
☐ Clean air cleaner element with low pressure air.
☐ Do items in A and B.
78,750 mi/126,000 km/ — ☐ Replace oil and filter.
82,500 mi/132,000 km/5 1/2 years ☐ Do items in A.
86,250 mi/138,000 km/ — ☐ Replace oil and filter.
90,000 mi/144,000 km/ 6 years: ☐ Do items in A, B, C. and D.
93,750 mi/150,000 km/ — ☐ Replace oil and filter.
97,500 mi/156,000 km/6 1/2 years: ☐ Do items in A.
101,250 mi/162,000 km/ — ☐ Replace oil and filter.
105,000 mi/168,000 km/ 7 years:
☐ Clean air cleaner element with low pressure air.
☐ Inspect valve clearance (cold) (see page 6-13)Intake: 0.20−0.24 mm (0.008−0.009 in.) Exhaust: 0.28−0.32 mm (0.011−0.013 in.)
☐ Replace spark plugs. Use NGK (PZFR5F-11) or DENSO (PKJ16CR-L11). Gap: 1.0−1.1 mm (0.039−0.043 in) (see page 4-24).
☐ Replace timing belt (see page 6-19), and inspect the water pump (see page 10-9) only if the belts was not replaced at 60,000 miles.
☐ Check idle speed (see page 11-68): 680±50 rpm
☐ Do items in A and B.
108,750 mi/174,000 km/ — ☐ Replace oil and filter.
112,500 mi/180,000 km/ 7 1/2 years: ☐ Do items in A.
116,250 mi/186,000 km/ — ☐ Replace oil and filter.
120,000 mi/192,000 km/ 8 years: ☐ Do items A, B, and C.
120,000 mi/200,000 km/6 years
☐ Replace engine coolant (see page 10-10). Use Honda All Season Antifreeze/coolant Type 2.
Capacity: 5.6 ℓ (5.9 US qt, 4.9 Imp qt), thereafter every 60,000 miles (100,000 km) or 5 years.
☐ Replace timing belt (see page 6-19), and inspect the water pump (see page 10-9) only if the belts was not replaced at 60,000 miles.

Do the items in parts A, B, C, and D as required for mileage/time interval.

A

- ☐ Replace engine oil and filter (see page 8-5). — Capacity with filter change: 4.4 ℓ (4.6 US qt, 3.9 Imp qt)
- ☐ Inspect front and rear brakes, every 6 months if vehicle is driven less than 7,500 mile per year (see page 19-2).
  - Check pads and discs for wear (thickness), damage, and cracks.
  - Check calipers for damage, leaks, and tightness of mount bolts.
- ☐ Rotate tires, if the vehicle has been driven the distance listed. Follow the pattern shown in the Owner's Manual. (Check tire inflation and condition.)
- ☐ Inspect tie rod ends, steering gearbox, and boots (see page 17-12).
  - Check rack grease and steering linkage.
  - Check boots for damage and leaking grease.
  - Check fluid lines for damage and leaks.
- ☐ Inspect suspension components.
  - Check bolts for tightness.
  - Check condition of ball joint boots for deterioration and damage.
- ☐ Inspect driveshaft boots. Check boots for cracks and boot bands for tightness (see page 16-3)*[1].

B

- ☐ Check parking brake adjustment. — Should be fully applied within 6 to 9 clicks.
- ☐ Lubricate door locks and hinges with Honda white lithium grease.
- ☐ Inspect brake hoses and lines (including ABS). Check the master cylinder, proportioning control valve, and ABS modulator for damage and leakage (see page 19-30)*[1].
- ☐ Check fluid levels and condition of fluids; check for leaks. If necessary, add ATF (see page 14-112), engine coolant, brake fluid, and windshield washer fluid.
- ☐ Inspect cooling system hoses and connections.
  - Check for damage, leaks, and deterioration.
  - Check for proper fan operation.
- ☐ Inspect exhaust system.* Check catalytic converter heat shield, exhaust pipe, and muffler for damage, leaks, and tightness (see page 9-4).
- ☐ Inspect fuel lines and connections.* Check for loose connections, cracks and deterioration; retighten loose connections and replace damaged parts (see page 11-73).
- ☐ Check all lights. Check function of all interior and exterior lights, and the positions of the headlights (see page 22-98)*[1].
- ☐ Inspect the vehicle underbody. Check the paint for damage, scratches, stone chipping, and dents.

C

- ☐ Replace air cleaner element.
- ☐ Inspect and adjust drive belt. Look for cracks and damage, then check tension by pushing on each belt (about 22 lbs) midway between the pulleys:
  - P/S pump belt: 13.0 – 16.5 mm (0.51 – 0.65 in) (see page 17-10)
- ☐ Replace air conditioning filter, every 15,000 miles if vehicle is driven mostly where air has high concentration of soot from industry and diesel-powered vehicles; also replace it anytime airflow is less than usual (see page 21-26)*[1].
- ☐ Replace transmission fluid. Use Genuine Honda ATF.

D

- ☐ Replace brake fluid every 3 years (Independent of Distance). Use Genuine DOT 3. Fill to between marks on reservoir, (see page 11-000).

According to state and federal regulations, failure to do the maintenance items marked with asterisk (*) will not void customer's emissions warranties. However, Honda recommends that all maintenance services be done at the recommended interval to ensure long-term reliability.
*[1]: Refer to '98-01 ACCORD Service Manual (P/N 61S8008)

Maintenance Schedule for Normal and Severe Conditions (2001 Model)

Listed by Maintenance Item

Service at the indicated distance or time, whichever comes first.
- If driven in normal conditions, do items with a dot (●).
- If driven in severe conditions (see page 3-6) or normally driven in Canada, do items with a circle (○) and items with a dot (●).

Service at the indicated distance or time, whichever comes first.	miles x 1000	3.75	7.5	11.25	15	18.75	22.5	26.25	30	33.75	37.5
	km x 1000	6	12	18	24	30	36	42	48	54	60
	years	—	1/2	—	1	—	1 1/2	—	2	—	2 1/2
Replace engine oil		Normal Conditions: Every 7,500 miles (12,000 km) or 12 months Severe Conditions: Every 3,750 miles (6,000 km) or 6 months									
Replace engine oil filter		Normal Conditions: Every other oil change Severe Conditions: Every oil change									
Clean air cleaner element					○						
Replace air cleaner element									●		
Inspect valve clearance		Adjust only if noisy.									
Replace spark plugs											
Replace timing belt, NOTE 1 and inspect water pump											
Inspect and adjust drive belts									●		
Inspect idle speed*											
Replace engine coolant For engine coolant: Normal and Severe Conditions: Every 120,000 miles (192,000 km) or 10 years, thereafter every 60,000 miles (96,000 km) or 5 years.		Normal and Severe Conditions: Every 120,000 miles (192,000 km) or 10 years, thereafter every 60,000 miles (96,000 km) or 5 years									
Replace transmission fluid		Normal Condition: Every 120,000 miles (192,000 km) or 6 years, thereafter every 90,000 miles (144,000 km) or 5 years Severe Condition: Every 60,000 miles (96,000 km) or 3 years, thereafter every 30,000 miles (48,000 km) or 2 years									
Inspect front and rear brakes			○		●		○		●		○
Replace brake fluid		Every 3 years (independent of distance)									
Check parking brake adjustment					●				●		
Replace air conditioning filter NOTE 2									●		
Lubricate locks and hinges					○				○		
Rotate tires (Check tire inflation and condition at least once a month)			●		●		●		●		●
Inspect tie-rod ends, steering gearbox, and boots			○		●		○		●		○
Inspect suspension components			○		●		○		●		○
Inspect driveshaft boots			○		●		○		●		○
Inspect brake hoses and lines (including ABS)					●				●		
Inspect all fluid levels and condition of fluids					●				●		
Inspect cooling system hoses and connections					●				●		
Inspect exhaust system*					●				●		
Inspect fuel lines and connections*					●				●		
Check lights and controls					○				○		
Inspect vehicle under body					○				○		

NOTE:
1. If the vehicle is regularly driven in very hot or cold weather, over 110°F (43°C) or under −20°F (−29°C), replace this belt every 60,000 miles; If not, replace it at 105,000 miles.
2. Replace the air conditioning filter every 15,000 miles if the vehicle is driven mostly where air has a high concentration of soot from industry and diesel-powered vehicle; also replace it anytime airflow is less than usual.

* According to state and federal regulations, failure to do the maintenance items marked with an asterisk (*) will not void customer's emissions warranties. However, Honda recommends that all maintenance services be done at the recommended interval to ensure long-term reliability.

41.25	45	48.75	52.5	56.25	60	63.75	67.5	71.25	75	78.75	82.5	86.25	90	93.75	97.5	101.25	105	108.75	112.5	116.25	120
66	72	78	84	90	96	102	108	114	120	126	132	138	144	150	156	162	168	175	181	187	193
—	3	—	3 1/2	—	4	—	4 1/2	—	5	—	5 1/2	—	6	—	6 1/2		7	—	7 1/2	—	8
Normal Conditions: Every 7,500 miles (12,000 km) or 12 months Severe Conditions: Every 3,750 miles (6,000 km) or 6 months																					
Normal Conditions: Every other oil change Severe Conditions: Every oil change																					
	○								○								○				
					●								●								●
Adjust only if noisy.																					
																	●				
					○												●				○
					●								●								●
																	●				
Normal and Severe Conditions: Every 120,000 miles (192,000 km) or 10 years, thereafter every 60,000 miles (96,000 km) or 5 years																					●
Normal Conditions: Every 120,000 miles (192,000 km) or 6 years, thereafter every 90,000 miles (144,000 km) or 5 years Severe Conditions: Every 60,000 miles (96,000 km) or 3 years, thereafter every 30,000 miles (48,000 km) or 2 years																					
	●		○		●		○		●		○		●		○		●		○		●
Every 3 years (independent of distance)																					
	●				●				●				●				●				●
					●								●								●
	○				○				○				○				○				○
	●		●		●		●		●		●		●		●		●		●		●
	●		○		●		○		●		○		●		○		●		○		●
	●		○		●		○		●		○		●		○		●		○		●
	●		○		●		○		●		○		●		○		●		○		●
	●				●				●				●				●				●
	●				●				●				●				●				●
	●				●				●				●				●				●
	●				●				●				●				●				●
	●				●				●				●				●				●
	○				○				○				○				○				○
	○				○				○				○				○				○

Engine Electrical

Special Tools

Ref. No.	Tool Number	Description	Qty
①	A973X-041-XXXXX	Vacuum Pump/Gauge, 0 – 30 in.Hg	1
②	07746-0010400	Driver Attachment, 52 x 55 mm	1
③	07749-0010000	Driver	1

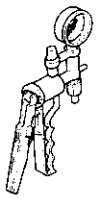

①

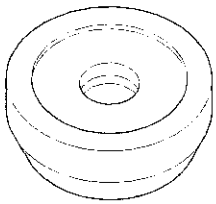

②

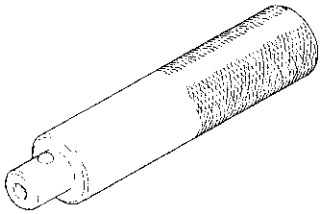

③

Starting System

Component Location Index

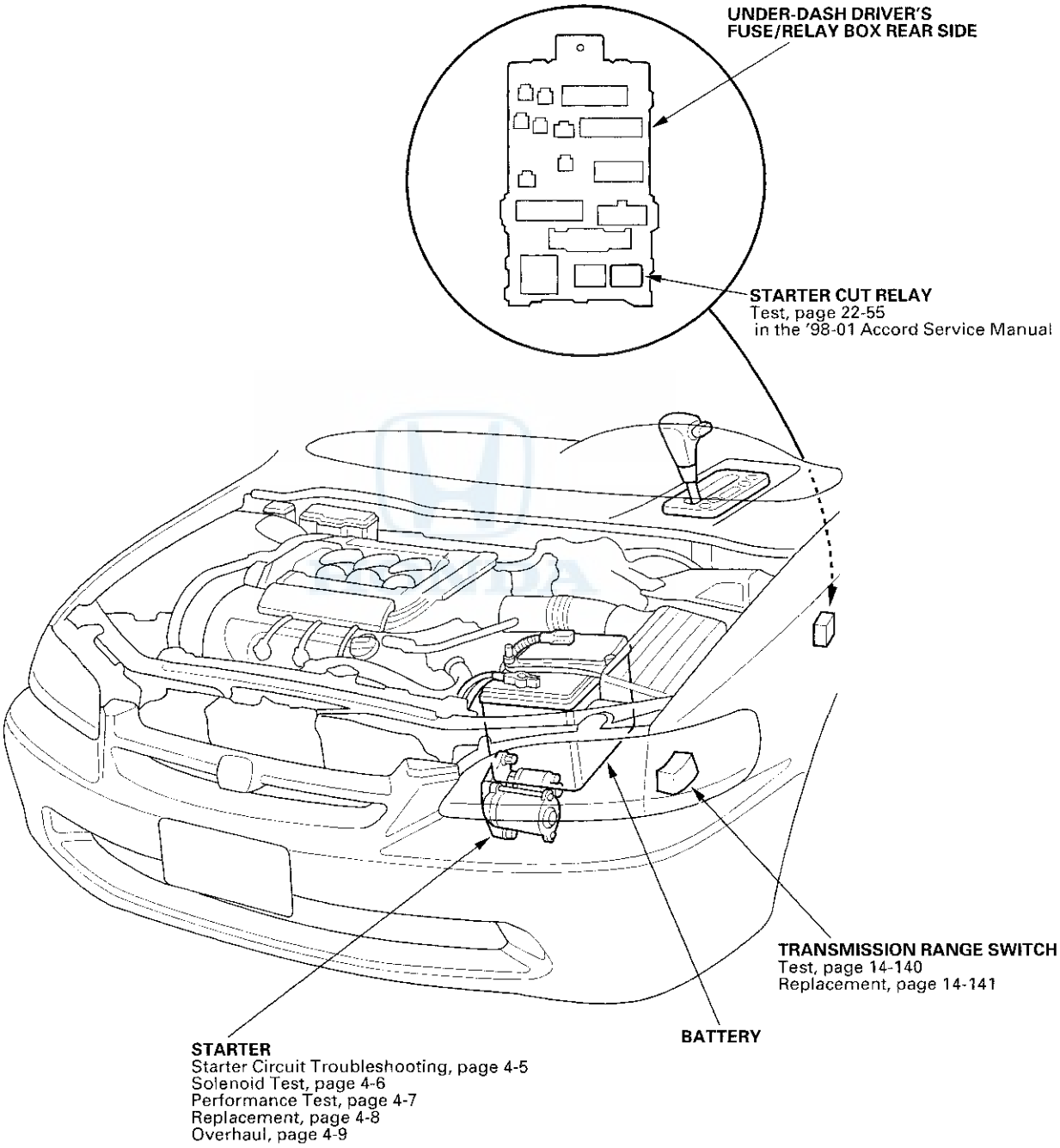

Starting System

Circuit Diagram

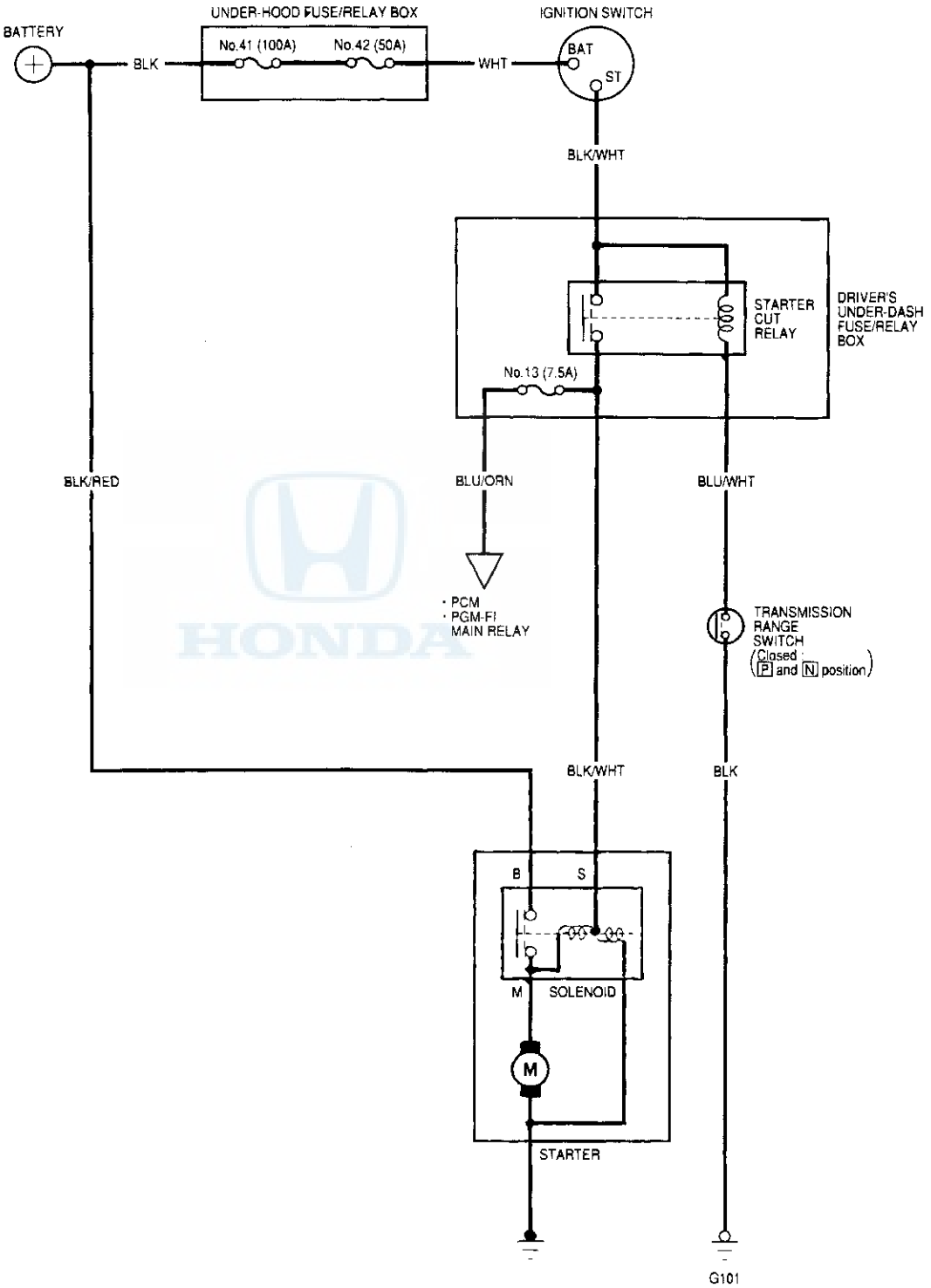

Starter Circuit Troubleshooting

NOTE:
- Air temperature must be between 59° and 100°F (15° and 38°C) during this procedure.
- After this test, or any subsequent repair, reset the PCM to clear any Diagnostic Trouble Code (DTC); refer to the '98-01 Accord Service Manual (see page 11-3).

Recommended Procedure:
- Use a starter system tester.
- Connect and operate the equipment in accordance with the manufacturer's instructions.

Alternate Procedure

1. Hook up the following equipment:

   - Ammeter, 0 – 400 A
   - Voltmeter, 0 – 20 V (accurate within 0.1 volt)
   - Tachometer, 0 – 1200 rpm

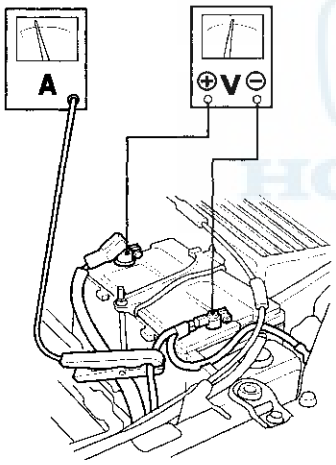

2. Remove the No. 46 (15 A) fuse from the under-dash fuse/relay box.

3. With the shift lever in N or P, turn the ignition switch to start (III).

   Did the starter crank the engine normally?

   YES – The starting system is OK. ■

   NO – If the starter won't crank at all, go to step 4. If it cranks the engine erratically or too slowly, go to step 7. If it won't disengage from the torque converter ring gear when you release the key, check for the following until you find the cause.

   - Solenoid plunger and switch malfunction
   - Dirty drive gear or damaged overrunning clutch.

4. Check the battery condition. Check electrical connections at the battery and the starter for looseness and corrosion. Then check the starter again.

   Did the starter crank the engine?

   YES – The starting system is OK. ■

   NO – Go to step 5.

5. Make sure the transmission is in neutral, then disconnect the BLK/WHT wire (A) from the starter solenoid (B). Connect a jumper wire from the battery positive terminal to the solenoid terminal.

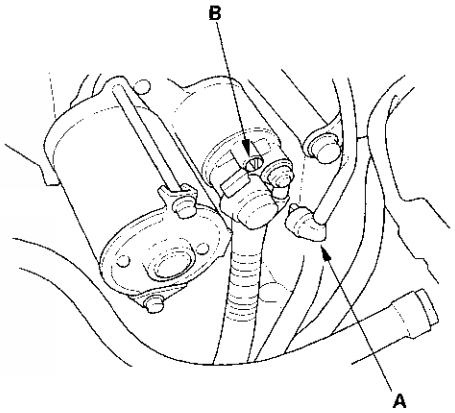

   Did the starter crank the engine?

   YES – Go to step 6.

   NO – Remove the starter and diagnose its internal problems. ■

6. Check the following items in the order listed until you find the open circuit.

   - Check the BLK/WHT wire and connectors between the starter cut relay and the ignition switch, and between the starter cut relay and the starter.
   - Check the ignition switch, refer to the '98-01 Accord Service Manual (see page 22-55).
   - Check the transmission range switch and connector (see page 14-141).

(cont'd)

Starter Circuit Troubleshooting (cont'd)

7. Check engine speed during cranking.

   Is engine speed above 100 rpm?

   YES – Go to step 8.

   NO – Remove and disassemble the starter, and check for the following until you find the cause. ■

   - Excessively worn starter brushes
   - Open circuit in commutator brushes
   - Dirty or damaged helical spline or drive gear
   - Faulty drive gear clutch

8. Check the cranking voltage and current draw.

   Is cranking voltage no less than 8.5 volts, and current draw no more than 380 amps?

   YES – Go to step 9.

   NO – Remove and disassemble the starter, and check for the following until you find the cause. ■

   - Open circuit in starter armature commutator segments
   - Starter armature dragging
   - Shorted armature winding
   - Excessive drag in engine

9. Remove the starter and inspect its drive gear and the torque converter ring gear for damage. Replace any damaged parts.

Starter Solenoid Test

1. Check the hold-in coil for continuity between the S terminal (A) and the armature housing (ground). There should be continuity.

   - If there is continuity, go to step 2.
   - If there is no continuity, replace the solenoid.

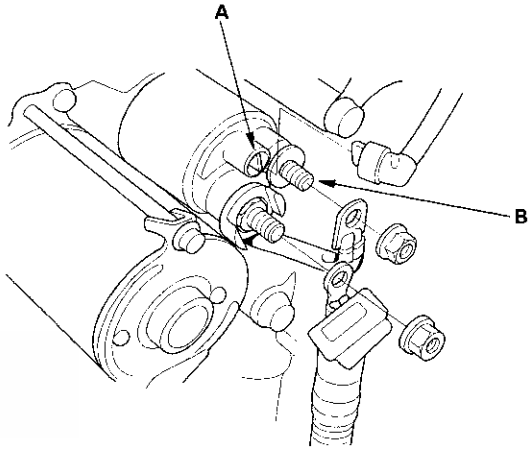

2. Check the pull-in coil for continuity between the S and M terminals (B). There should be continuity.

   - If there is continuity, the solenoid is OK.
   - If there is no continuity, replace the solenoid.

Starter Performance Test

1. Disconnect the wires from the S terminal (A) and the M terminal (B).

2. Make a connection as described below using as heavy a wire as possible (preferably equivalent to the wire used for the vehicle).

3. Connect the battery as shown. If the starter pinion pops out, it is working properly. To avoid damaging the starter, do not leave the battery connected for more than 10 seconds.

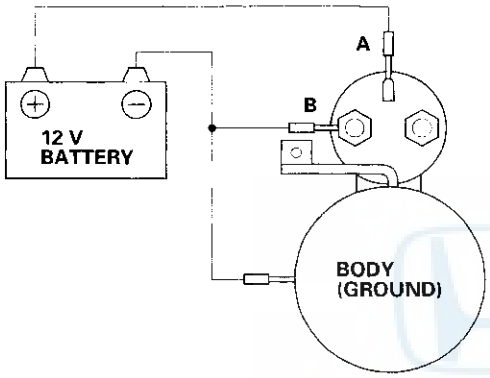

4. Disconnect the battery from the M terminal. If the pinion does not retract, the hold-in coil is working properly. To avoid damaging the starter, do not leave the battery connected for more than 10 seconds.

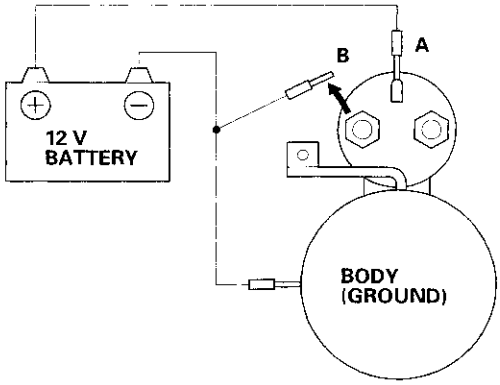

5. Disconnect the battery also from the body. If the pinion retracts immediately, it is working properly. To avoid damaging the starter, do not leave the battery connected for more than 10 seconds.

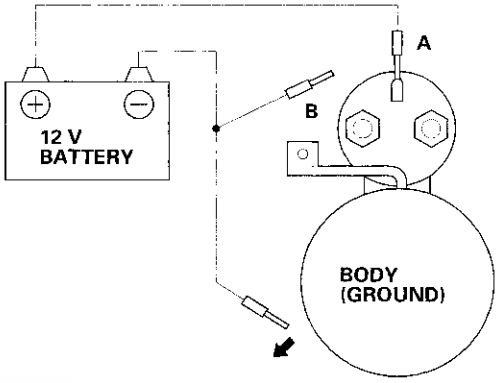

6. Clamp the starter firmly in a vise.

7. Connect the starter to the battery as described in the diagram below, and confirm that the motor starts and keeps rotating.

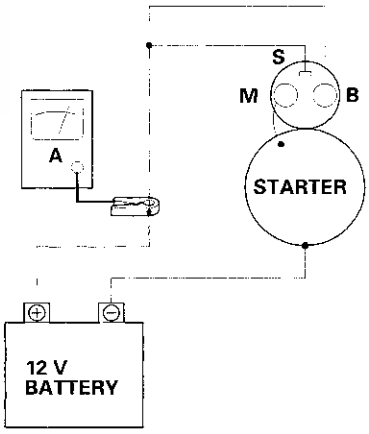

8. If the electric current and motor speed meet the specifications when the battery voltage is at 11.5 V, the starter is working properly.

Specifications:

1.6 kw	**80 A or less (Electric current), 2,600 rpm or more (Motor-speed)**

Starter Replacement

1. Make sure you have the anti-theft code for the radio, then write down the frequencies for the radio's preset buttons.

2. Disconnect the battery negative cable, then disconnect the positive cable, and wait at least 3 minutes.

3. Remove the ATF cooler hose from the clamp on the starter motor.

4. Disconnect the starter cable (A) from the B terminal on the solenoid, then disconnect the BLK/WHT wire (B) from the S terminal.

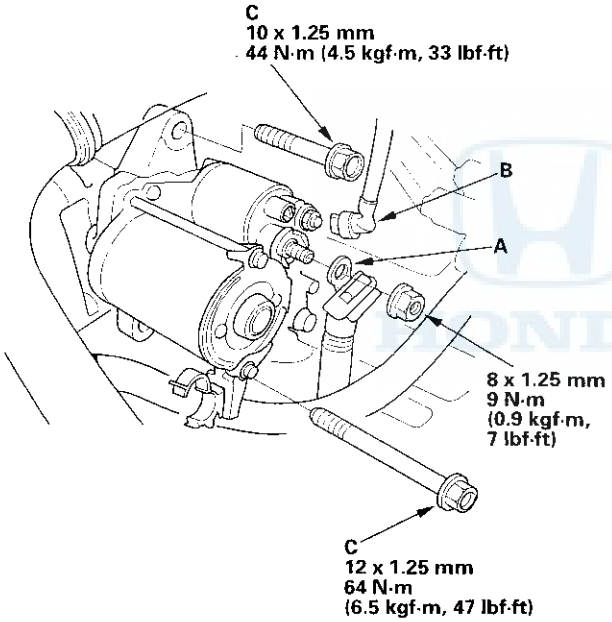

5. Remove the 2 bolts (C) holding the starter, then remove the starter.

6. Install in the reverse order of removal. Make sure the crimped side of the ring terminal (A) is facing out.

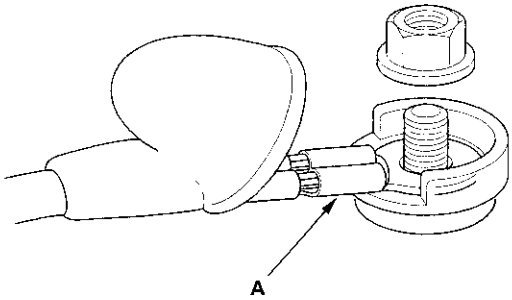

7. Connect the battery positive cable and negative cable to the battery.

8. Enter the anti-theft code for the radio, then enter the customer's radio station presets.

Starter Overhaul

Disassembly/Reassembly

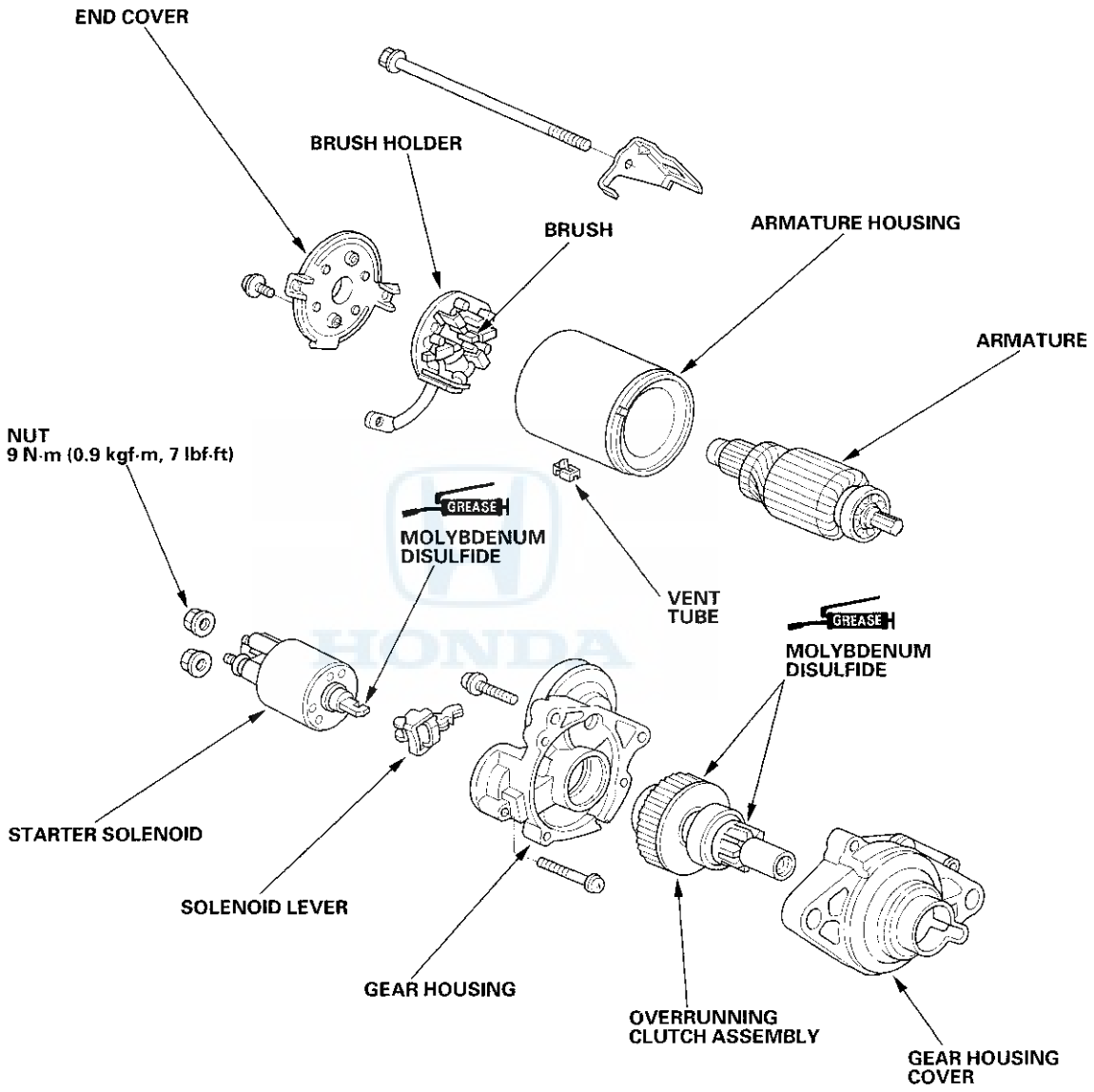

(cont'd)

Starter Overhaul (cont'd)

1. Remove the starter (see page 4-8).

2. Disassemble the starter as shown at the beginning of this procedure.

Armature Inspection and Test

3. Inspect the armature for wear or damage due to contact with the permanent magnet. If there is wear or damage, replace the armature.

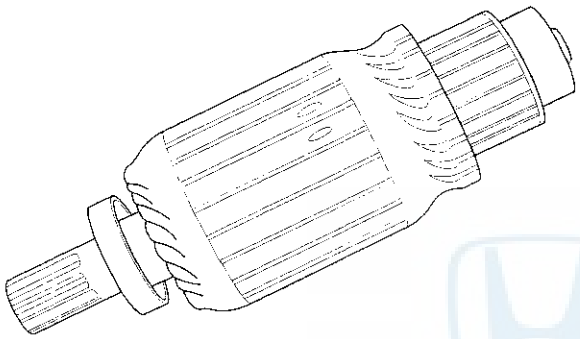

4. Check commutator (A) surface. If the surface is dirty or burnt, resurface with emery cloth or a lathe within the following specifications, or recondition with # 500 or # 600 sandpaper (B).

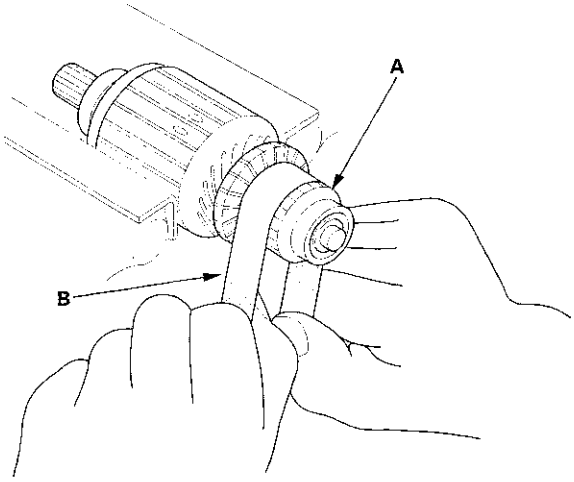

5. Check the commutator diameter. If the diameter is below the service limit, replace the armature.

Commutator Diameter
Standard (New): 28.0 – 28.1 mm (1.102 – 1.106 in.)
Service Limit: 27.5 mm (1.083 in.)

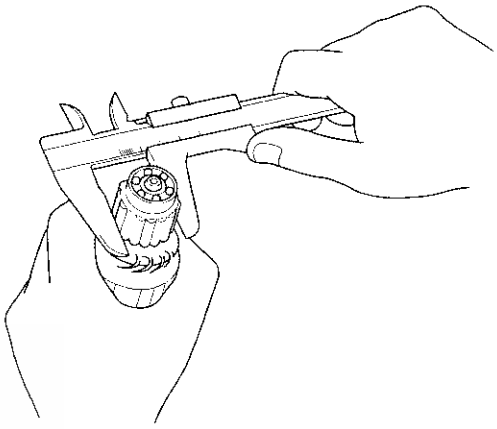

6. Measure the commutator runout.

- If the commutator runout is within the service limit, check the commutator for carbon dust or brass chips between the segments.
- If the commutator runout is not within the service limit, replace the armature.

Commutator Runout
Standard (New): 0.02 mm (0.001 in.) max.
Service Limit: 0.05 mm (0.002 in.)

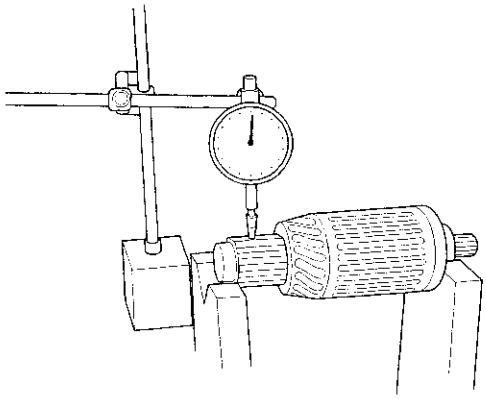

7. Check the mica depth (A). If the mica is too high (B), undercut the mica with a hacksaw blade to the proper depth. Cut away all the mica (C) between the commutator segments. The undercut should not be too shallow, too narrow, or V-shaped (D).

Commutator Mica Depth
Standard (New): 0.4—0.5 mm (0.016—0.020 in.)
Service Limit: 0.15 mm (0.006 in.)

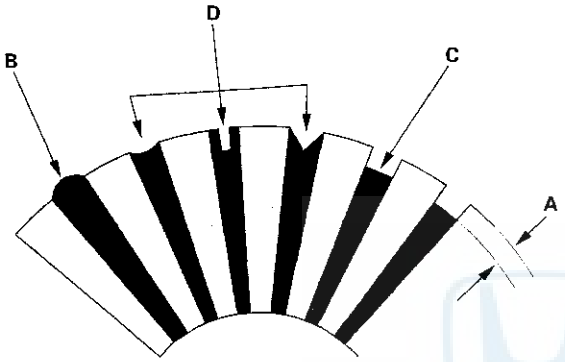

8. Check for continuity between the segments of the commutator. If an open circuit exists between any segments, replace the armature.

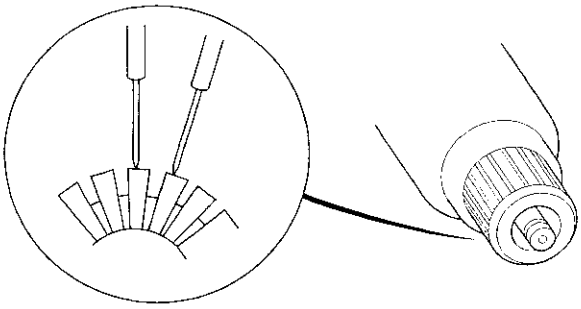

9. Place the armature (A) on an armature tester (B). Hold a hacksaw blade (C) on the armature core. If the blade is attracted to the core or vibrates while the core is turned, the armature is shorted. Replace the armature.

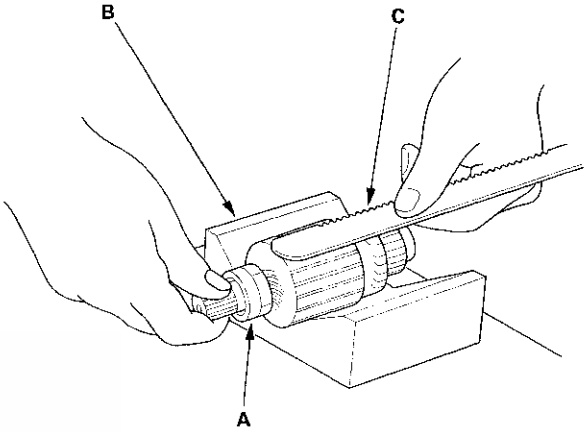

10. Check with an ohmmeter that no continuity exists between the commutator (A) and armature coil core (B), and between the commutator and armature shaft (C). If continuity exists, replace the armature.

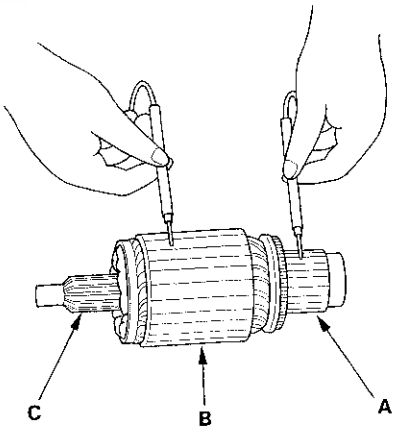

(cont'd)

Starter Overhaul (cont'd)

Starter Brush Inspection

11. Measure the brush length. If it is not within the service limit, replace the brush holder assembly.

Brush Length
Standard (New): 15.8 – 16.2 mm (0.62 – 0.64 in.)
Service Limit: 11.0 mm (0.43 in.)

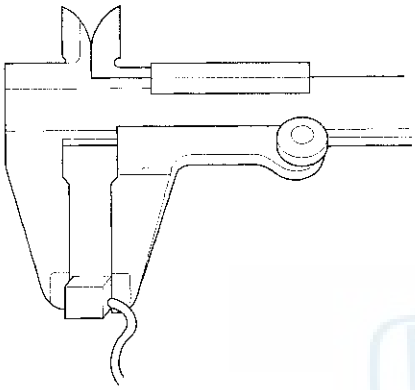

Starter Brush Holder Test

12. Check that there is no continuity between the (+) brush holder (A) and (–) brush holder (B). If there is continuity, replace the brush holder assembly.

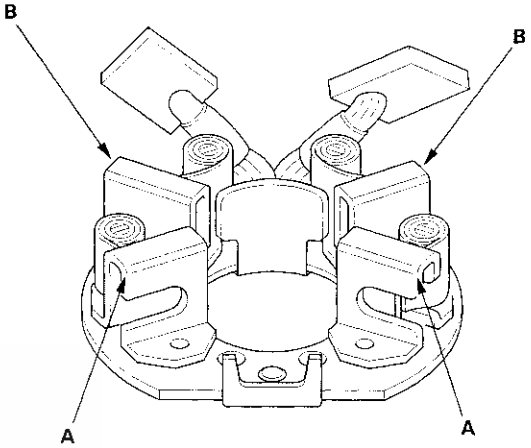

13. Insert the brush (A) into the brush holder, and bring the brush into contact with the commutator, then attach a spring scale (B) to the spring (C). Measure the spring tension at the moment the spring lifts off the brush.

Spring Tension:
15.7 – 17.7 N (1.6 – 1.8 kgf, 3.53 – 3.97 lbf)

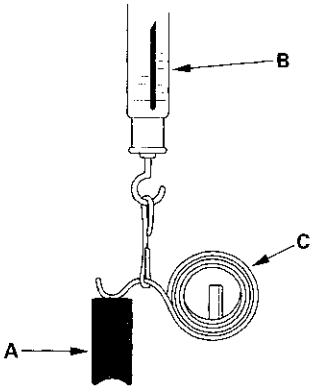

14. Pry back each brush spring with a screwdriver, then position the brush about halfway out of its holder, and release the spring to hold it there.

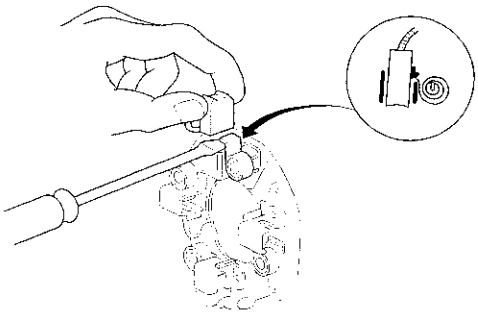

15. Install the armature in the housing. Next, pry back each brush spring again, and push the brush down until it seats against the commutator, then release the spring against the end of the brush.

    NOTE: To seat new brushes, slip a strip of # 500 or # 600 sandpaper, with the grit side up, between the commutator and each brush, and smoothly rotate the armature. The contact surface of the brushes will be sanded to the same contour as the commutator.

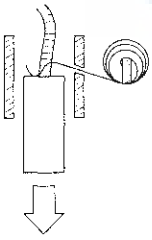

16. Install the starter end cover (A) to retain the brush holder (B).

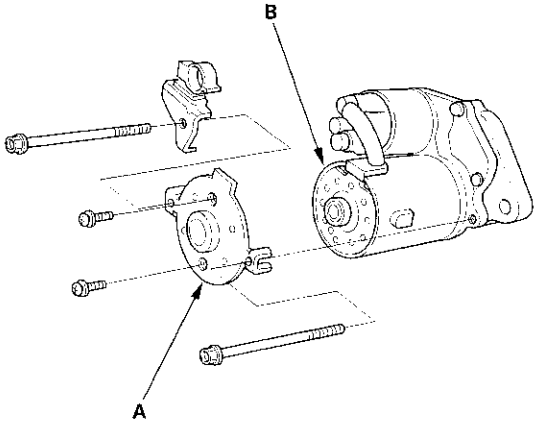

Overrunning Clutch Inspection

17. Slide the overrunning clutch along the shaft. Replace it if it does not slide smoothly.

18. Rotate the overrunning clutch (A) both ways. If it does not lock in either direction or it locks in both directions, replace it.

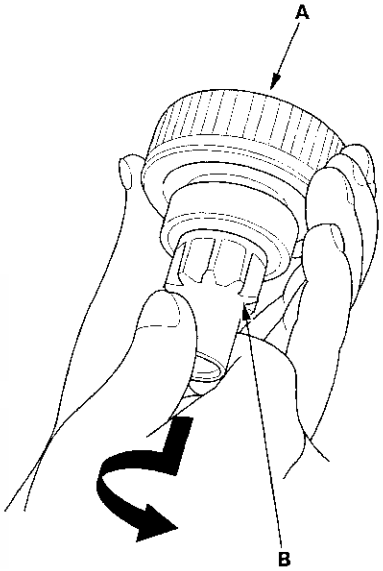

19. If the starter drive gear (B) is worn or damaged, replace the overrunning clutch assembly; the gear is not available separately.

    Check the condition of the torque converter ring gear if the starter drive gear teeth are damaged.

20. Reassemble the starter in reverse order of disassembly.

Component Location Index

'98-99 models:

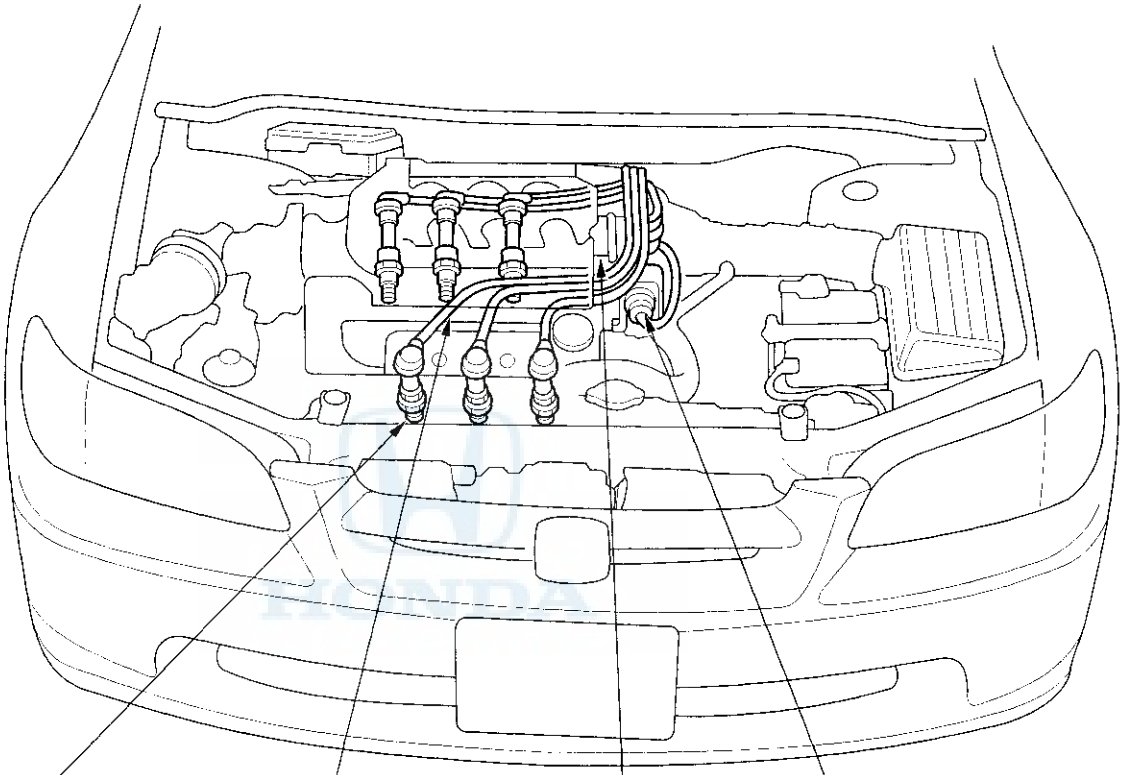

SPARK PLUG
Inspection, page 4-24

IGNITION WIRES
Inspection and Test, page 4-22

IGNITION COIL
Test, page 4-22

DISTRIBUTOR
Replacement, page 4-19
Overhaul, page 4-20
Ignition Control Module (ICM) Input Test, page 4-21
Ignition Timing Inspection, page 4-18

'00-01 models:

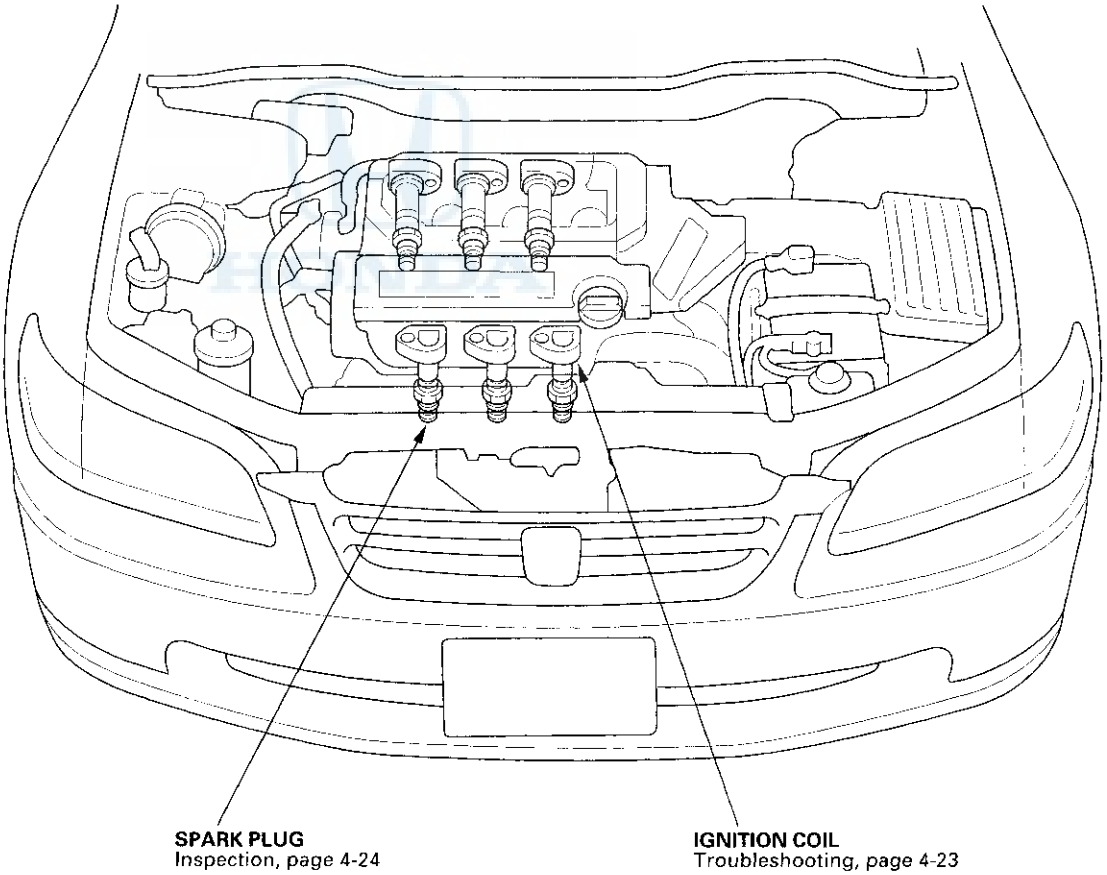
SPARK PLUG
Inspection, page 4-24
IGNITION COIL
Troubleshooting, page 4-23

Circuit Diagram

'98-99 models:

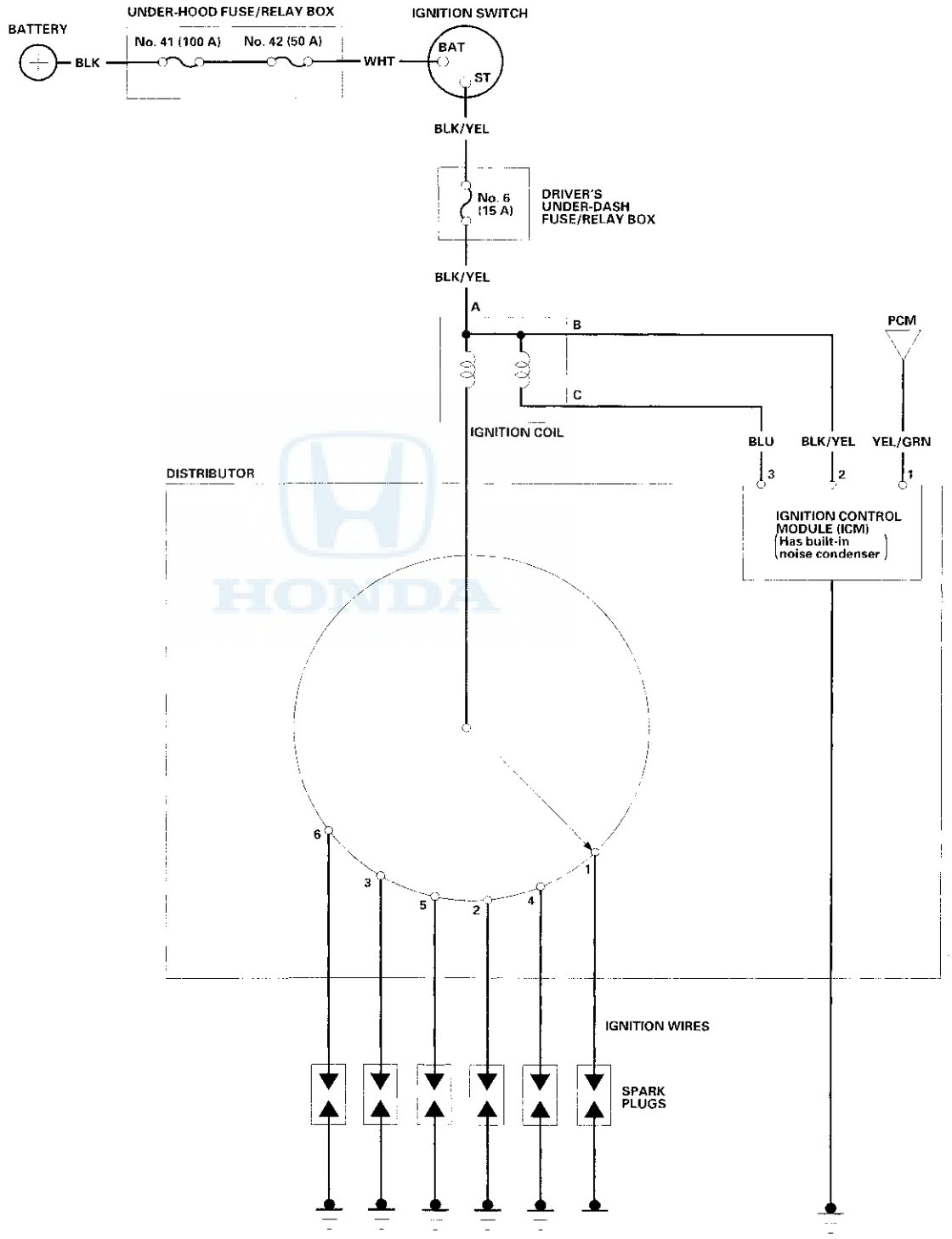

'00-01 models:

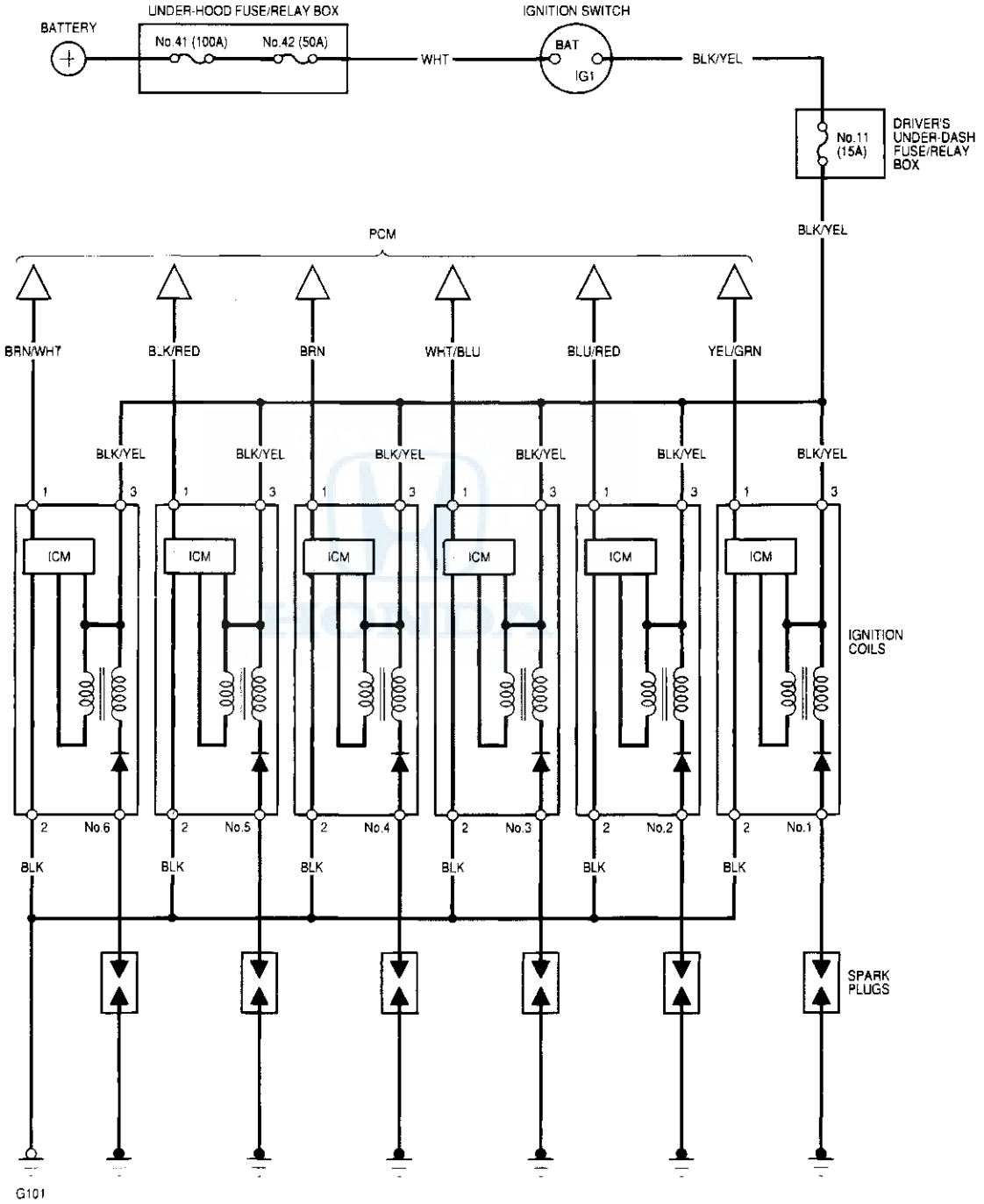

ICM : Ignition Control Module

Ignition Timing Inspection

1. Check the idle speed, and adjust it if necessary (see page 11-86).

2. Connect the Honda PGM tester to the Data Link Connector (DLC), and follow the tester's prompts in the "SCS" menu (see the Honda PGM Tester Operator's Manual).

3. Start the engine. Hold the engine at 3,000 rpm with no load, shift lever in N or P, until the radiator fan comes on, then let it idle.

4. Connect the timing light to the No. 1 ignition wire (ignition coil wire for '00-01 models).

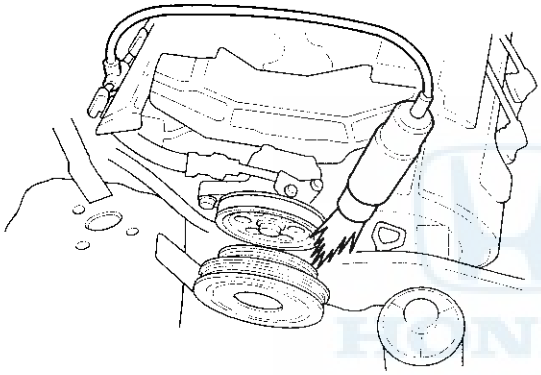

5. Point the light toward the pointer (A) on the timing belt cover. Check the ignition timing under a no load conditions: headlights, blower fan, rear window defogger, and air conditioner are not operating. If the ignition timing differs from the specification below, replace the PCM; refer to the '98-01 Accord Service Manual (see page 11-3).

   Ignition Timing:
   10° ± 2° BTDC (RED mark (B)) during idling in N or P

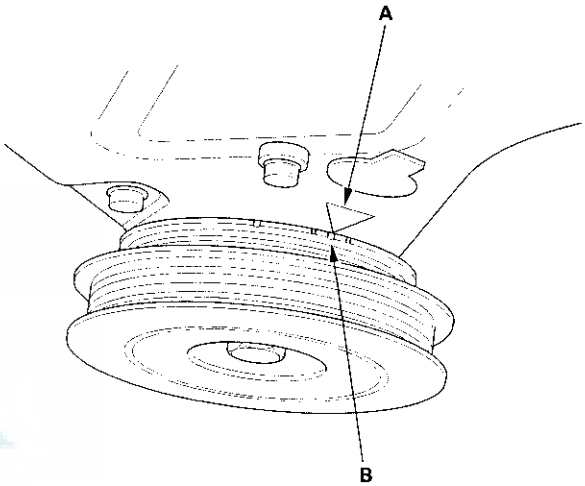

6. Disconnect the Honda PGM tester.

Distributor Replacement - '98-99 models

Removal

1. Disconnect the connector(A) from the distributor.

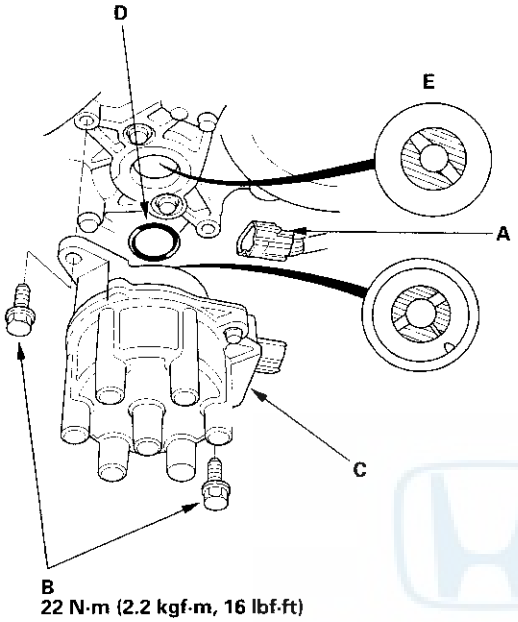

2. Disconnect the ignition wires from the distributor cap.

3. Remove the distributor mounting bolts (B) then remove the distributor (C) from the cylinder head.

Installation

1. Bring the No. 1 piston to compression stroke TDC.

2. Coat a new O-ring (D) with engine oil, then install it.

3. Slip the distributor into position.

   NOTE: The lug on the end of the distributor and its mating grooves in the camshaft end (E) are both offset to eliminate the possibility of installing the distributor 180° out of time.

4. Tighten the mounting bolts (B).

5. Connect the ignition wires to the distributor cap as shown.

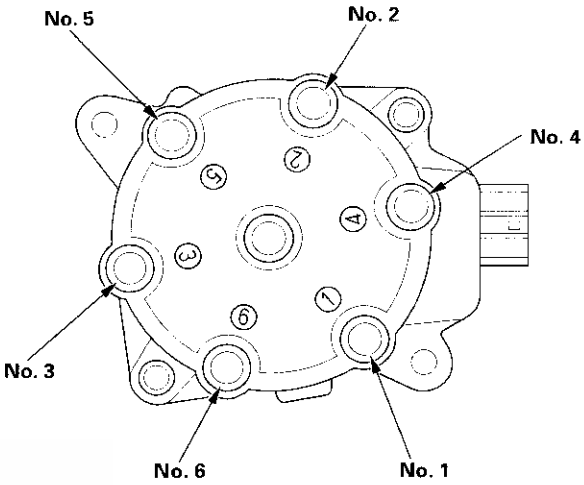

6. Connect the 3P connector to the distributor.

Distributor Disassembly/Reassembly - '98-99 models

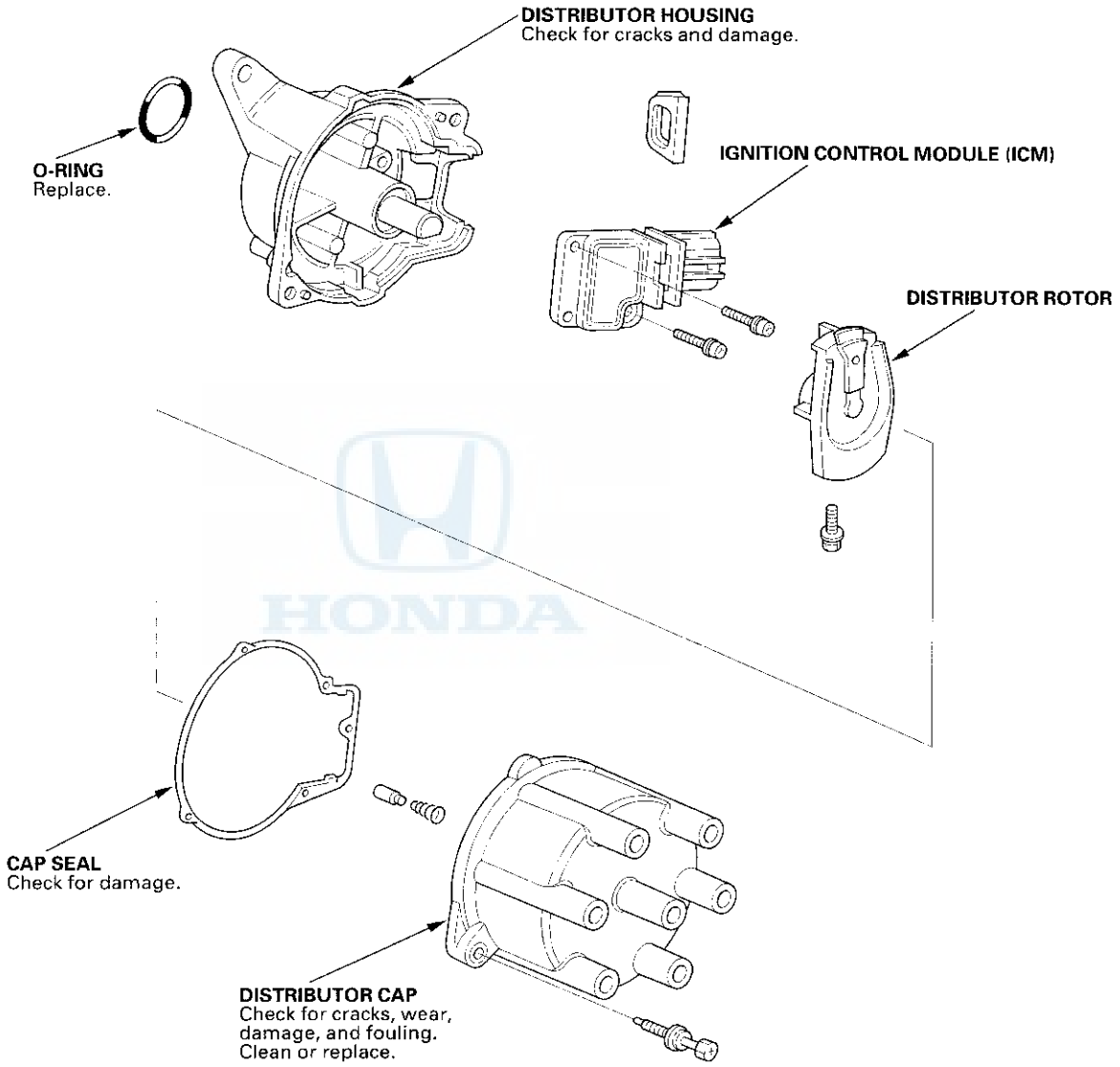

ICM (Ignition Control Module) Input Test - '98-99 models

NOTE:
- If the malfunction indicator lamp (MIL) comes on, refer to the DTC Troubleshooting Index; refer to the '98-01 Accord Service Manual.
- Perform an input test for the ignition control module (ICM) after finishing the fundamental tests for the ignition system and the fuel and emissions systems.

1. Disconnect the 3P connector from the distributor.

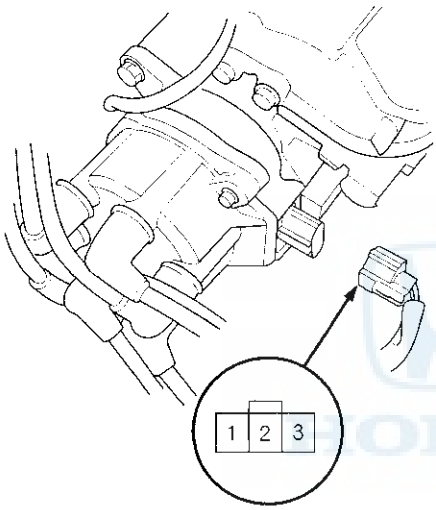

Wire side of female terminals

2. Turn the ignition switch ON (II). Check for voltage between the No. 2 terminal and body ground. There should be battery voltage.
   - If there is no battery voltage, check:
     - ignition coil.
     - BLK/YEL wire between the ICM and ignition coil.
   - If there is battery voltage, go to step 3.
3. Turn the ignition switch ON (II). Check for voltage between the No. 3 terminal and body ground. There should be battery voltage.
   - If there is no battery voltage, check:
     - ignition coil.
     - BLU wire between the ICM and ignition coil.
   - If there is battery voltage, go to step 4.
4. Disconnect PCM connector B (25P) and check for continuity on the No. 1 terminal between the ICM connector terminal No. 1 (YEL/GRN) and PCM connector terminal B13. There should be continuity.
5. Check for continuity on the No. 1 terminal to body ground. There should be no continuity. If there is continuity (short to ground), the ICM is probably damaged.
6. Reconnect PCM connector B (25P) and the distributor 3P connector.
7. If all the tests are normal, replace the ICM.

Ignition Coil Test - '98-99 models

1. Turn the ignition switch OFF.

2. Disconnect the 3P connector and the ignition coil wire.

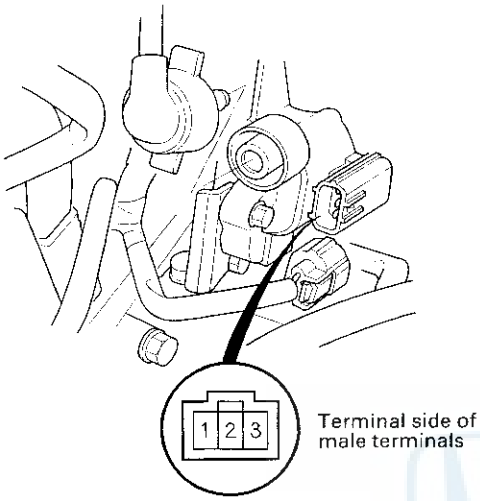

3. Using an ohmmeter, measure resistance between the terminals. Replace the coil if the resistance is not within specifications.

   NOTE: Resistance will vary with the coil temperature; specifications are at 68°F (20°C).

   Primary Winding Resistance (Between the terminals 1 and 3): 0.34–0.42 Ω

   Secondary Winding Resistance (Between terminal 2 and secondary winding terminal): 17.1–20.3 kΩ

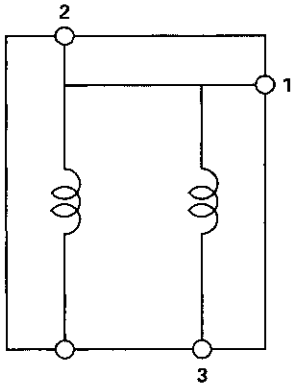

Ignition Wire Inspection and Test - '98-99 models

1. Carefully remove the ignition wires by pulling on the rubber boots. Do not bend the wires; you might break them inside.

2. Check the condition of the ignition wire terminals. If any terminal is corroded, clean it, and if it is broken or distorted, replace the ignition wire.

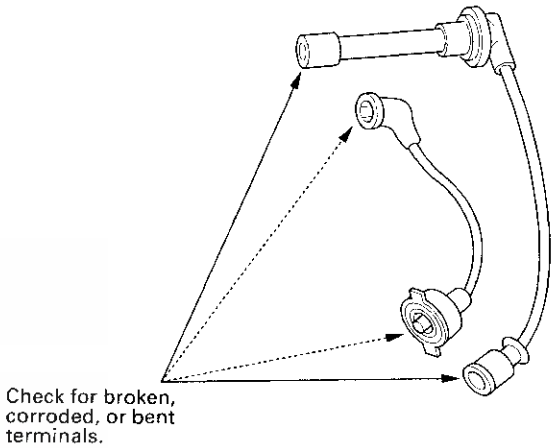

3. Connect ohmmeter probes and measure resistance.

   Ignition Wire Resistance: 25 kΩ max. at 68°F (20°C)

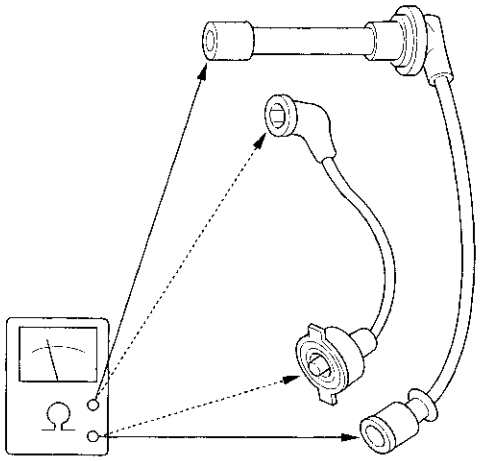

4. If resistance exceeds 25 kΩ, replace the ignition wire.

Ignition Coil Troubleshooting - '00-01 models

NOTE: Perform an ignition coil test after finishing the fundamental tests for the ignition system and the fuel and emissions system.

1. Remove the ignition coil cover.

2. Disconnect the 6 ignition coil 3P connectors.

3. Measure the voltage at the No. 3 terminal of each ignition coil 3P connector with the ignition switch ON (II).

IGNITION COIL 3P CONNECTOR

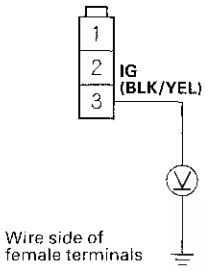

Is there battery voltage?

YES – Go to step 4.

NO – Repair open in the wire between ignition coil and No. 11 (15A) fuse in the driver's under-dash fuse/relay box. ■

4. Turn the ignition switch OFF.

5. Check for continuity between the No. 2 terminal of each ignition coil 3P connector and body ground.

IGNITION COIL 3P CONNECTOR

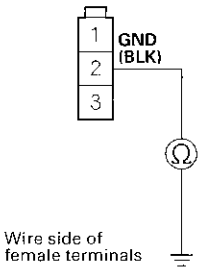

Is there continuity?

YES – Go to step 6.

NO – Repair open in the wire between ignition coil and body ground (G101). ■

6. Disconnect PCM connector C (31P).

7. Check for continuity between the body ground and PCM connector terminals C3, C4, C12, C13, C14, and/or C23 individually.

PCM CONNECTOR C (31P)

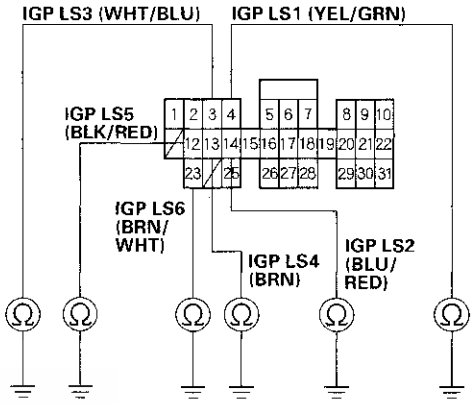

Is there continuity?

YES – Repair short in the wire between ignition coil and PCM. ■

NO – Go to step 8.

8. Connect PCM connector C (31P).

9. Measure the voltage at the No. 1 terminal of each ignition coil 3P connector with the ignition switch to start (III).

IGNITION COIL 3P CONNECTOR

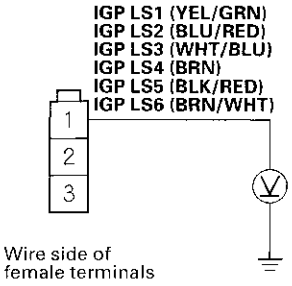

Is there approx. 0.5 V?

YES – Replace the ignition coil. ■

NO – Repair open in the wire between ignition coil and PCM. ■

Spark Plug Inspection

1. Inspect the electrodes and ceramic insulator.

   Burned or worn electrodes may be caused by:
   - Advanced ignition timing
   - Loose spark plug
   - Plug heat range too hot
   - Insufficient cooling

   Fouled plug may be caused by:
   - Retarded ignition timing
   - Oil in combustion chamber
   - Incorrect spark plug gap
   - Plug heat range too cold
   - Excessive idling/low speed running
   - Clogged air cleaner element
   - Deteriorated ignition coil

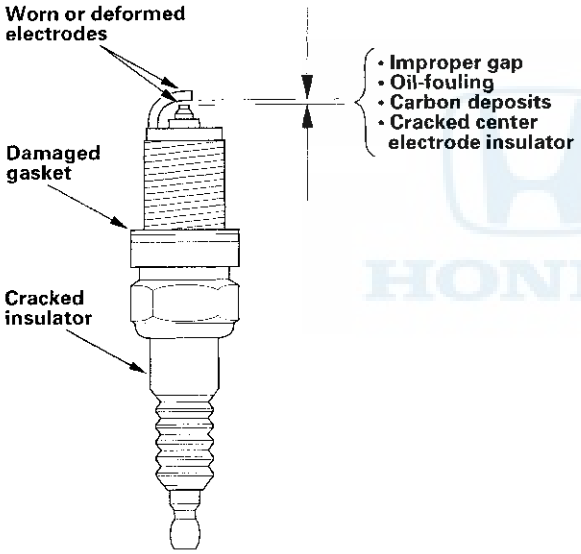

2. Do not adjust the gap of platinum tip plugs (A); replace the spark plug if the gap is out of specification.

   Electrode Gap:
   Standard (New): 1.0 – 1.1 mm (0.039 – 0.043 in.)
   Service Limit: 1.3 mm (0.05 in.)

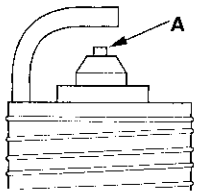

3. Replace the plug at the specified interval, or if the center electrode is rounded (A). Use only the spark plugs listed below.

   Spark Plugs:
   NGK: PZFR5F-11
   DENSO: PKJ16CR-L11

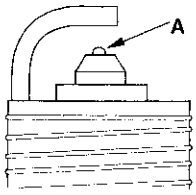

4. Apply a small quantity of anti-seize compound to the plug threads, and screw the plugs into the cylinder head finger-tight. Torque them to 18 N·m (1.8 kgf·m, 13 lbf·ft).

Charging System

Component Location Index

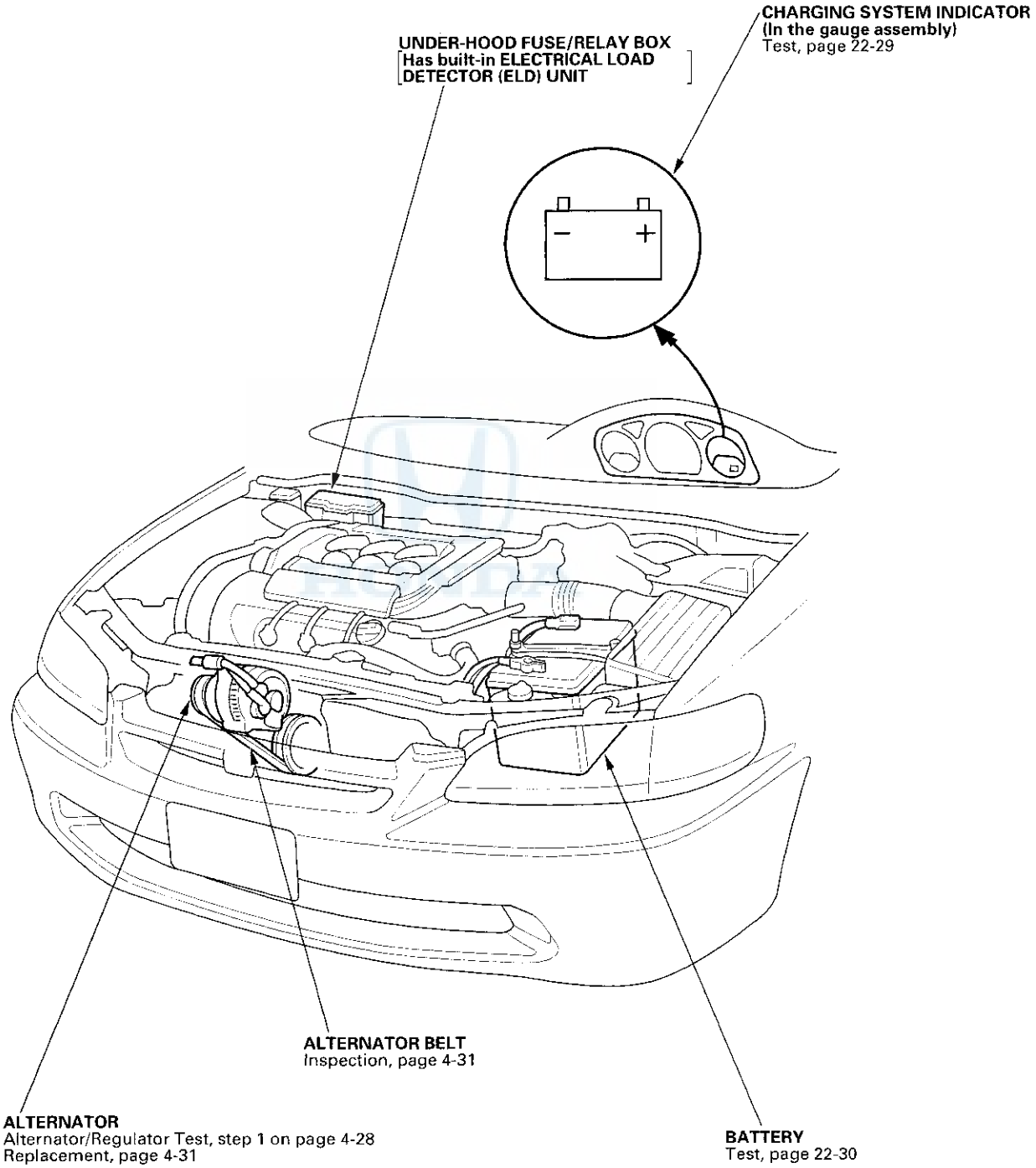

Circuit Diagram

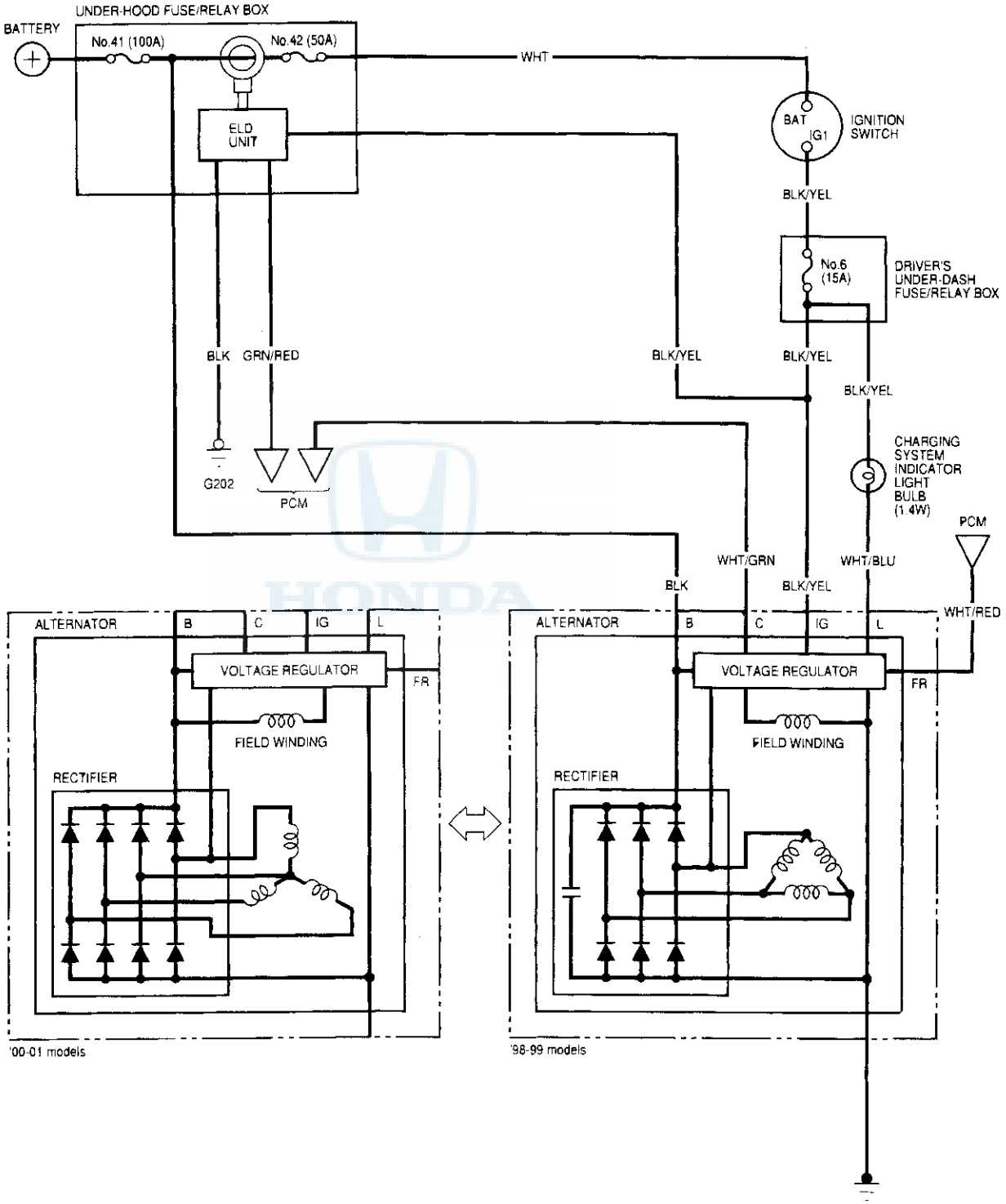

Charging Circuit Troubleshooting

If the charging system indicator does not come on or does not go off, or the battery is dead or low, test the following items in the order listed below:
Battery (see page 22-30)
Charging system indicator
Alternator/regulator circuit
Alternator control system

Charging System Indicator Test

1. Check the B terminal, that the 4P connector and under-hood fuse/relay box terminals are securely tightened.

   Are they securely tightened?

   YES – Go to step 2.

   NO – Tighten or reconnect. ■

2. Turn the ignition switch ON (II).

   Does the charging system indicator come on?

   YES – Go to step 3.

   NO – Go to step 7.

3. Start the engine.

   Does the charging system indicator go off?

   YES – Charging system indicator circuit is OK. ■

   NO – Go to step 4.

4. Turn the ignition switch OFF.

5. Disconnect the 4P connector from the alternator.

6. Turn the ignition switch ON (II).

   Does the charging system indicator come on?

   YES – Turn the ignition switch OFF, and repair the short in the WHT/BLU wire. ■

   NO – Go to step 10.

7. Turn the ignition switch OFF.

8. Disconnect the 4P connector from the alternator.

9. Ground the No. 3 terminal of the 4P connector. Turn the ignition switch ON (II).

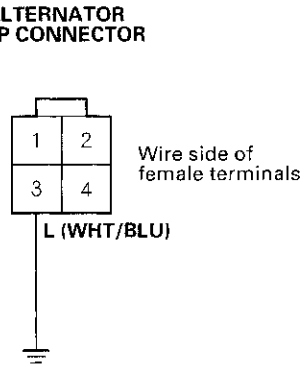

   Does the charging system indicator come on?

   YES – Go to step 10.

   NO – Turn the ignition switch OFF. Check for a blown No. 6 (15 A) fuse and a blown charging system light bulb. If the fuse and bulb are OK, repair the open in the WHT/BLU wire. ■

10. Measure the voltage at the No. 1 terminal of the alternator 4P connector with the ignition switch ON (II).

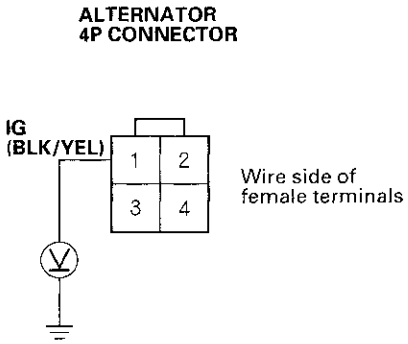

   Is there battery voltage?

   YES – Replace the alternator. ■

   NO – Repair open in the BLK/YEL wire between the alternator and the under-dash driver's fuse relay box. ■

(cont'd)

Charging Circuit Troubleshooting (cont'd)

Alternator and Regulator Circuit Test — '98-99 models

1. Be sure the battery is sufficiently charged (see page 22-30).

2. Connect a VAT-40 (or equivalent tester), and turn the selector switch to position 1 (starting).

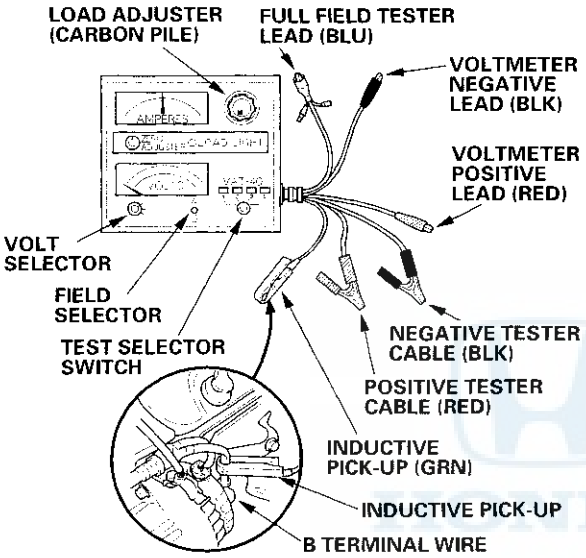

3. Shift to park or neutral, and start the engine. Hold the engine at 3,000 rpm, with no load until the radiator fan comes on, then let it idle.

4. Raise the engine speed to 2,000 rpm, and hold it there.

   Is there voltage over 16.0 V?

   YES — Replace the alternator. ■

   NO — Go to step 5.

5. Release the accelerator pedal, and let the engine idle.

6. Make sure all accessories are turned off. Turn the selector switch to position 2 (charging).

7. Remove the inductive pick-up, and zero the ammeter.

8. Place the inductive pick-up over the B terminal wire of the alternator so that the arrow points away from the alternator.

9. Raise the engine speed to 2,000 rpm, and hold it there.

   Is there voltage less than 12.0 V?

   YES — Replace the alternator. ■

   NO — Go to step 10.

10. Apply a load with the VAT-40 until the battery voltage drops to between 12-13.5 V.

    Is the amperage 75 A or more?

    YES — The charging system is OK. ■

    NO — Replace the alternator. ■

Alternator and Regulator Circuit Test—'00-01 models

1. Be sure the battery is sufficiently charged (see page 22-30).

2. Connect a VAT-40 (or equivalent tester), and turn the selector switch to position 1 (starting).

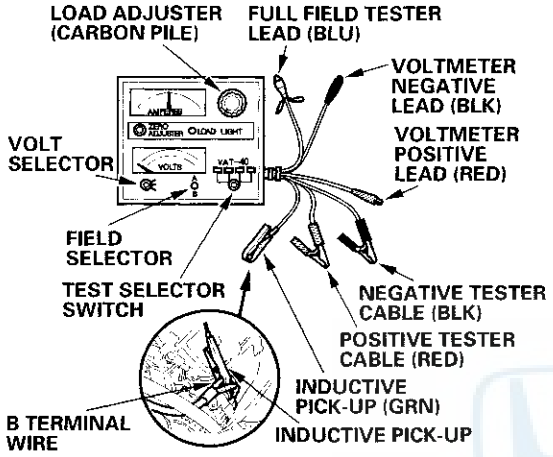

3. Shift to park or neutral, and start the engine. Hold the engine at 3,000 rpm, with no load until the radiator fan comes on, then let it idle.

4. Raise the engine speed to 2,000 rpm, and hold it there.

   Is there voltage over 15.1 V?

   YES—Repair the voltage regulator.■

   NO—Go to step 5.

5. Release the accelerator pedal, and let the engine idle.

6. Make sure all accessories are turned off. Turn the selector switch to position 2 (charging).

7. Remove the inductive pick-up, and zero the ammeter.

8. Place the inductive pick-up over the B terminal wire of the alternator so that the arrow points away from the alternator.

9. Raise the engine speed to 2,000 rpm, and hold it there.

   Is there voltage less than 13.5 V?

   YES—Repair the alternator components (see page 4-35).■

   NO—Go to step 10.

10. Apply a load with the VAT-40 until the battery voltage drops to between 12-13.5 V.

    Is the amperage 75 A or more?

    YES—The charging system is OK.■

    NO—Go to step 11.

11. With the engine speed still at 2,000 rpm, full-field the alternator Attach the probe to the VAT-40 full-field test lead, and insert the probe into the full field sccess hold at the back of the alternator. Switch the field selector to the "A (Ground)" position momentarily, and check the amperage reading. Because voltage will rise will rise quickly when the alternator is full-fielded, do not allow the voltage to exceed 18 V: it may damage the electrical system.

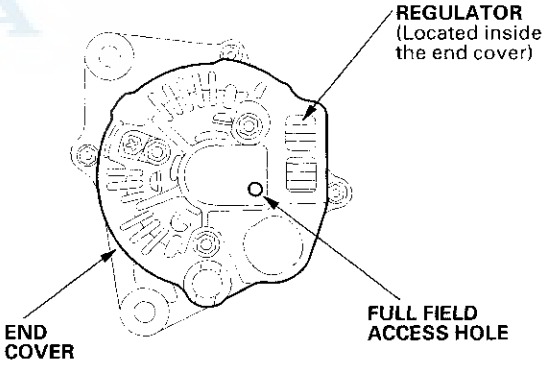

Is the alternator out put 75 A or more ?

YES—Replace the voltage regulator.■

NO—Repair the alternator components (see page 4-35).■

(cont'd)

Charging Circuit Troubleshooting (cont'd)

Alternator Control System Test

1. Check for proper operation of the ELD by confirming with the MIL.
2. Disconnect the 4P connector from the alternator.
3. Start the engine and turn the headlights (high beam) ON.
4. Measure voltage between the 4P connector terminal No. 2 and the positive terminal of the battery.

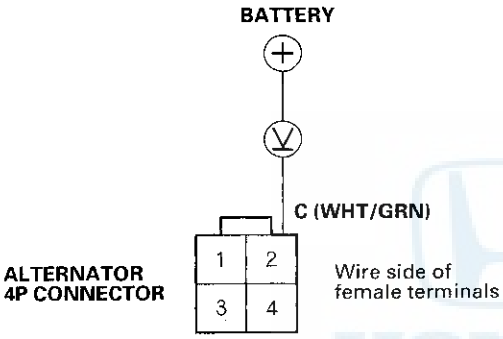

Is there 1 V or less?

YES—Go to step 8.

NO—Go to step 5.

5. Turn the headlight and ignition switch OFF.
6. Disconnect the PCM connector C (31P).
7. Check for continuity between the PCM connector terminal C2 and body ground.

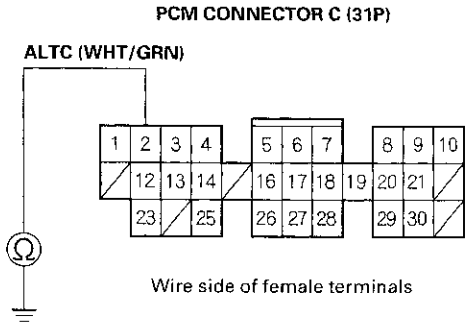

Is there continuity?

YES—Repair short in the wire between the alternator and PCM. ■

NO—Substitute a known-good PCM, and recheck; refer to the '98-'01 Accord Service Manual. If prescribed voltage is now available, replace the original PCM. ■

8. Turn the headlight and ignition switch OFF.
9. Disconnect the PCM connector C (31P).
10. Check for continuity between the PCM connector terminal C2 and alternator 4P connector terminal No. 2.

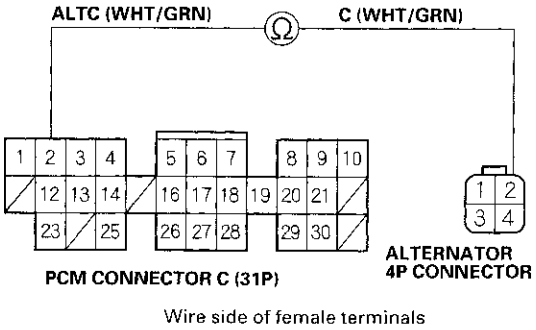

Is there continuity?

YES—Test the alternator/regulator. ■

NO—Repair open in the wire between the alternator and PCM. ■

Alternator-compressor Belt Inspection and Replacement

1. Inspect the belt for cracks and damaged. If the belt is cracked or damaged, replace it.

2. Check that the pointer (A) on the auto-tensioner housing is not beyond the edge of the indicator rib (B) on the tensioner base.

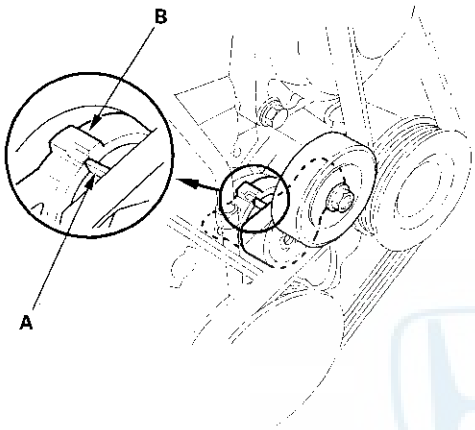

3. Move the auto-tensioner (A) to relieve tensioner from the alternator belt (B), and remove the alternator belt.

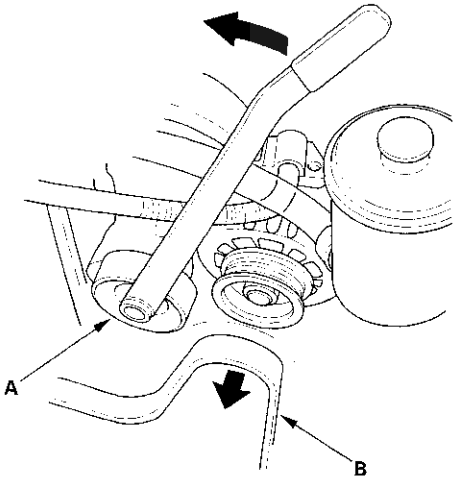

4. Install the new belt in reverse order of removal.

Alternator Replacement

1. Make sure you have the anti-theft code for the radio, then write down the frequencies for the radio's preset buttons.

2. Disconnect the battery negative cable, then disconnect the positive cable.

3. Move the auto-tensioner (A) to relieve tension from the alternator belt (B), and remove the alternator belt.

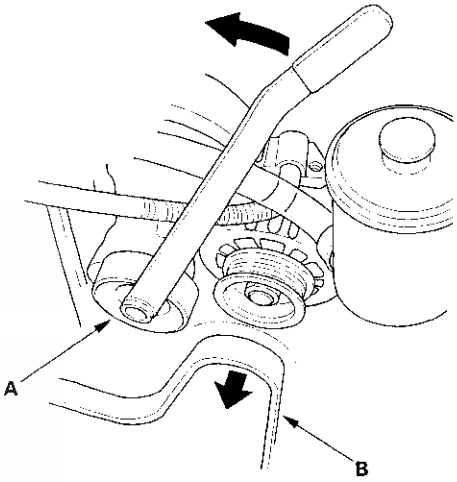

(cont'd)

Alternator Replacement (cont'd)

4. Disconnect the condenser fan motor connector (A) from the condenser fan shroud.

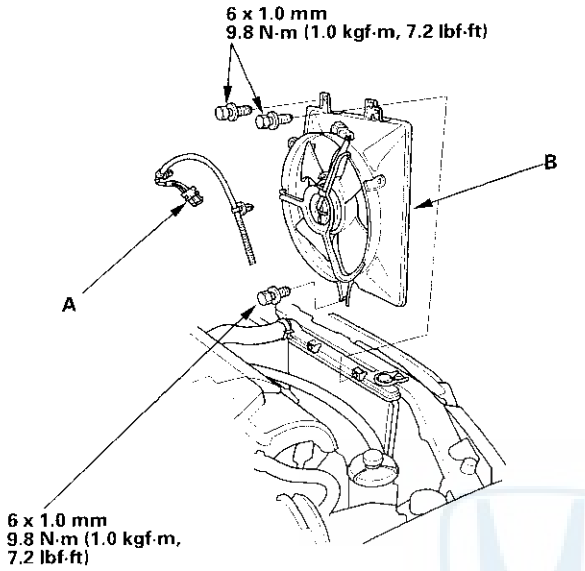

5. Remove the condenser fan/shroud assembly (B).

6. Disconnect the 4P connector (A) and BLK wire (B) from the alternator.

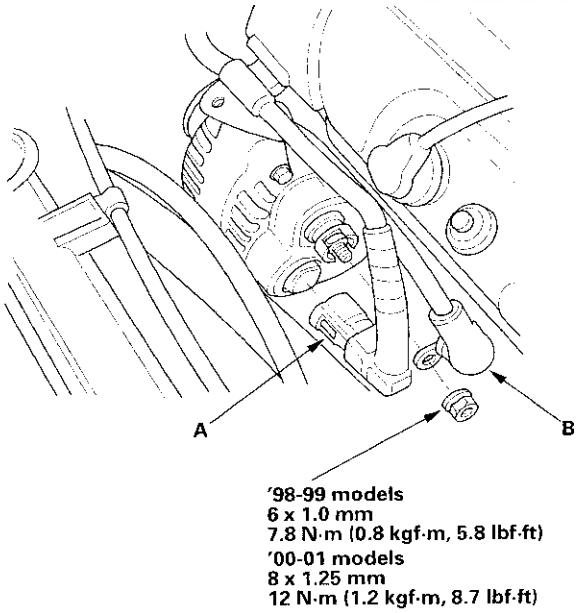

7. Remove the mount bolt (A) and alternator bracket mounting bolt (B), then remove the harness clamp (C) from the alternator bracket.

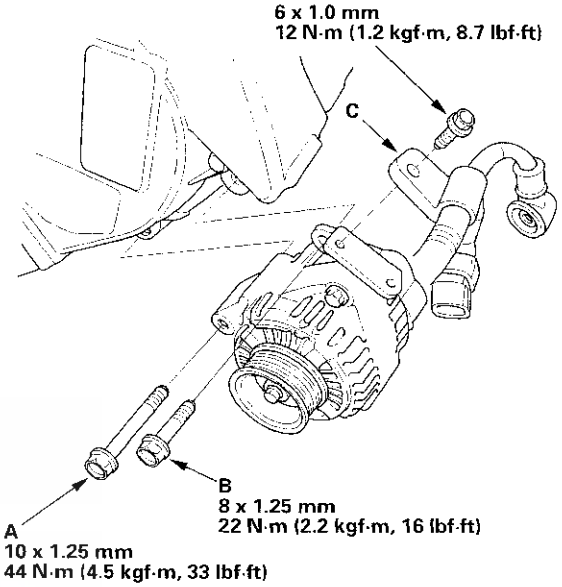

8. Install in the reverse order of removal.

9. Enter the anti-theft code for the radio, then enter the customer's radio station presets.

Auto-tensioner Inspection/Replacement

1. Check the position of the auto-tensioner indicator's pointer (A), start the engine, then check the position of the pointer again. If the position changes, go to step 5.

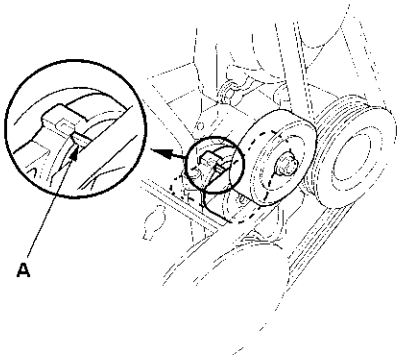

2. Check for abnormal noise from the tensioner pulley. If you hear abnormal noise, replace the tensioner pulley.

3. Stop the engine, then remove the alternator belt (see page 4-31).

4. Check if the auto-tensioner (A) moves smoothly and check for abnormal noise when the pulley is turned counterclockwise with the designated tool. If the auto-tensioner does not move smoothly or if the there is abnormal noise. Replace the auto-tensioner. Do not move the auto-tensioner beyond its limit.

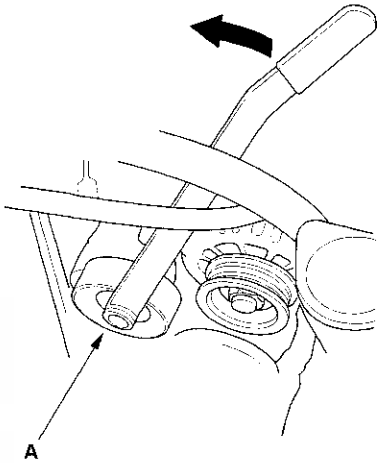

5. Remove the auto-tensioner.

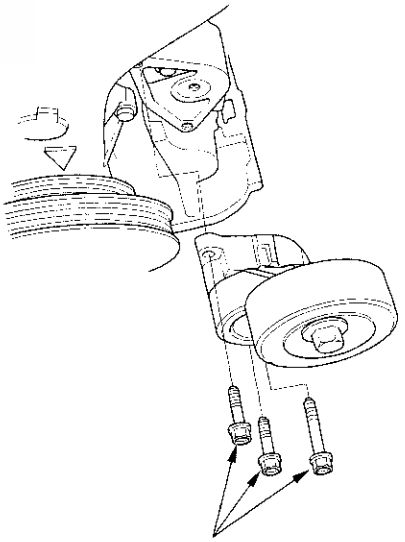

6 x 1.0 mm
12 N·m (1.2 kgf·m, 8.7 lbf·ft)

(cont'd)

Auto-tensioner Inspection/Replacement (cont'd)

6. Clamp the auto-tensioner (A) by using 2 bolts (6 mm diameter) (B) and vise (C) in a vise as shown. Do not clamp the auto-tensioner itself.

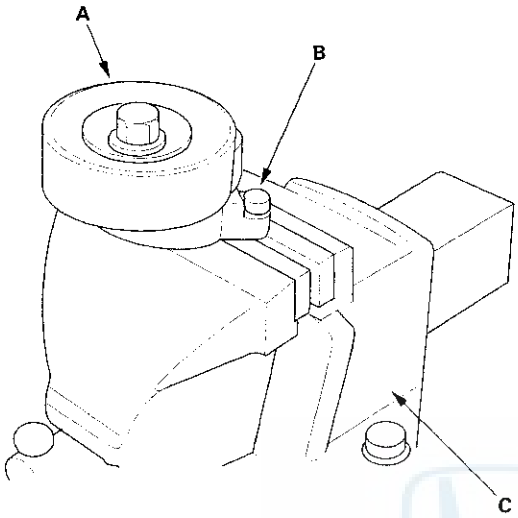

7. Attach a torque wrench (A) to the pulley bolt. Measure the torque when the tensioner is turned counterclockwise. If the torque is less than specified value, replace the auto tensioner.

23 N·m (2.3 kgf·m, 17 lbf·ft)

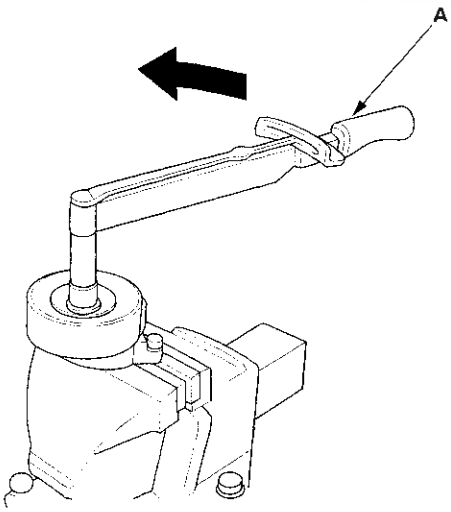

8. If necessary, remove the pulley bolt (A) (left-hand threads), and replace the tensioner pully (B).

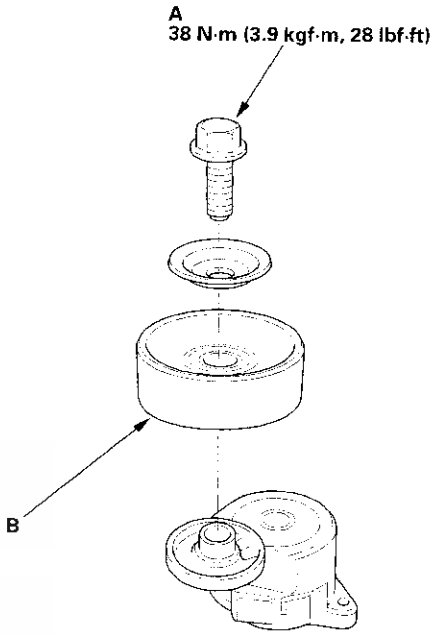

Alternator Overhaul - '00-01 models

Exploded View

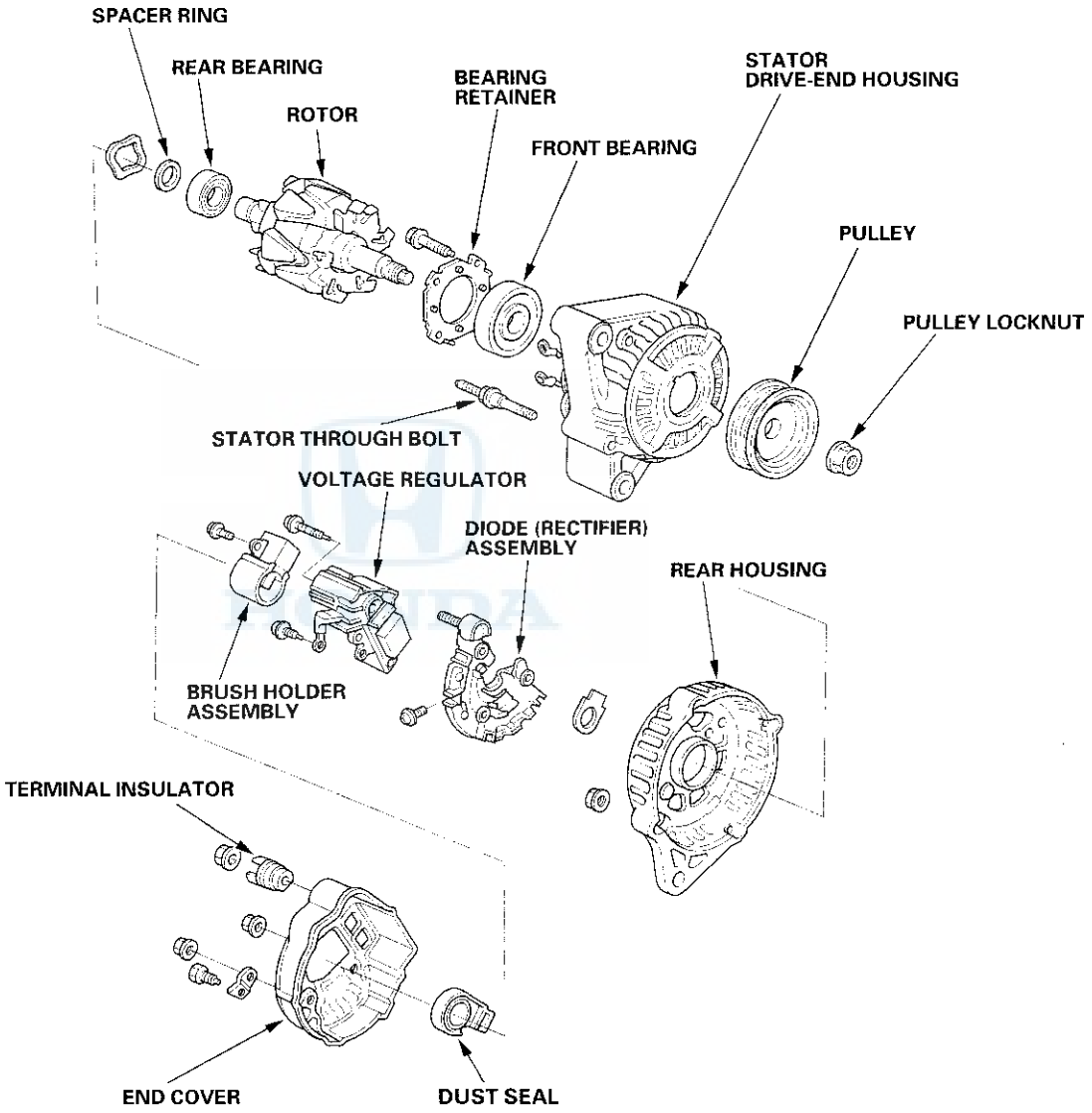

(cont'd)

Alternator Overhaul - '00-01 models (cont'd)

Special Tools Required
- Driver 07749-0010000
- Driver Attachment, 52 x 55 mm 07746-0010400

NOTE: Refer to the Exploded View as needed during this procedure.

1. Test the alternator and regulator before you remove them (see step 1 on page 4-27).

2. Remove the alternator (see page 4-31).

3. If the front bearing needs replacing, remove the pulley locknut with a 10 mm wrench (A) and a 22 mm wrench (B). If necessary, use an impact wrench.

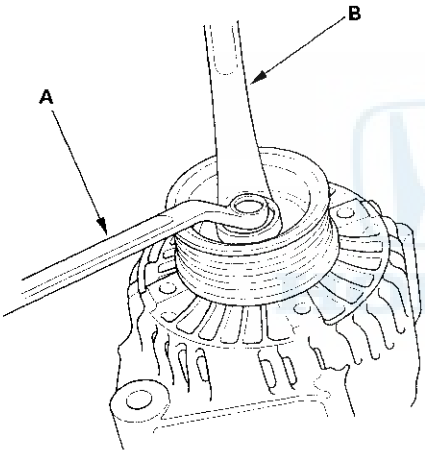

4. Remove the 3 flange nuts (A) and the screw (B) from the alternator, then remove the plate terminal (C).

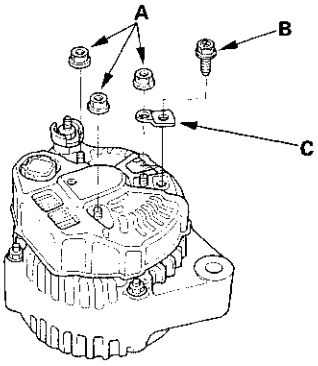

5. Remove the washer nut (A) and insulator (B) from the "B" terminal, then remove the end cover (C) and dust seal (D).

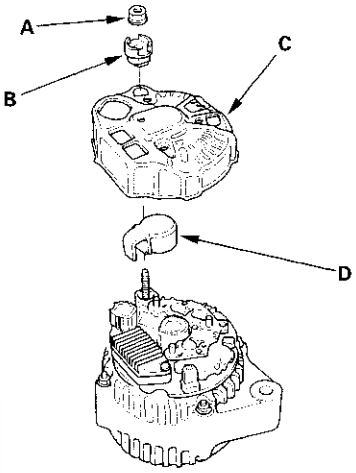

6. Remove the brush holder.

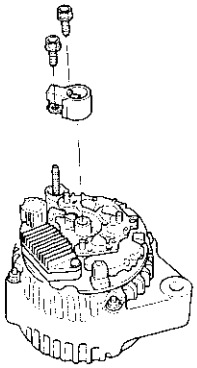

7. Remove the voltage regulator.

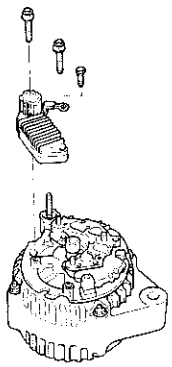

8. Remove the 4 screws (A), then remove the rectifier (B) and rubber seal (C).

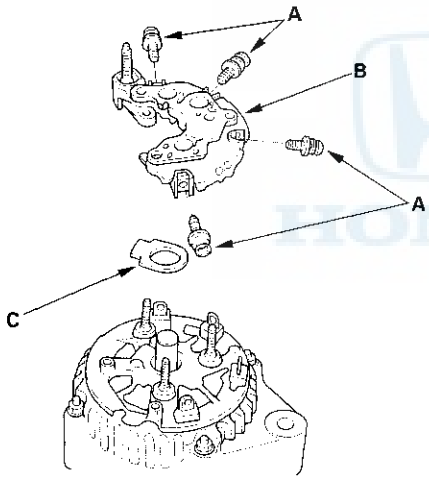

9. Remove the 4 flange nuts.

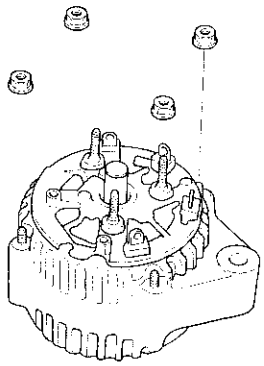

10. Remove the 4 insulators (A), rear housing (B) and washer (C).

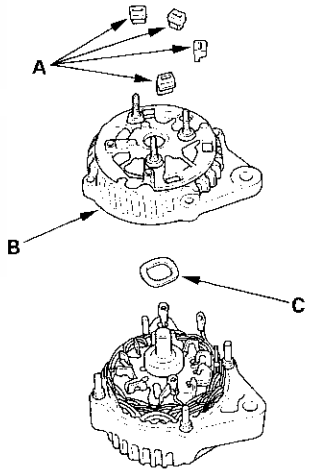

(cont'd)

Alternator Overhaul - '00-01 models (cont'd)

11. (If you are not replacing the front bearing and/or rear bearing, go to step 18). Remove the rotor from the stator drive end housing.

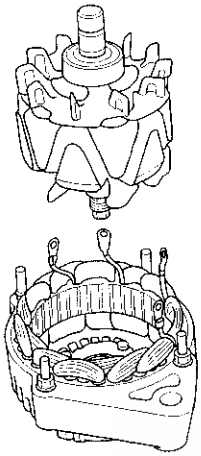

12. Inspect the rotor shaft for galling, and inspect the bearing journal surface in the stator housing for seizure marks.

    - If either the rotor or stator housing is damaged, replace the alternator.
    - If both the rotor and the stator housing are OK, go to step 13.

13. Remove the rear bearing using a puller as shown.

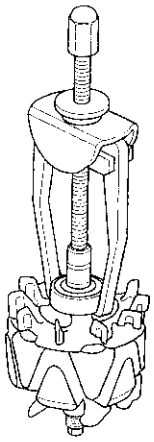

14. With a hammer and commercially available tools shown, install a new rear bearing in the rotor shaft.

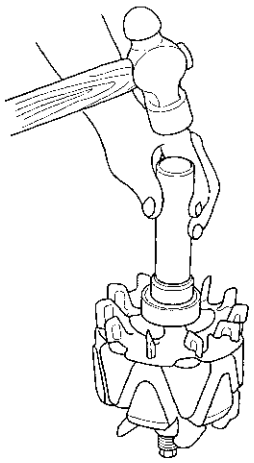

15. Remove the front bearing retainer plate.

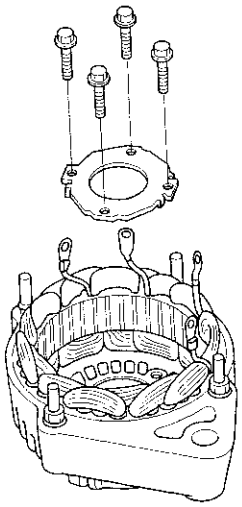

16. Support the stator housing in a vise, and drive out the front bearing with a brass drift (A) and hammer.

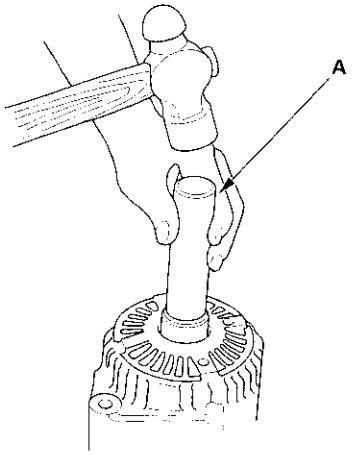

17. With a hammer and the special tools, install a new front bearing in the stator housing.

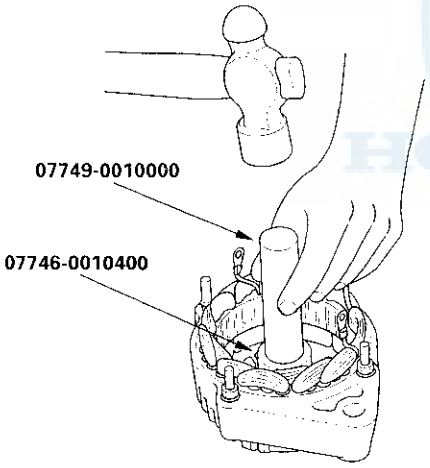

Rectifier Test

18. Check for continuity in each direction, between the B terminal (A) and P terminals (B), and between the E terminal (C) and P terminals (B) of each diode pair. All diodes should have continuity in only one direction. Because the rectifier diodes are designed to allow current to pass in one direction, and the rectifier is made up of 8 diodes (4 pairs), you must test each diode in both directions for continuity with an ohmmeter that has diode checking capability: a total of 16 checks.

- If any diode failed, replace the rectifier assembly. (Diodes are not available separately.)
- If all the diodes are OK, go to step 19.

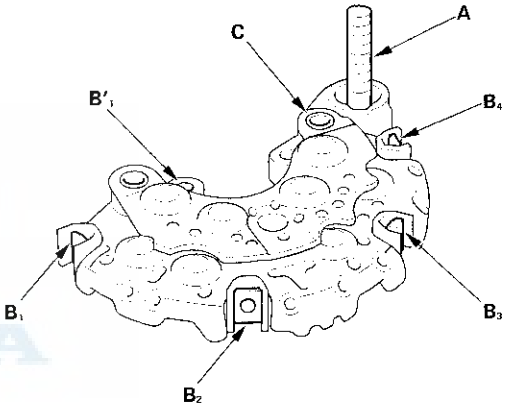

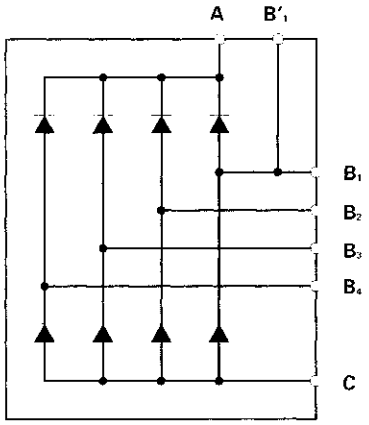

(cont'd)

Alternator Overhaul - '00-01 models (cont'd)

Alternator Brush Inspection

19. Measure the length of both brushes (A) with a vernier caliper (B).

    - If either brush is shorter than the service limit, replace the brush assembly.
    - If brush length is OK, go to step 20.

    Alternator Brush Length:
    Standard (New): 10.5 mm (0.41 in.)
    Service Limit: 1.5 mm (0.06 in.)

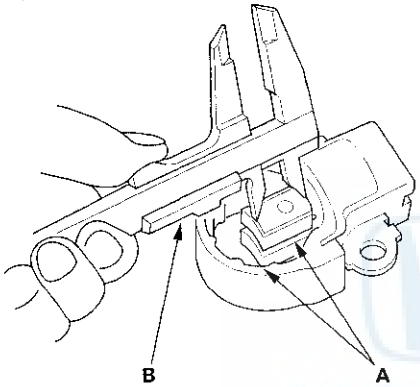

Rotor Slip Ring test

20. Check that there is continuity between the slip rings (A).

    - If there is continuity, go to step 21.
    - If there is no continuity, replace the alternator.

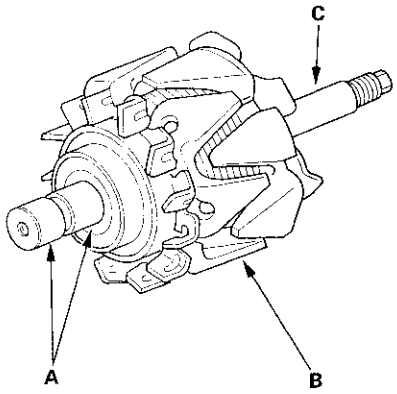

21. Then check that there is no continuity between each slip ring (A) and the rotor (B) and the rotor shaft (C).

    - If there is no continuity, go to step 22.
    - If there is continuity, replace the alternator.

Stator Test

22. Check that there is continuity between each pair of leads (A).

    - If there is continuity, go to step 23.
    - If there is no continuity, replace the alternator.

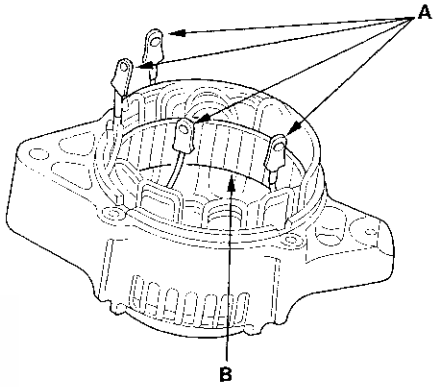

23. Check for no continuity between each lead and the coil core (B).

    - If there is no continuity, go to step 24.
    - If there is continuity, replace the alternator.

24. Reassemble the alternator in reverse order of disassembly, and note these items:

    - Be careful not to get any grease or oil on the slip rings.
    - If you removed the pulley, tighten its locknut to 111 N·m (11.3 kgf·m, 81.7 lbf·ft) when you reinstall it.

Cruise Control

Component Location Index

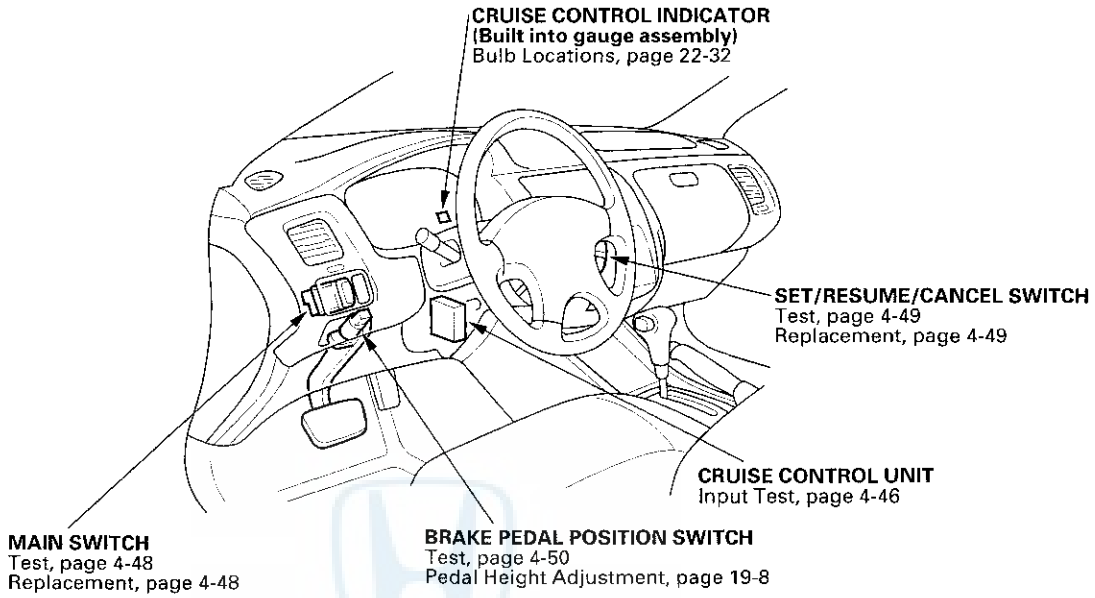

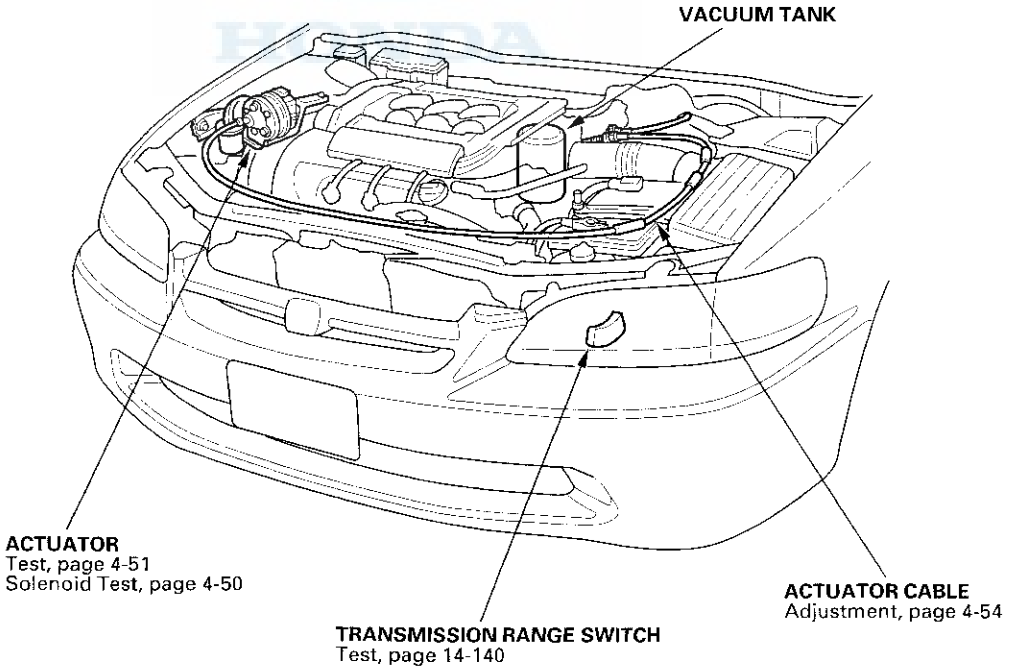

Circuit Diagram

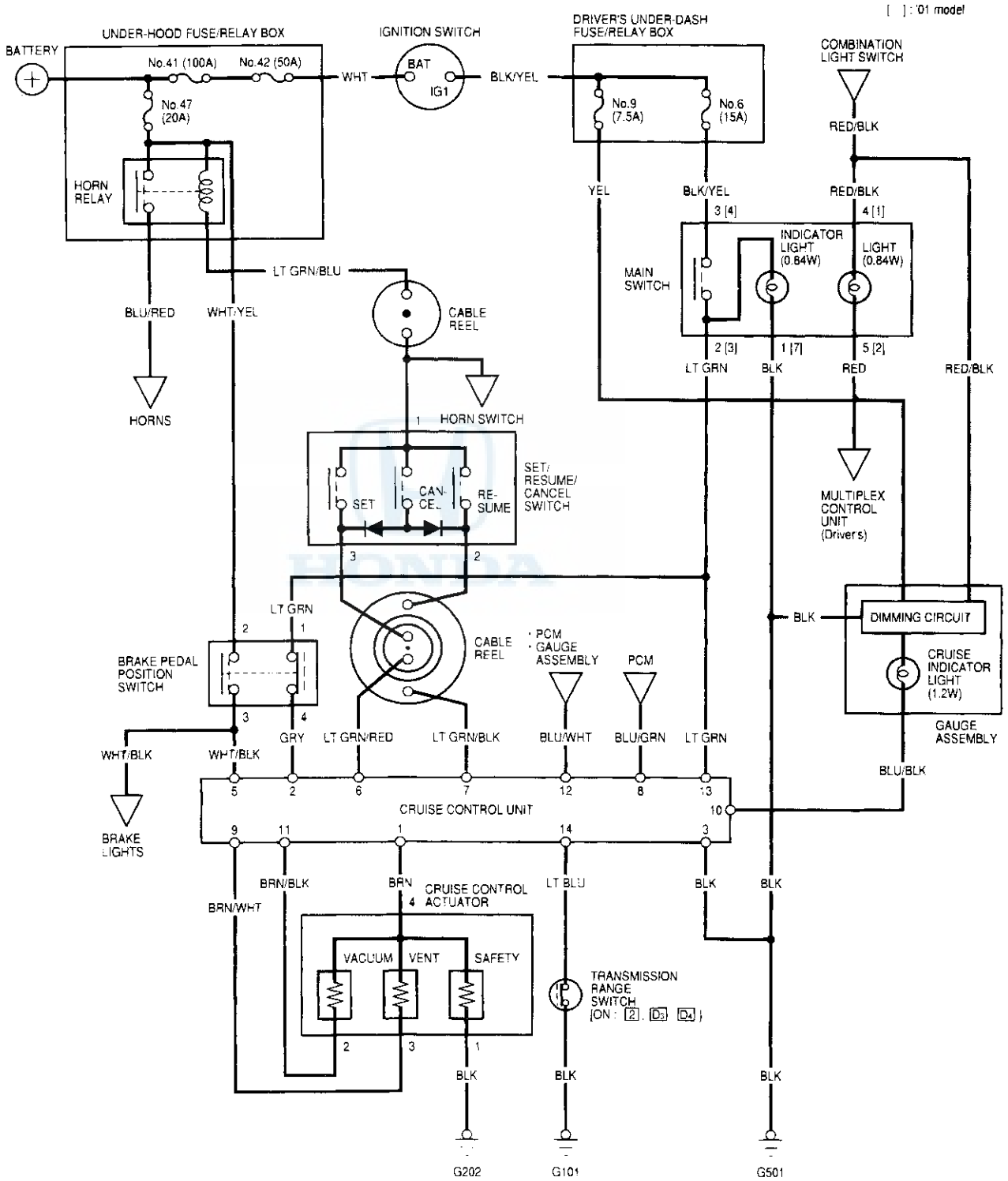

Symptom Troubleshooting Index

NOTE:
- The numbers in the table show the troubleshooting sequence.
- Before troubleshooting,
  - check that the speedometer works properly.
  - check for proper engine vacuum at the actuator.
  - check the No. 9 (7.5A) and No. 6 (15A) fuses in the driver's under-dash fuse/relay box, and No. 47 (20A) fuse in the under-hood fuse/relay box.
  - check that the horn sounds.
  - check the tachometer to see if it works properly.

Symptom	Diagnostic procedure	Also check for
Cruise control cannot be set.	1. Check main switch (see page 4-48) 2. Check SET/RESUME/CANCEL switch (see page 4-49) 3. Check brake pedal position switch and mounting (see page 4-50) 4. Check transmission range switch (see page 14-140) 5. Check control unit (see page 4-46)	• Poor ground: G101 • Open circuit, loose or disconnected terminals: LT GRN, LT GRN/RED, GRY, LT BLU, BLU/WHT
Cruise control can be set, but indicator light does not go on.	1. Check dimming circuit in gauge (see page 22-33) 2. Check control unit (see page 4-46)	• Poor ground: G501 • Open circuit, loose or disconnected terminals: YEL, BLU/BLK
Cruise speed is noticeably higher or lower than what was set.	1. Check actuator and cable deflection (see page 4-51) 2. Check control unit (see page 4-46)	
Excessive overshooting or undershooting when trying to set speed.	1. Check actuator and cable deflection (see page 4-51) 2. Check control unit (see page 4-46)	
Speed fluctuates on a flat road with cruise control set.	1. Check actuator and cable deflection (see page 4-51) 2. Check control unit (see page 4-46)	
Vehicle does not decelerate or accelerate accordingly when SET/RESUME/CANCEL button is pushed.	1. Check SET/RESUME/CANCEL switch (see page 4-49) 2. Check control unit (see page 4-46)	Open circuit, loose or disconnected terminals: LT GRN/RED, LT GRN/BLK
Set speed not cancelled (engine rpm stays high) when shift lever is moved to N position.	1. Check transmission range switch (see page 14-140) 2. Check control unit (see page 4-46)	Open circuit, loose or disconnected terminals, short to ground: LT BLU
Set speed is not cancelled when brake pedal is pushed.	1. Check brake pedal position switch and mounting (see page 4-50) 2. Check control unit (see page 4-46)	Open circuit, loose or disconnected terminals: WHT/BLK

(cont'd)

Symptom Troubleshooting Index (cont'd)

Symptom	Diagnostic procedure	Also check for
Set speed does not cancelled when main switch is pushed OFF	1. Check main switch (see page 4-48) 2. Check control unit (see page 4-46)	Open circuit, loose or disconnected terminals, short to power: LT GRN
Set speed does not cancelled when CANCEL button is pushed	1. Check SET/RESUME/CANCEL switch (see page 4-49) 2. Check control unit (see page 4-46)	Open circuit, loose or disconnected terminals: LT GRN/RED, LT GRN/BLK
Set speed will not resume when RESUME button is pushed (with main switch on, set speed is temporarily cancelled).	1. Check SET/RESUME/CANCEL switch (see page 4-49) 2. Check control unit (see page 4-46)	Open circuit, loose or disconnected terminals: LT GRN/BLK
The transmission shifts down slower than normal when going up a hill with the cruise control on.	1. Troubleshoot the cruise control communication circuit (see page 4-45)	

Cruise Control Communication Circuit Troubleshooting

1. Start the engine.

2. Turn on the cruise control main switch, then drive the vehicle to speeds over 25 mph (40 km/h) with the cruise control.

   Does the cruise control operate?

   YES – Go to step 3.

   NO – Check the cruise control unit or cruise control actuator.■

3. Turn the ignition switch OFF.

4. Disconnect PCM connector A (32P) and cruise control unit 14P connector.

5. Check for continuity between the PCM connector terminal A5 and body ground.

PCM CONNECTOR A (32P)

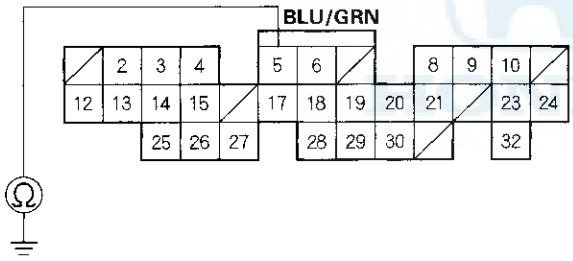

Wire side of female terminals

Is there continuity?

YES – Repair short in the wire between the PCM connector terminal A5 and the cruise control unit 14P connector terminal No. 8.■

NO – Go to step 8.

6. Reconnect PCM connector A (32P) and cruise control unit 14P connector.

7. Turn the ignition switch ON (II).

8. Measure the voltage between the No. 8 terminal of the cruise control unit connector and ground.

CRUISE CONTROL UNIT CONNECTOR

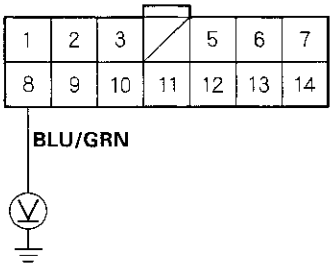

Wire side of female terminals

Is there approx. 1 V?

YES – Go to step 9.

NO – Replace the cruise control unit.■

9. Measure the voltage between the A5 terminal of the PCM connector and ground.

PCM CONNECTOR A (32P)

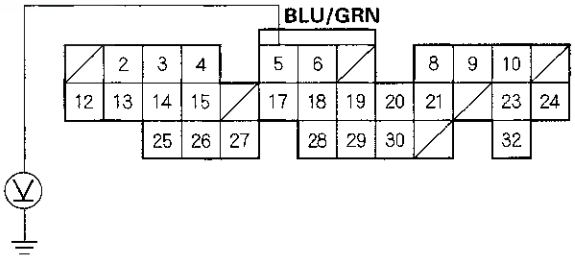

Wire side of female terminals

Is there approx. 1 V?

YES – Check for loose connectors. If necessary replace the PCM and recheck, refer to '98-01 Accord Service Manual (see page 11-3).■

NO – Repair or open in the BLU/GRN wire between the A5 terminal and the cruise control unit.■

Control Unit Input Test

SRS components are located in this area. Review the SRS component locations, precautions, and procedures in the SRS before performing repairs or service, refer to the '98-01 Accord Service Manual (see page 23-25).

1. Remove the driver's dashboard lower cover.

2. Disconnect the 14P connector from the control unit.

3. Inspect the connector and socket terminals to be sure they are all making good contact.

   - If the terminals are bent, loose, or corroded, repair them as necessary, and recheck the system.
   - If the terminals look OK, go to step 4.

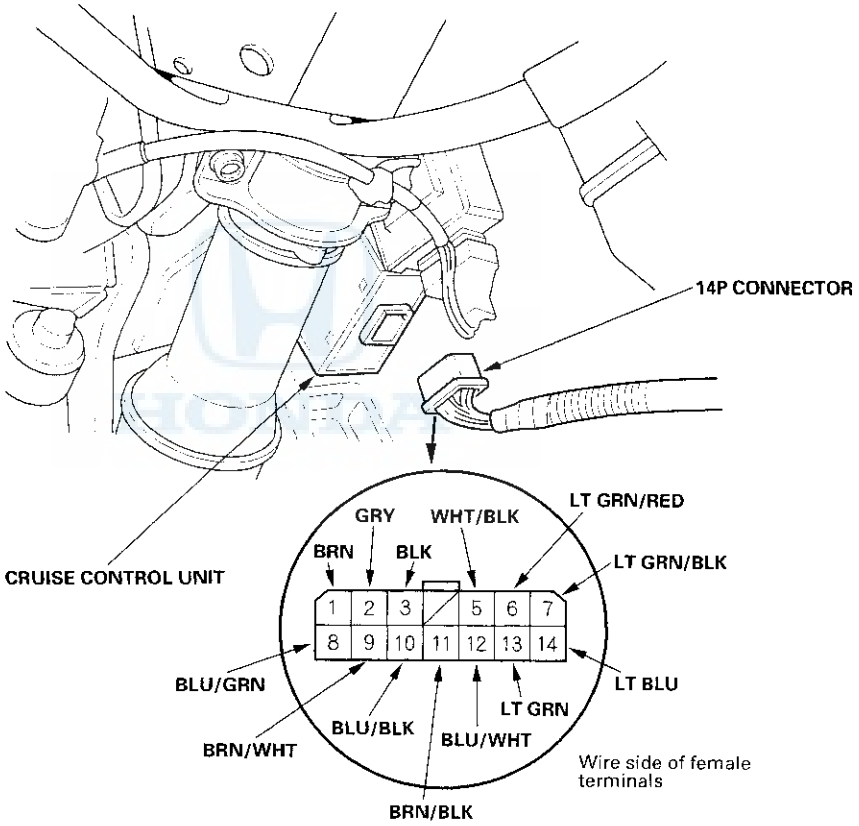

4. With the 14P connector disconnected, make these input tests.

Cavity	Wire	Test condition	Test: Desired result	Possible cause if result is not obtained
9	BRN/WHT	Under all conditions	Check for resistance to ground: There should be 80 – 120 Ω.	• Faulty actuator solenoid • Poor ground (G202) • An open in the wire
1	BRN	Under all conditions	Check for resistance to ground: There should be 40 – 60 Ω.	
11	BRN/BLK	Under all conditions	Check for resistance to ground: There should be 70 – 110 Ω.	

Cavity	Wire	Test condition	Test: Desired result	Possible cause if result is not obtained
2	GRY	Ignition switch ON (II), main switch ON and brake pedal depressed, then released	Check for voltage to ground: There should be 0 V with the pedal depressed and battery voltage with the pedal released.	• Faulty brake pedal position switch • An open in the wire
3	BLK	Under all conditions	Check for continuity to ground: There should be continuity.	• Poor ground (G501) • An open in the wire
5	WHT/BLK	Brake pedal depressed, then released	Check for voltage to ground: There should be battery voltage with the pedal depressed, and 0 V with the pedal released.	• Blown No. 47 (20A) fuse in the under-hood fuse/relay box • Faulty brake pedal position switch • An open in the wire
6	LT GRN/ RED	Set button pushed	Check for voltage to ground: There should be battery voltage.	• Blown No. 47 (20A) fuse in the under-hood fuse/relay box • Faulty horn relay • Faulty set/resume/cancel switch • Faulty cable reel • An open in the wire
7	LT GRN/ BLK	Resume button pushed		
10	BLU/BLK	Ignition switch ON (II)	Attach to ground: Cruise indicator light in the gauge assembly should comes on.	• Blown bulb • Blown No. 9 (7.5A) fuse in the under-dash driver's fuse/relay box • Faulty dimming circuit in the gauge assembly • An open in the wire
12	BLU/WHT	Ignition switch ON (II) and main switch ON; raise the front of the vehicle, and rotate 1 wheel slowly while holding the other wheel	Check for voltage between the BLU/WHT (+) and BLK (−) terminals: There should be 0−5 V or more −0−5 V or more repeatedly.	• Faulty vehicle speed sensor • An open in the wire
13	LT GRN	Ignition switch ON (II) and main switch ON	Check for voltage to ground: There should be battery voltage.	• Blown No. 6 (15A) fuse in the under-dash driver's fuse/relay box • Faulty main switch • An open in the wire
14	LT BLU	Shift lever in 2, D3 or D4	Check for continuity to ground: There should be continuity.	• Faulty transmission range switch • Poor ground (G401) • An open in the wire
8	BLU/GRN	Reconnect the cruise control unit 14P connector, start the engine, main switch ON and drive the vehicle to speeds over 25 mph (40 km/h) with the cruise control set.	Check for voltage to ground: There should be approx. 1V	• Faulty cruise control unit • Short to ground

5. If any test indicates a problem, find and correct the cause, then recheck the system. If all the input tests prove OK, the control unit must be faulty; replace it.

Main Switch Test/Replacement

'98-00 models:

1. Carefully pry the switch (A) out of the instrument panel.

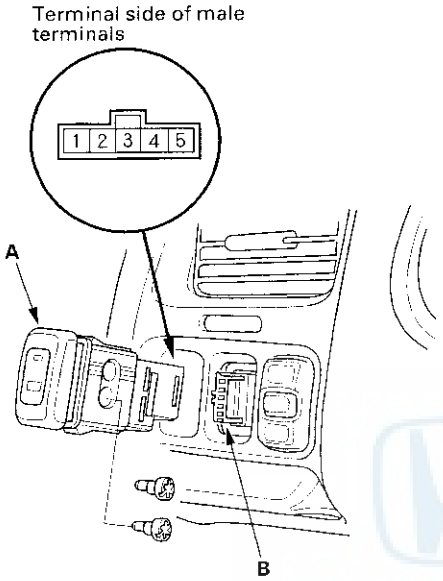

2. Disconnect the 5P connector (B) from the switch.
3. Check for continuity between the terminals in each switch position according to the table. If there is no continuity, replace the switch.

Position \ Terminal	1		2	3	4		5
OFF	○	⊖	○		○	⊖	○
ON	○	⊖	○	○	○	⊖	○

'01 model:

1. Carefully pry the switch (A) out of the instrument panel.

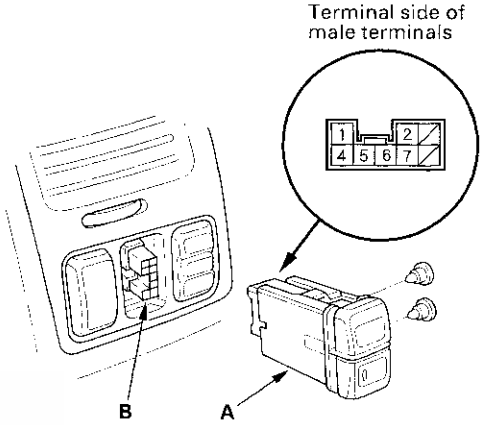

2. Disconnect the 8P connector (B) from the switch.
3. Check for continuity between the terminals in each switch position according to the table. If there is no continuity, replace the switch.

Position \ Terminal	4		7	5	1		2
OFF	○	⊖	○		○	⊖	○
ON	○	⊖	○	○	○	⊖	○

Set/Resume/Cancel Switch Test/Replacement

1. Carefully remove the set/resume/cancel switch cover (A) by prying between the cover and the switch (B) in the sequence shown.

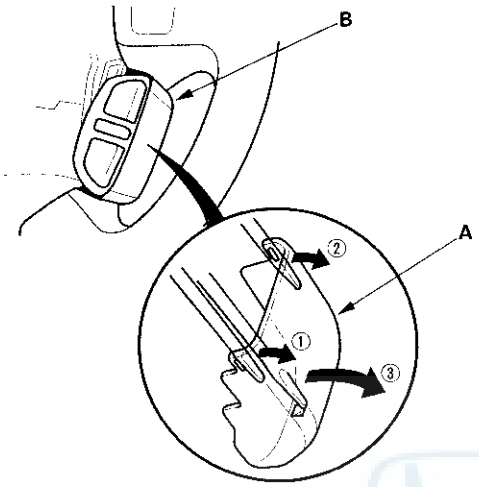

2. Remove the 2 screws (A), then remove the switch (B).

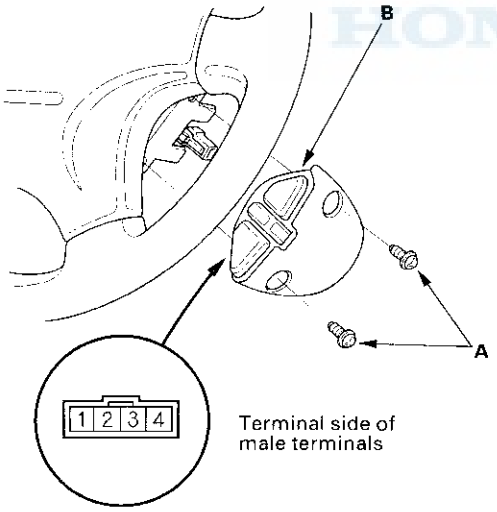

3. Check for continuity between the terminals in switch position according to the table.

   - If there is continuity and it matches the table, but switch failure is occurred on the cruise control unit input test, check and repair the wire harness on the switch circuit.
   - If there is no continuity in one or both positions, replace the switch.

Terminal / Position	1		2	3
SET (ON)	○			○
RESUME (ON)	○		○	
CANCEL (ON)	○	▸		○
		▸	○	

Brake Pedal Position Switch Test

1. Disconnect the 4P connector from the switch (A).

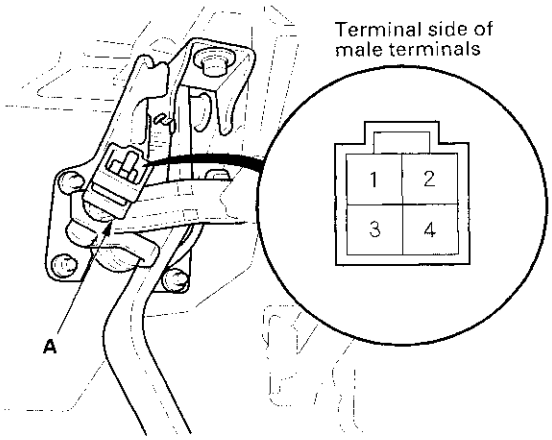

2. Remove the brake pedal position switch.

3. Check for continuity between the terminals according to the table.

Terminal / Brake Switch	1	2	3	4
DEPRESSED		○	○	
RELEASED	○			○

4. If necessary, replace the switch or adjust the pedal height, refer to '98-01 Accord Service Manual (see page 19-5).

Actuator Solenoid Test

1. Disconnect the 4P connector (A) from the actuator.

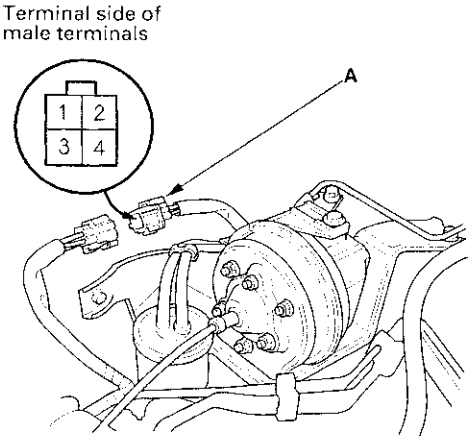

2. Check for resistance between the terminals according to the table.

NOTE: Resistance will vary slightly with temperature; specified resistance is at 70°F (20°C).

Terminal / Resistance (Ω)	1	2	3	4
VENT SOLENOID 40—60 Ω			○	○
VACUUM SOLENOID 30—50 Ω		○		○
SAFETY SOLENOID 40—60 Ω	○			○

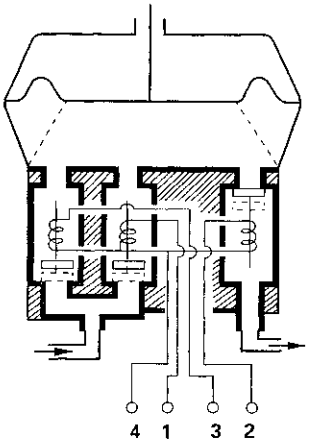

Actuator Test

Special Tools Required
Vacuum Pump/Gauge, 0 – 30 in.Hg
A973X-041-XXXXX

1. Disconnect the actuator cable from the actuator rod and disconnect the 4P connector (A).

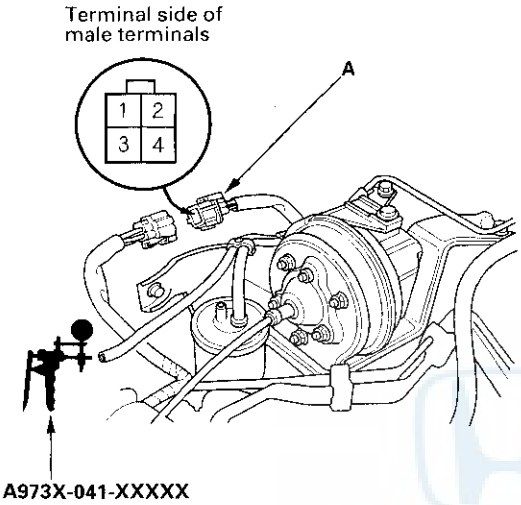

2. Connect battery power to the No. 4 terminal and ground the No. 1, No. 2 and No. 3 terminals.

3. Connect a vacuum pump to the vacuum hose, then apply vacuum to the actuator.

4. The actuator rod (A) should pull in completely. If the rod pulls in only part-way or not at all, check for a leaking vacuum line or defective solenoid.

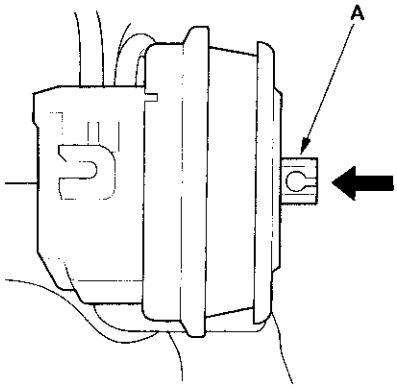

5. With voltage and vacuum still applied, try to pull the actuator rod out by hand. You should not be able to pull it out. If you can, it is defective.

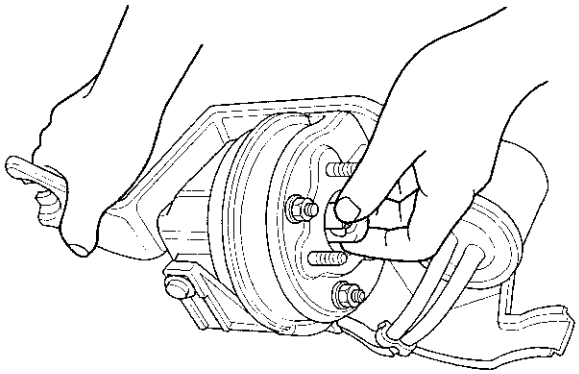

6. Disconnect ground from the No. 3 terminal. The actuator rod should return. If it does not return, but the vent hose and filter are not plugged, the solenoid valve assembly is defective.

7. Repeat steps 2 through 5, and disconnect ground from the No. 1 terminal. The actuator rod should return. If it does not return, but the vent hose and filter are not plugged, the solenoid valve assembly is defective.

8. If you replace the solenoid valve assembly, be sure to use new O-rings on each solenoid.

9. Disconnect power and ground from the 4P connector. Disconnect the vent hose from the actuator. Connect a vacuum pump to the actuator vent hose port, and apply vacuum. The actuator rod should pull in completely. If not, the vacuum valve is stuck open. Replace the actuator.

Actuator/Solenoid/Cable Replacement

Removal/Installation

1. Disconnect the 4P connector (A) from the actuator.

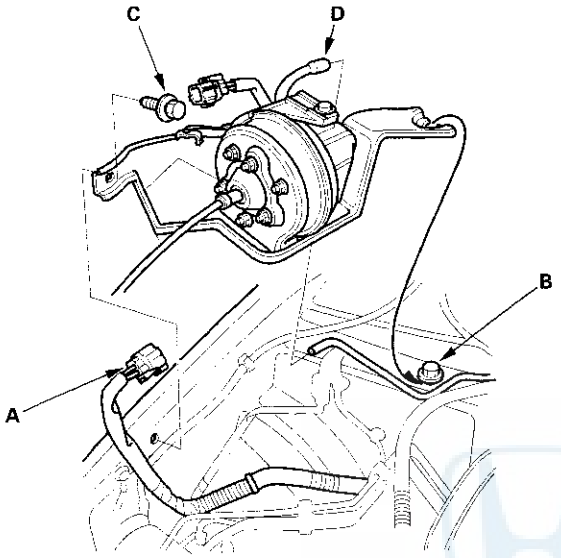

2. Loosen the mounting bolt (B), and remove the mounting bolt (C), then remove the actuator with the bracket.

3. Disconnect the vacuum hose (D).

4. Remove the 3 nuts (A).

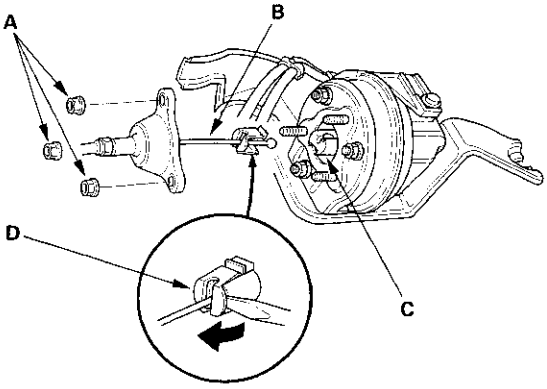

5. Disconnect the actuator cable (B) from the actuator rod (C) by releasing the clip (D) from the rod with a screwdriver.

6. Loosen the locknut (A), then disconnect the actuator cable (B) from the throttle linkage (C).

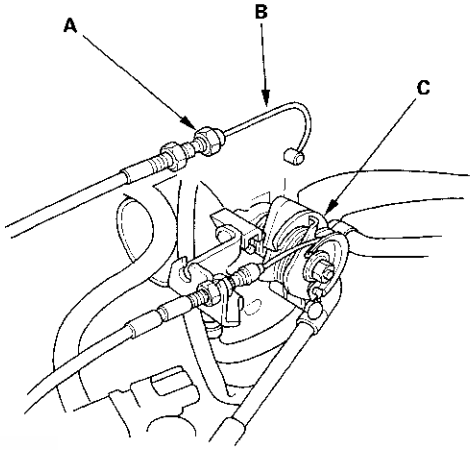

7. Install in the reverse order of removal, and adjust the free play at the throttle linkage after connecting the actuator cable.

Disassembly/Reassembly

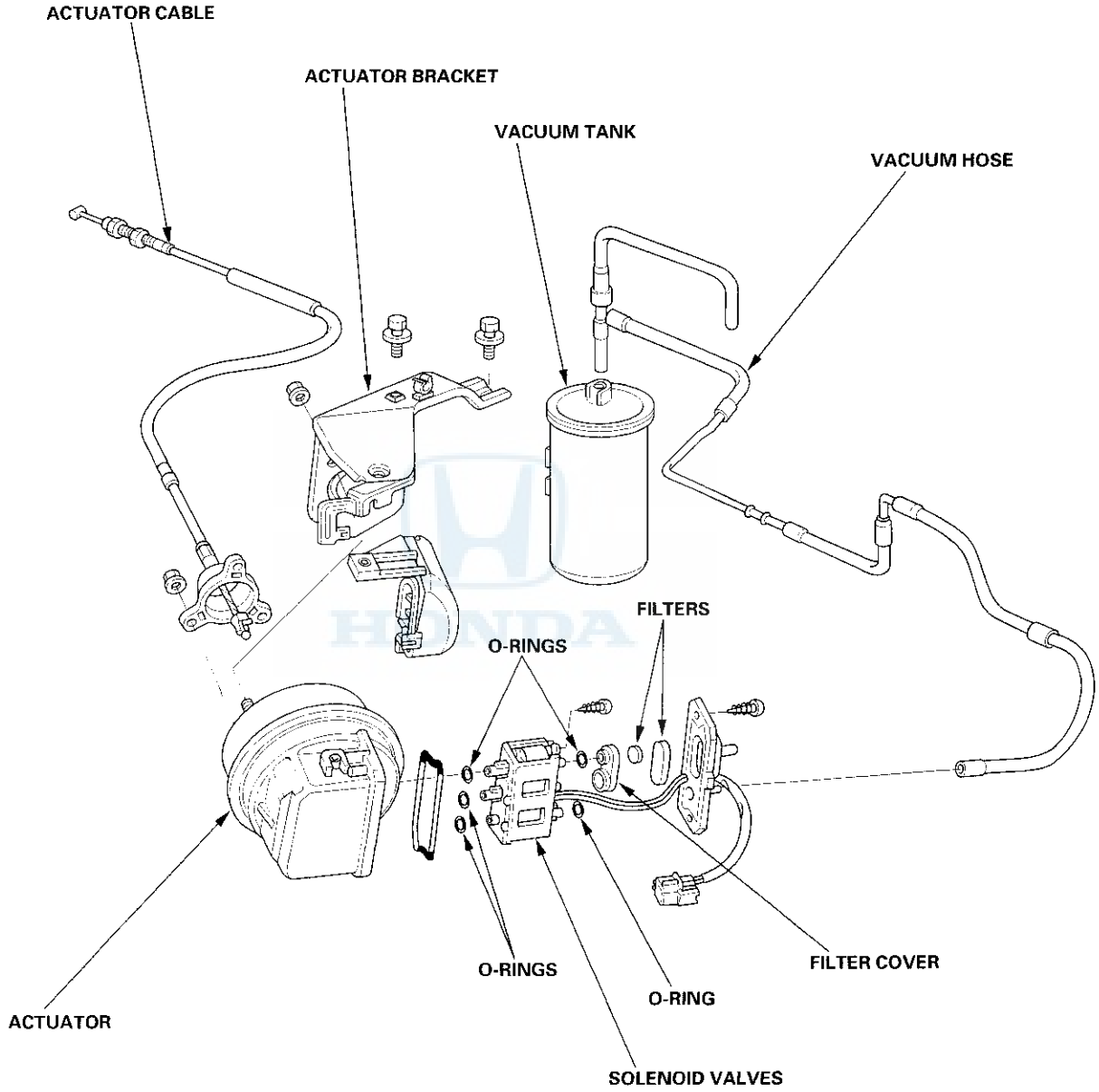

Actuator Cable Adjustment

1. Check that the actuator cable (A) moves smoothly with no binding or sticking.

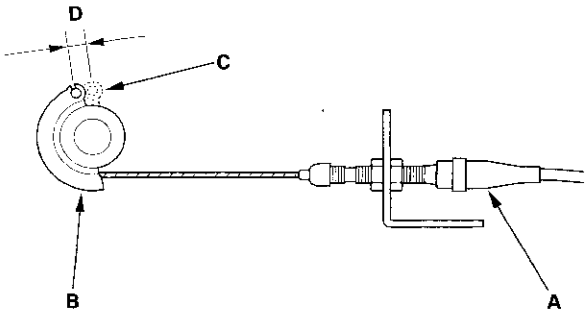

2. Start the engine. Hold the engine at 3,000 rpm with no load (N or P position) until the radiator fan comes on, then let it idle.

3. Measure the amount of movement of the output linkage (B) until the engine speed starts to increase. At first, the output linkage should be located at the fully closed position (C). The free play (D) should be 3.75±0.5 mm (0.15±0.02 in.).

4. If the free play is not within specs, move the cable to the point where the engine speed starts to increase, and tighten the locknut (A) and adjusting nut (B).

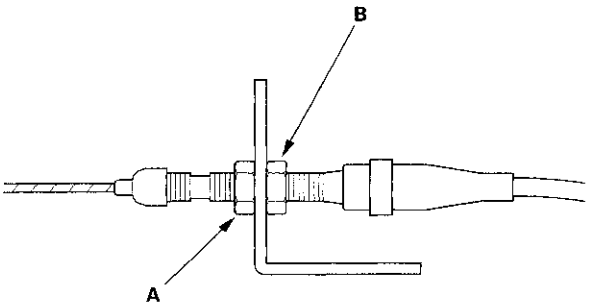

5. Turn the adjusting nut (A) until it is 3.75±0.5 mm (0.15±0.02 in.) away from the bracket (B).

3.75±0.5 mm (0.15±0.02 in.)

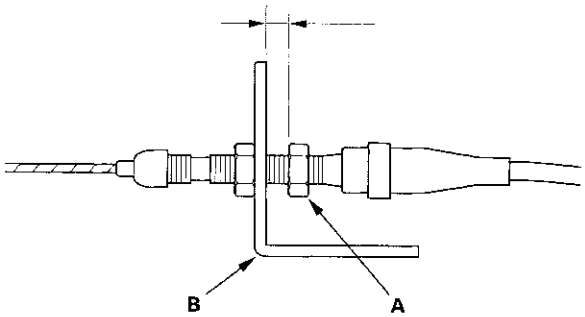

6. Pull the cable so that the adjusting nut (A) touches the bracket, and tighten the locknut (B).

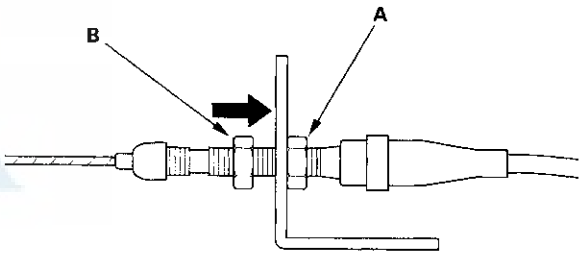

Engine Mount Control System

Component Location Index

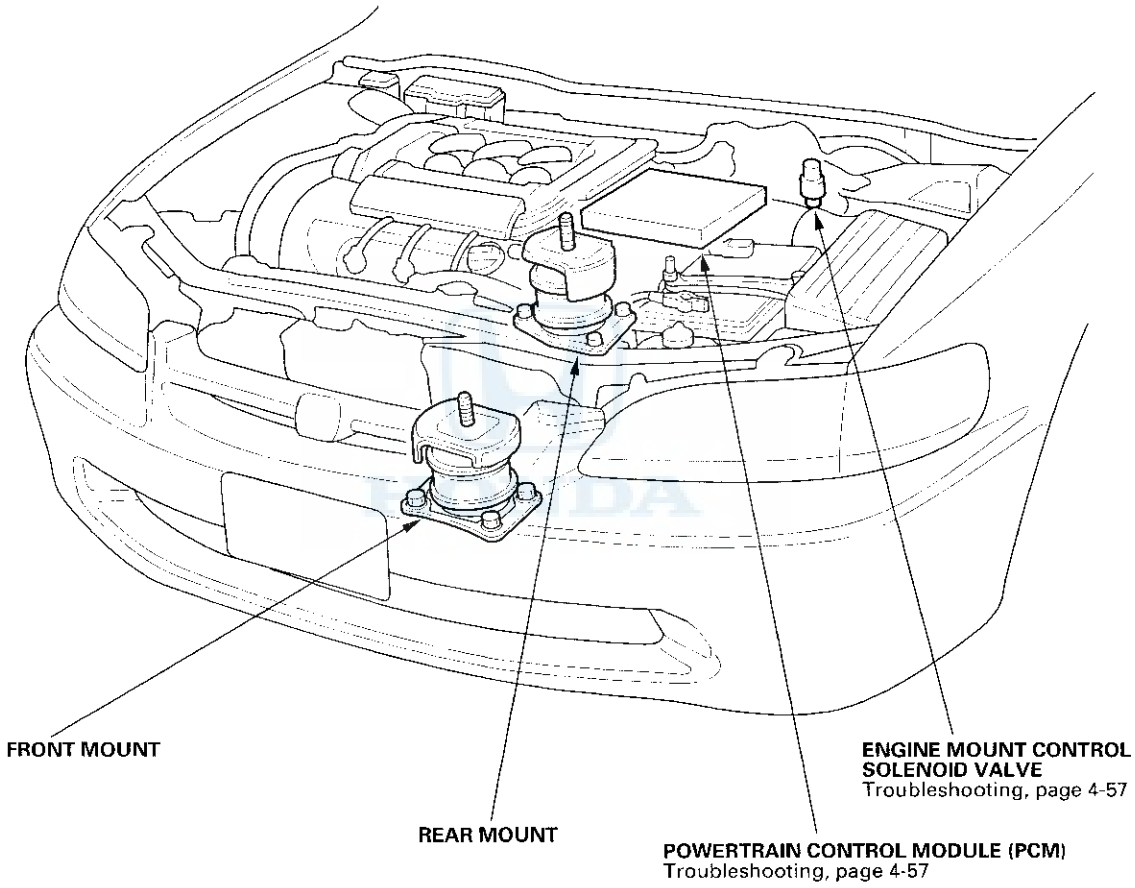

Engine Mount Control System

Circuit Diagram

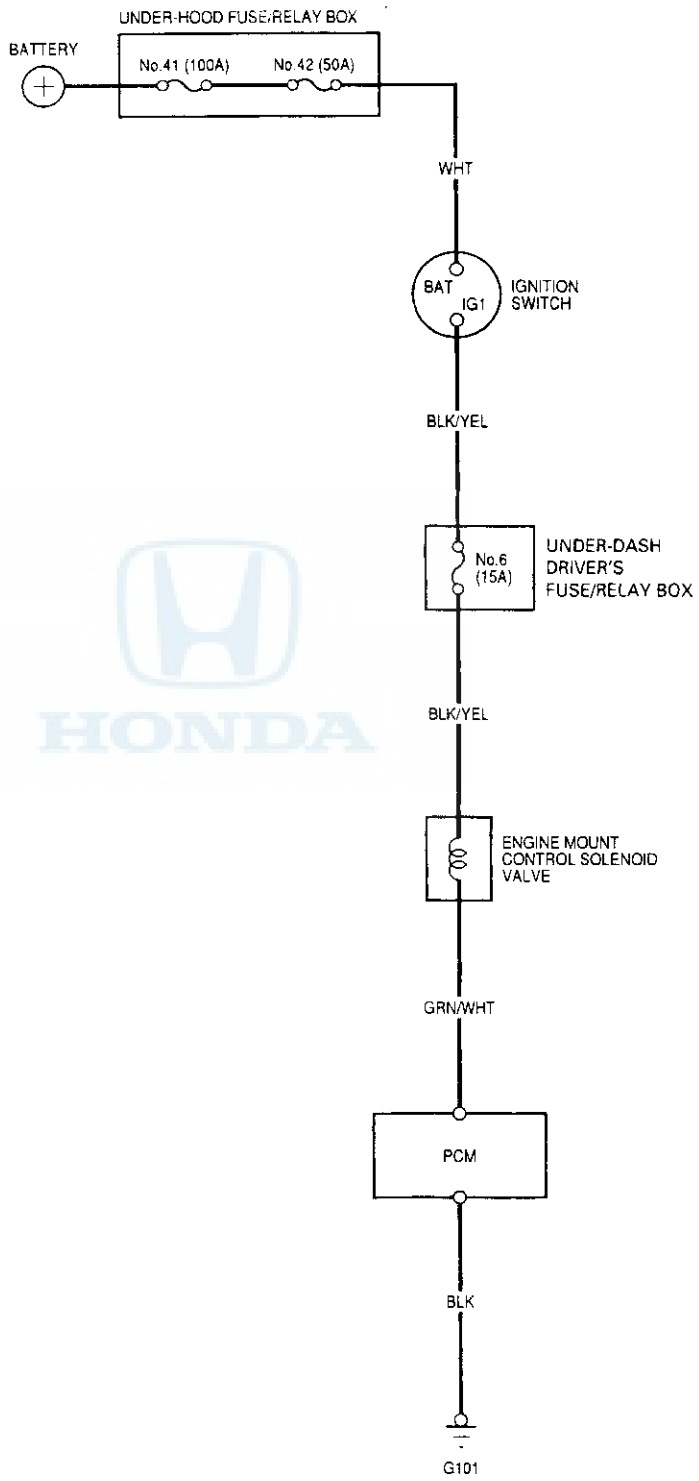

Troubleshooting

Special Tools Required
Vacuum Pump/Gauge, 0 – 30 in.Hg
A973X-041-XXXXX

NOTE: Check the vacuum hoses and lines for damage and proper connections before troubleshooting.

Follow this procedure if the engine vibrates excessively when idling.

1. Warm up the engine to normal operating temperature (the cooling fan comes on 2 times).

   Is the idle speed less than 800 rpm?

   YES – Go to step 2.

   NO – Adjust the idle speed (see page 11-86). ■

2. Fully depress the brake pedal.

3. With the transmission in gear, have an assistant disconnect and reconnect the 2P connector from the engine mount control solenoid valve.

   Is there a noticeable change in idle smoothness when the 2P connector is disconnected?

   YES – Reconnect the 2P connector to the solenoid valve. The engine mount control system is OK. ■

   NO – Go to step 4.

4. Shift to [N] or [P] position.

5. Disconnect the 2P connector from the engine mount control solenoid valve.

6. Measure voltage between the No. 2 terminal and body ground.

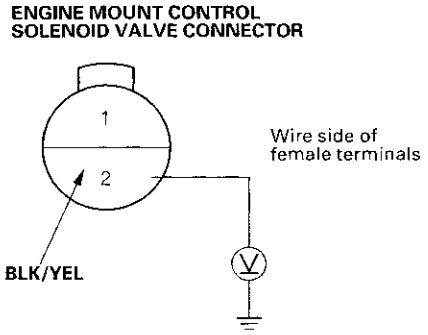

   Is there battery voltage?

   YES – Go to step 7.

   NO – Repair open in BLK/YEL wire between the 2P connector and No. 6 (15A) fuse in the under-dash driver's fuse/relay box. ■

7. Measure voltage between the No. 1 and No. 2 terminals.

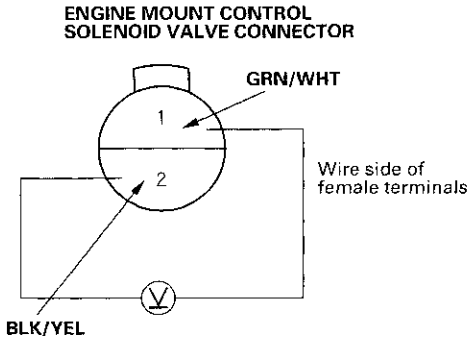

   Is there battery voltage?

   YES – Go to step 8.

   NO – Repair open in GRN/WHT wire between PCM (A2) and the 2P connector. If the wire is OK, substitute a known-good PCM and recheck, refer to '98-01 Accord Service Manual (see page 11-3). ■

(cont'd)

Troubleshooting (cont'd)

8. Raise the engine speed above 1,000 rpm.

9. Measure voltage between the No. 1 and No. 2 terminals.

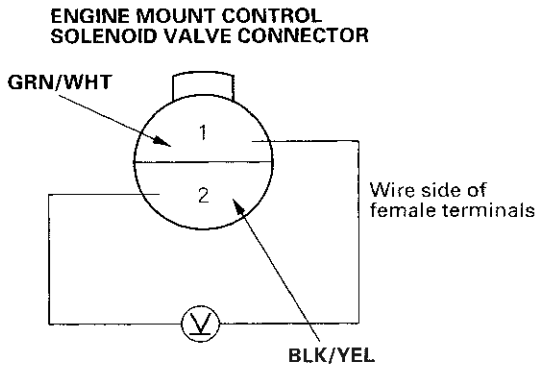

Is there battery voltage?

YES – Repair short to body ground in GRN/WHT wire between PCM (A2) and the 2P connector. If the wire is OK, substitute a known-good PCM and recheck, refer to '98-01 Accord Service Manual (see page 11-3). ■

NO – Go to step 10.

10. Disconnect the upper vacuum hose (A) from the engine mount control solenoid valve (B), and connect a vacuum pump/gauge to the hose. Apply vacuum for 20 seconds.

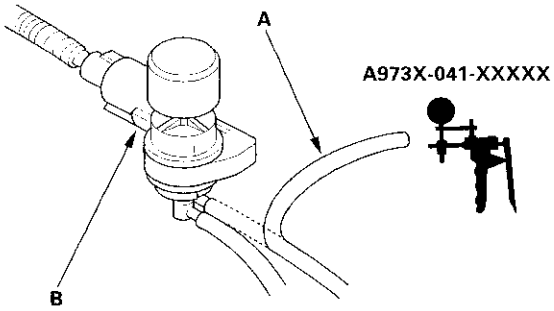

Does the engine mount hold vacuum?

YES – Go to step 11.

NO – Either the vacuum hose or one of the engine mounts has a vacuum leak. Repair as needed. ■

11. Release the vacuum, then apply vacuum again.

Is there a noticeable change in idle smoothness with and without vacuum applied?

YES – Go to step 12.

NO – Isolate and replace the leaking engine mount. ■

12. Disconnect the lower vacuum hose (A) from the engine mount control solenoid valve (B) and connect a vacuum pump/gauge to the hose.

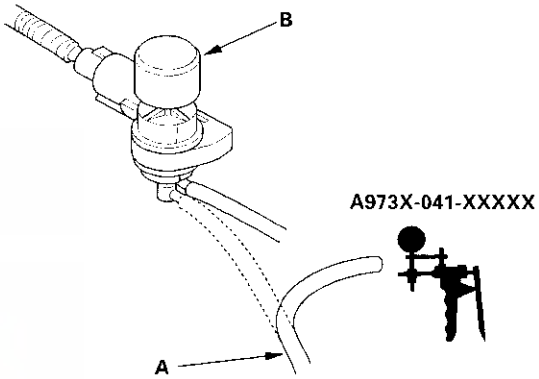

Is there manifold vacuum?

YES – Replace the engine mount control solenoid valve. ■

NO – Repeir as needed. ■

Engine Mechanical

NOTE: Refer to the 1998—2001 Accord Service Manual, P/N 61S8008, for items not shown in this section.

Engine Assembly

Engine Removal

Special Tool Required
Belt Tension Release Arm, YA 9317, commercially available

NOTE:
- Use fender covers to avoid damaging painted surfaces.
- To avoid damage, unplug the wiring connectors carefully while holding the connector portion.
- Mark all wiring and hoses to avoid misconnection. Also, be sure that they do not contact other wiring or hoses, or interfere with other parts.

1. Remove the support struts from the hood, then fix the hood in a vertical position.

2. Make sure you have the anti-theft code for the radio, then write down the frequencies for the radio's preset buttons.

3. Disconnect the battery negative terminal first, then the positive terminal. Remove the battery.

4. Remove the throttle body cover (A) and intake manifold cover (B).

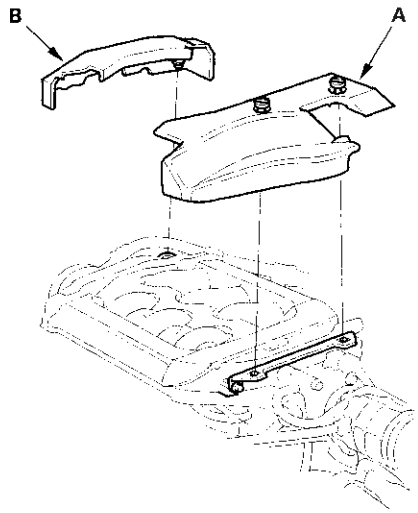

5. Remove the evaporative emission (EVAP) canister hose (A) from the throttle body.

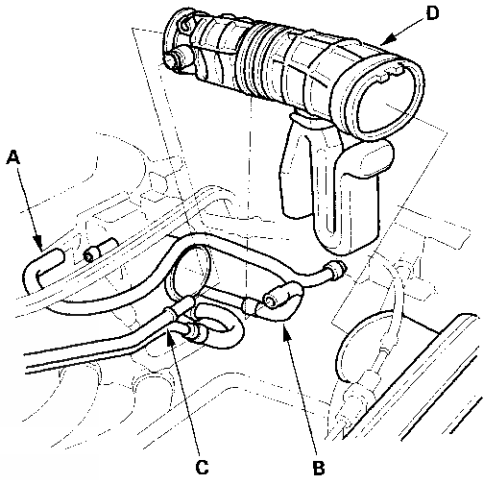

6. Remove the vacuum hose (B) and breather pipe (C), then remove the intake air duct (D).

7. Remove the ground cable (A) and harness clamp (B).

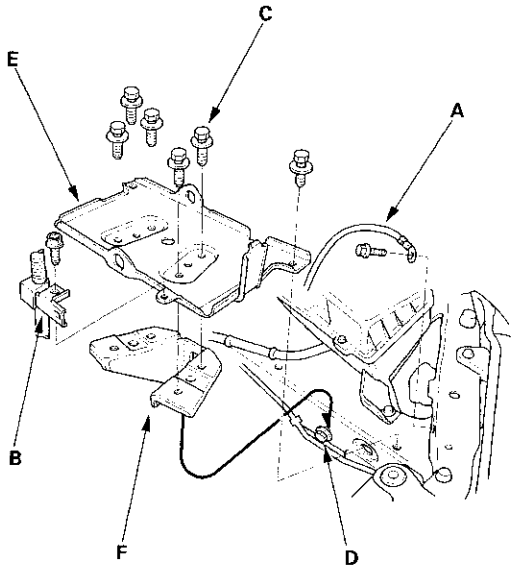

8. Remove 6 mounting bolts (C), and loosen the mounting bolt (D), then remove the battery base (E) and battery base bracket (F).

9. Remove the throttle cable (A) and cruise control cable (B) by loosening the locknuts (C), then slip the cable ends out of the accelerator linkage. Take care not to bend the cables when removing them. Always replace any kinked cable with a new one.

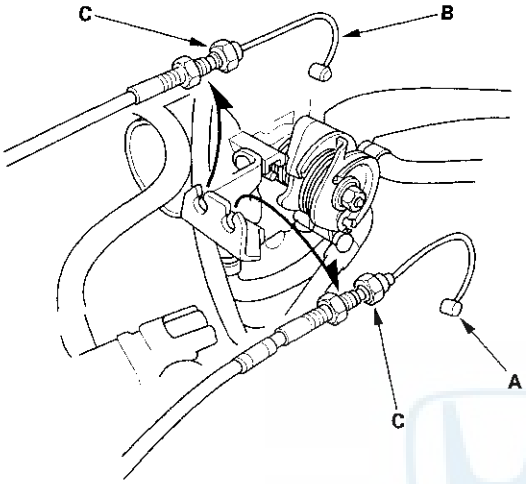

10. Disconnect the engine wire harness connectors on the left side of the engine compartment.

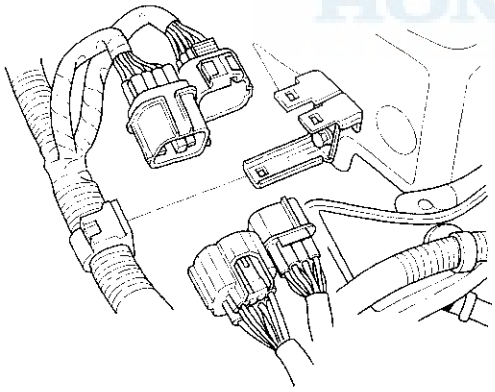

11. Relieve fuel pressure (see page 11-88).

12. Remove the fuel feed hose (A) and fuel return hose (B).

'98-99 models:

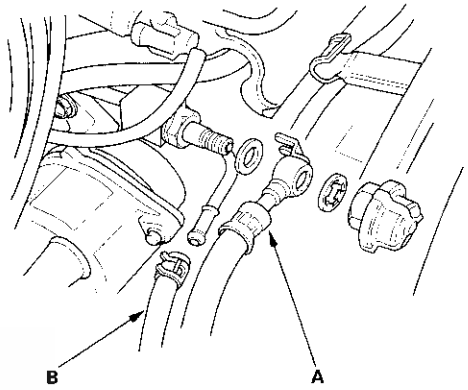

'00-01 models:

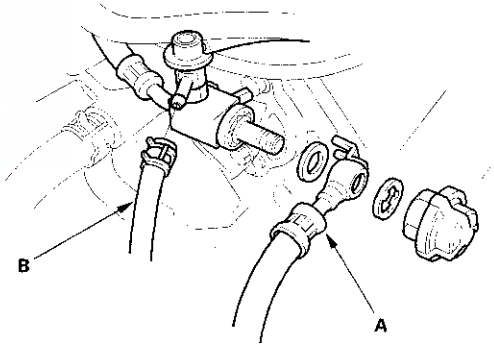

13. Remove the brake booster vacuum hose (A) and the cruise control vacuum hose (B).

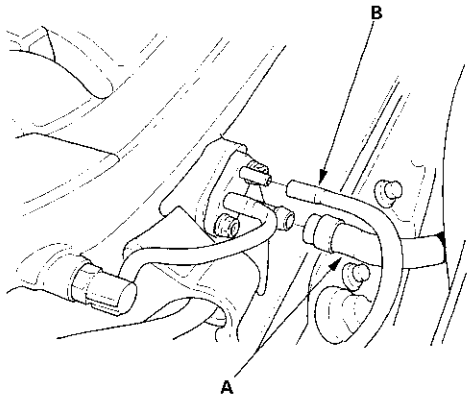

(cont'd)

Engine Removal (cont'd)

14. Remove the engine wire harness clamps.

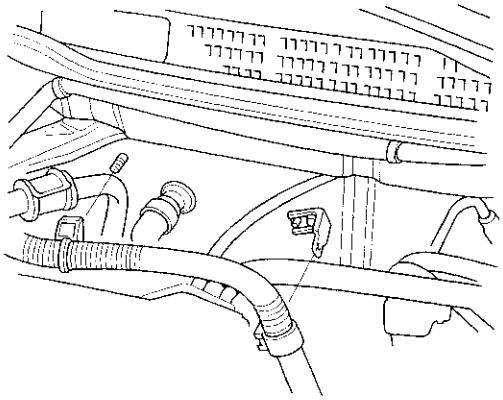

15. Remove the battery cables (A), and disconnect the connector (B) from the under-hood fuse/relay box (C).

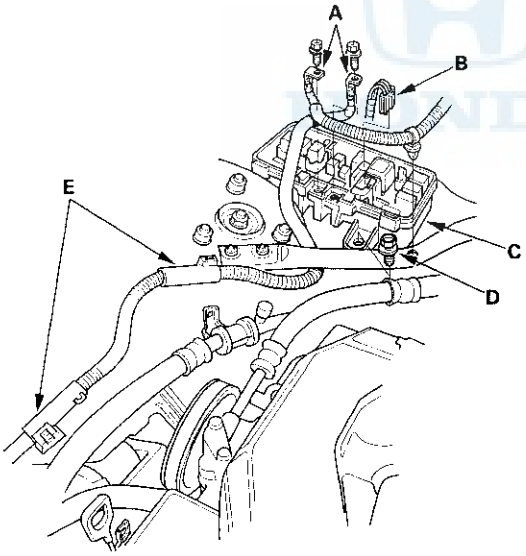

16. Remove the flange bolt (D), then remove the under-hood fuse/relay box.

17. Remove the harness clamps (E).

18. Remove the starter cable clamps.

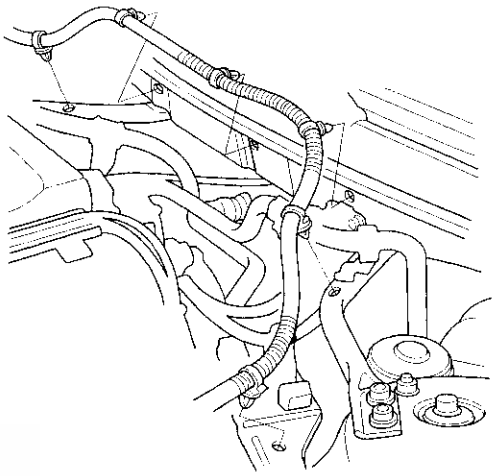

19. Disconnect the connectors from the PCM.

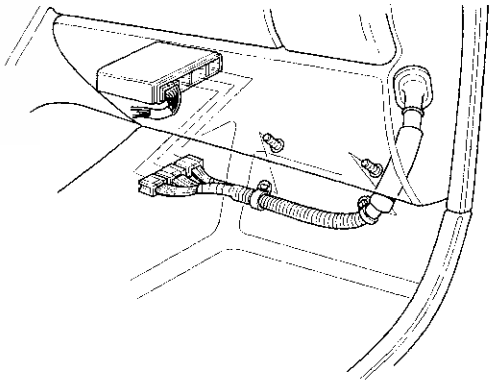

20. Remove the grommet (A), then pull out the PCM connectors.

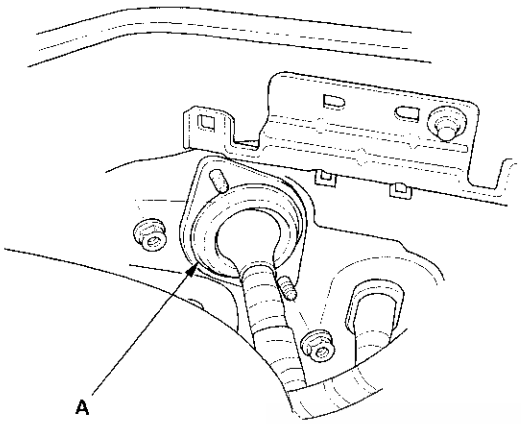

21. Move the auto-tensioner (A) with the belt tension release arm (B) to remove tension from the alternator belt (C), then remove the alternator belt.

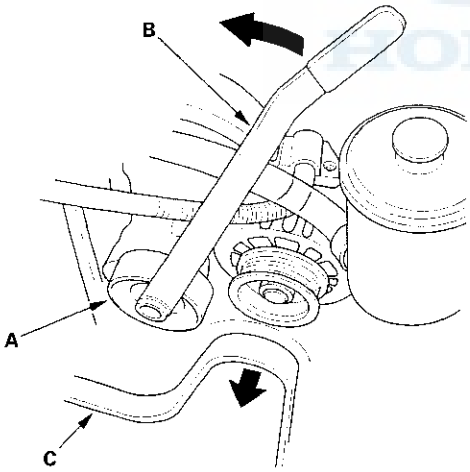

22. Loosen the adjusting nut (A), and remove the locknut (B) and mounting bolt (C), then remove the power steering (P/S) pump belt (D) and pump without disconnecting the P/S hoses.

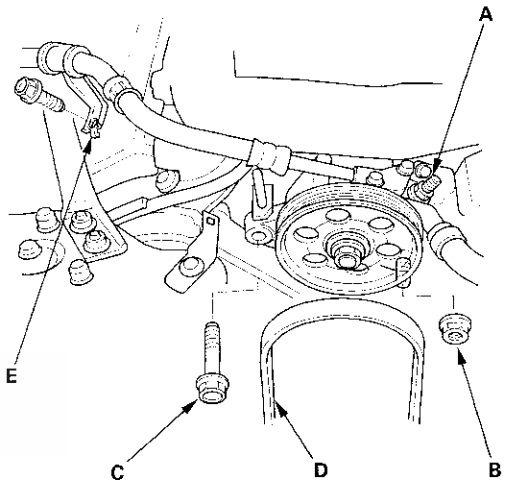

23. Remove the P/S hose clamp (E).

24. Remove the radiator cap.

25. Make sure the hoist brackets are positioned properly. Raise the hoist to full height.

26. Remove the front tires/wheels.

27. Remove the splash shield.

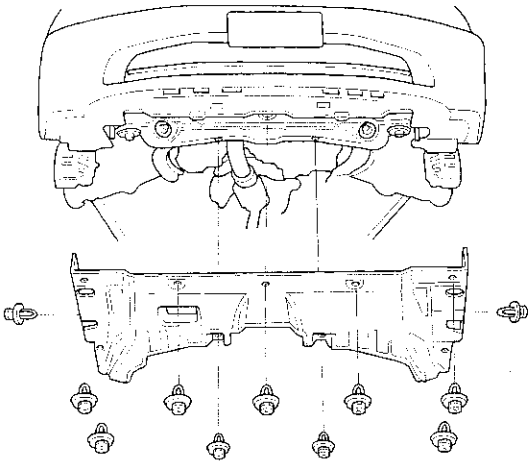

(cont'd)

Engine Removal (cont'd)

28. Loosen the drain plug in the radiator, drain the engine coolant (see page 10-10).

29. Drain the automatic transmission fluid (ATF). Reinstall the drain plug using a new washer (see page 14-112).

30. Drain the engine oil. Reinstall the drain bolt using a new washer (see page 8-5).

31. Disconnect the heated oxygen sensor (HO2S) connector (A), then remove exhaust pipe A (B).

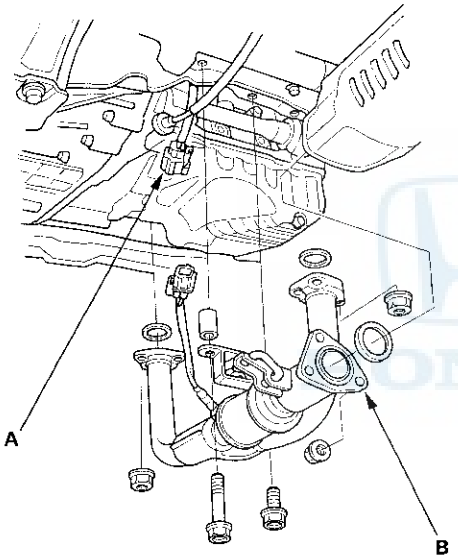

32. Remove the damper fork, refer to the '98-01 Accord Service Manual (see page 18-17).

33. Disconnect the suspension lower arm ball joints; refer to the '98-01 Accord Service Manual (see page 18-17).

34. Remove the driveshafts; refer to the '98-01 Accord Service Manual (see page 16-3). Coat all precision-finished surfaces with clean engine oil. Tie plastic bags over the driveshaft ends.

35. Remove the bolts (A) securing the shift cable holder (B), then remove the shift cable cover (C). To prevent damage to the control lever joint, be sure to remove the bolts securing the shift cable holder before removing the bolts securing the shift cable cover.

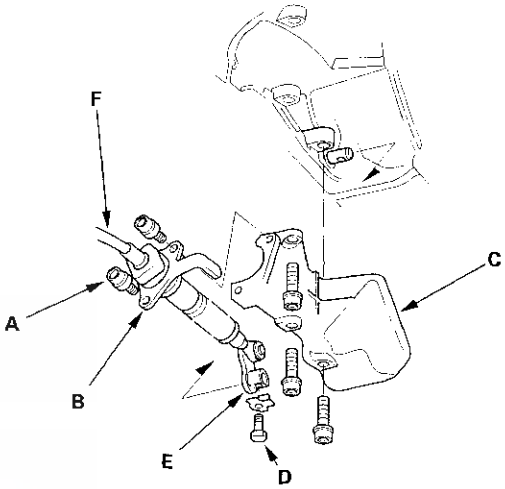

36. Remove the lock bolt (D) securing the control lever (E), then remove the shift cable (F) with the control lever. Take care not to bend the shift cable while removing it.

37. Unplug the P/S hose clamps (A), and disconnect the engine mount control vacuum hose (B).

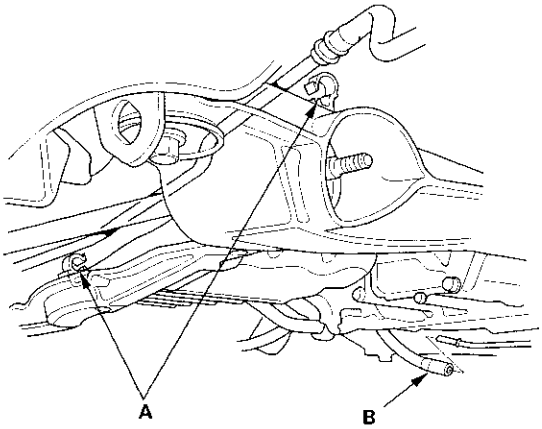

38. Lower the hoist, then remove the upper radiator hose (A), and the lower radiator hose (B).

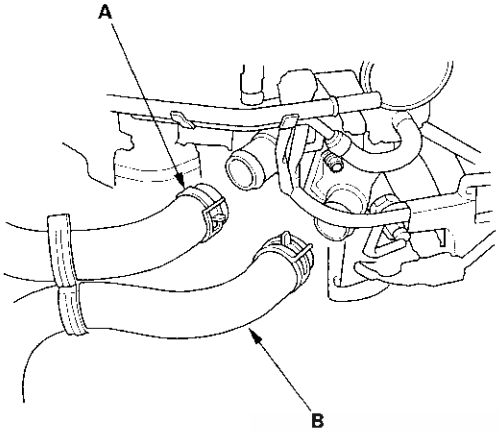

39. Remove the distributor cap, then remove the heater hoses.

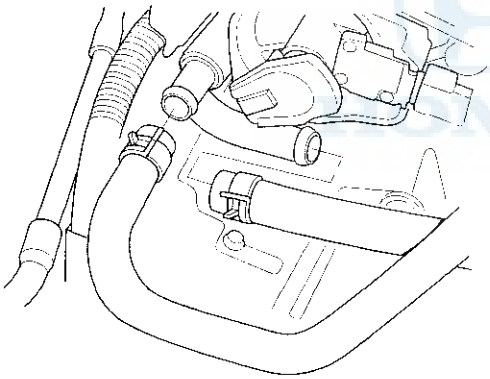

40. Remove the ATF cooler hoses, then plug the ATF cooler hoses and lines.

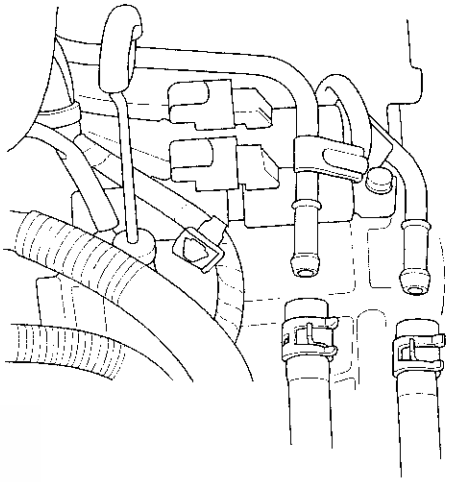

(cont'd)

Engine Removal (cont'd)

41. Attach the chain hoist to the engine as shown.

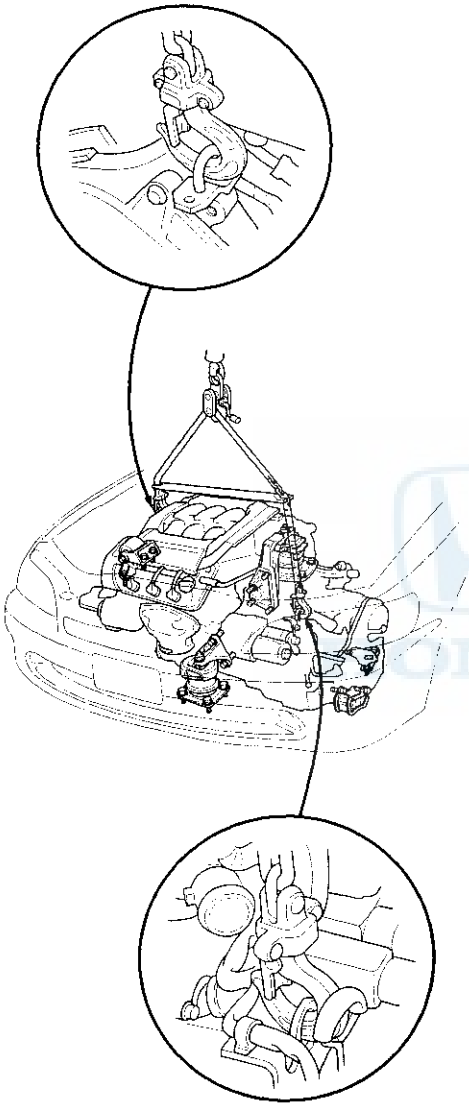

42. Remove the side engine mount bracket.

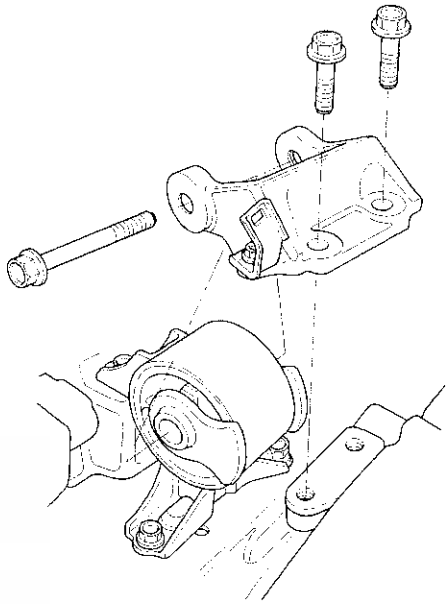

43. Remove the rear mount bracket support nut (A) and mounting bolt (B).

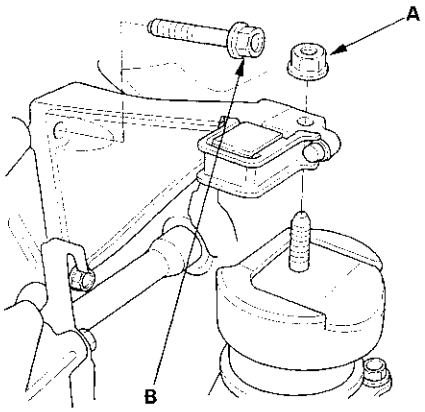

44. Remove the front mount bracket support nut.

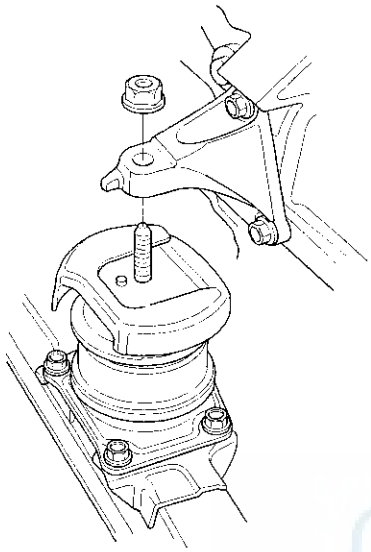

45. Make sure the hoist brackets are positioned properly. Raise the hoist to full height.

46. Remove the flange bolts securing the radius rods.

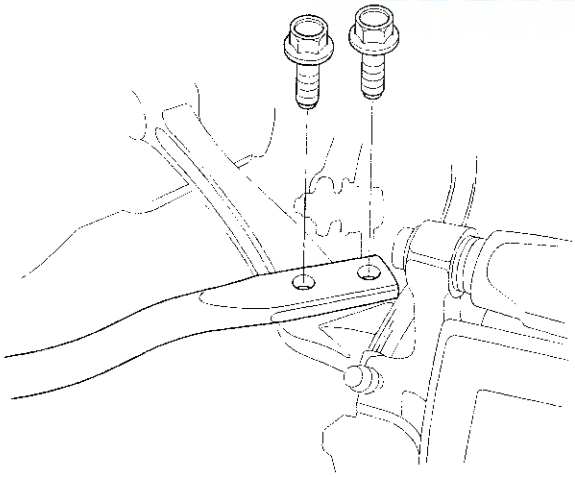

47. Make a mark (A) on the front beam (B) and rear beam (C), then remove the front beam.

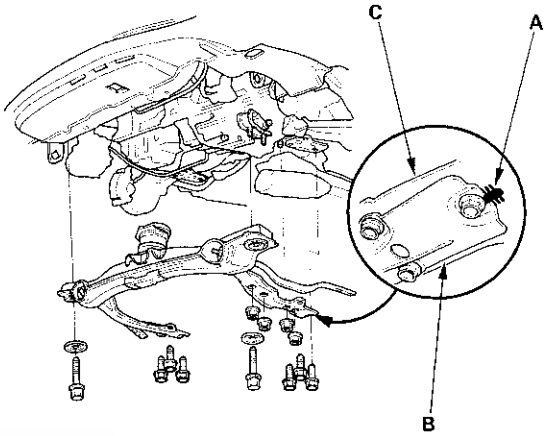

48. Remove the A/C compressor without disconnecting the A/C hoses.

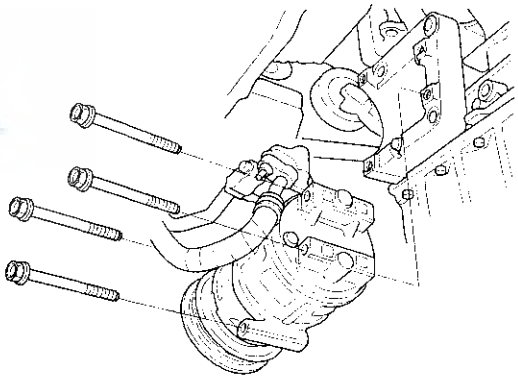

(cont'd)

Engine Removal (cont'd)

49. Remove the rear mount.

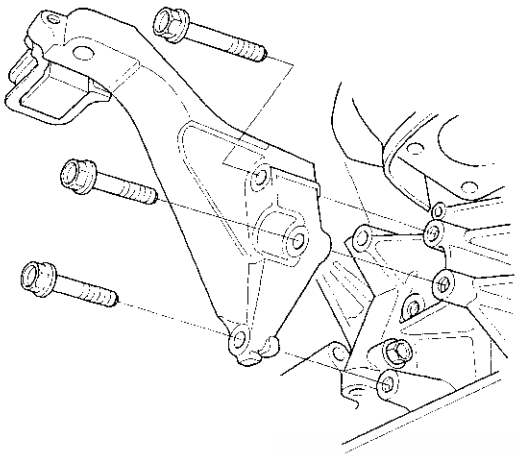

50. Remove the transmission lower rear mount.

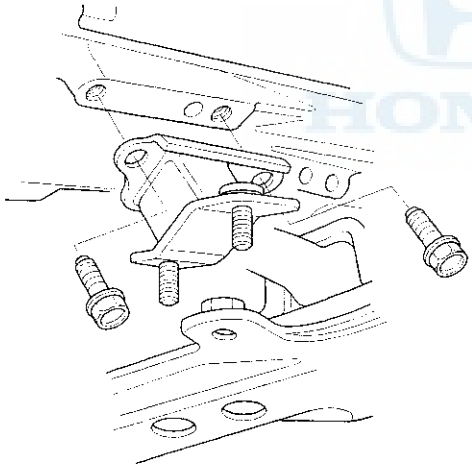

51. Check that the engine/transmission is completely free of vacuum hoses, fuel and coolant hoses and electrical wiring.

52. Slowly lower the engine approximately 150 mm (6 in.). Check once again that all hoses and wires are disconnected from the engine/transmission.

53. Lower the engine all the way, and disconnect the chain hoist from the engine.

54. Remove the engine from under the vehicle.

Engine Installation

1. Install the accessory brackets and tighten their bolts and nuts to the specified torques.

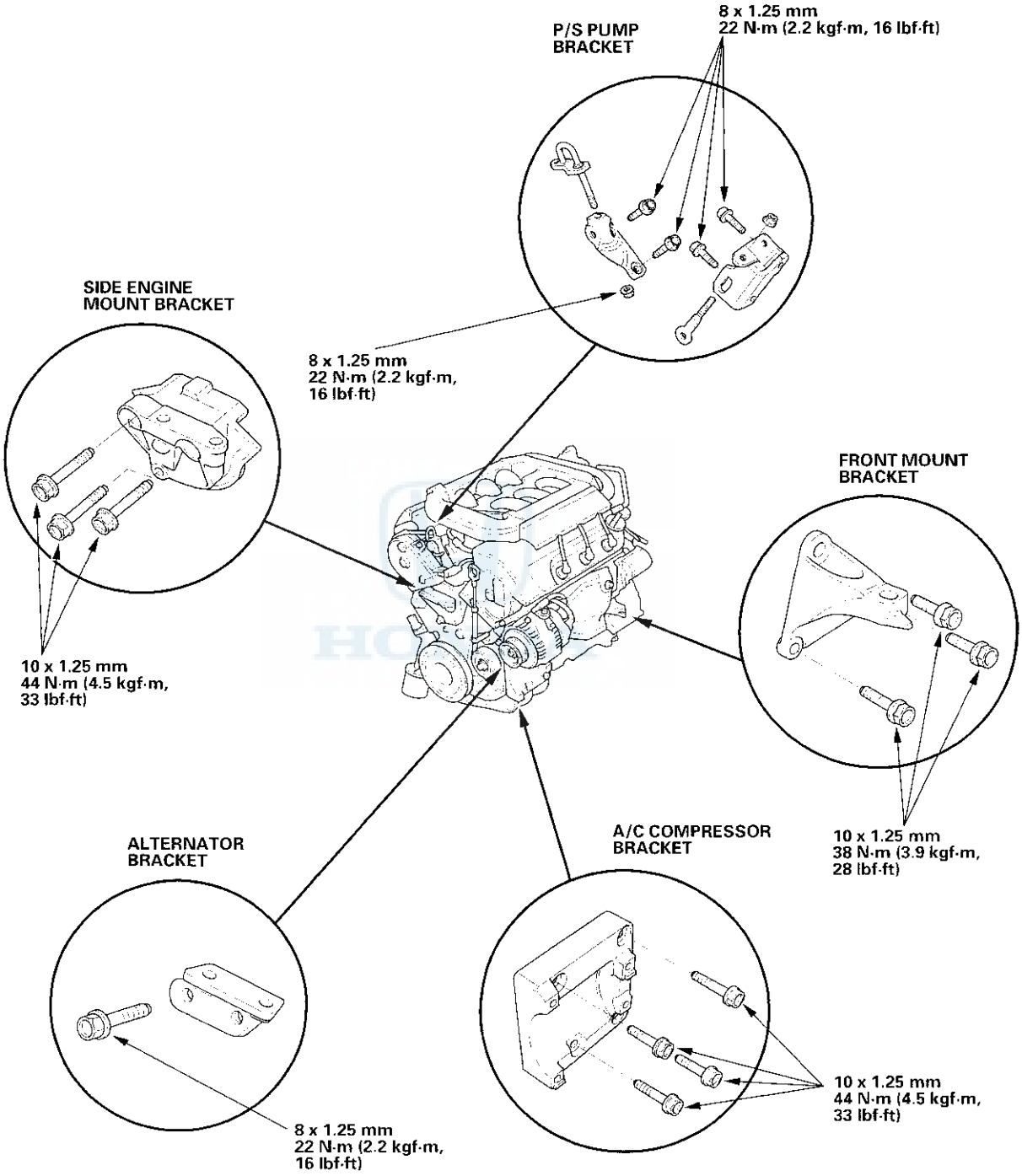

(cont'd)

Engine Installation (cont'd)

2. Position the engine under the vehicle. Attach the chain hoist to the engine, then lift the engine into position in the vehicle.

   NOTICE
   Reinstall the mounting bolts/nuts in the sequence given. Failure to follow this sequence may cause excessive noise and vibration, and reduce bushing life.

3. Install the transmission lower rear mount.

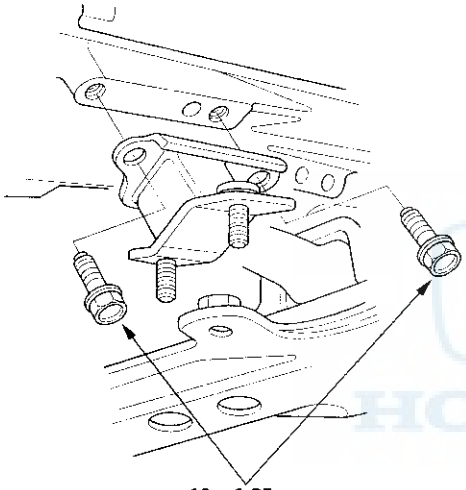

4. Install the rear mount bracket.

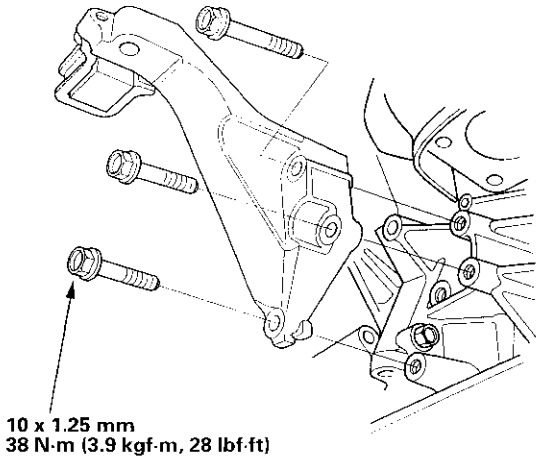

5. Install the A/C compressor.

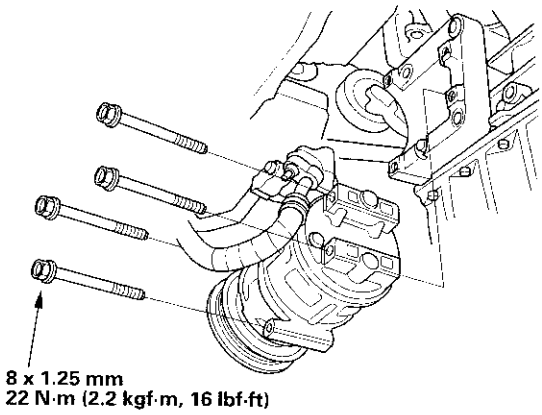

6. Install the front beam. Align mark (A) on the rear beam (B) and front beam (C), then tighten the bolts (D).

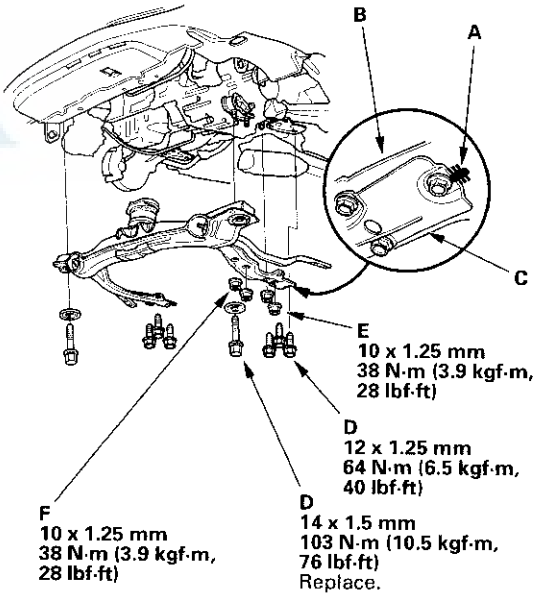

7. Tighten the transmission lower rear mount mounting nuts (E) and transmission lower front mount mounting nuts (F).

8. Tighten the flange bolts on the radius rods.

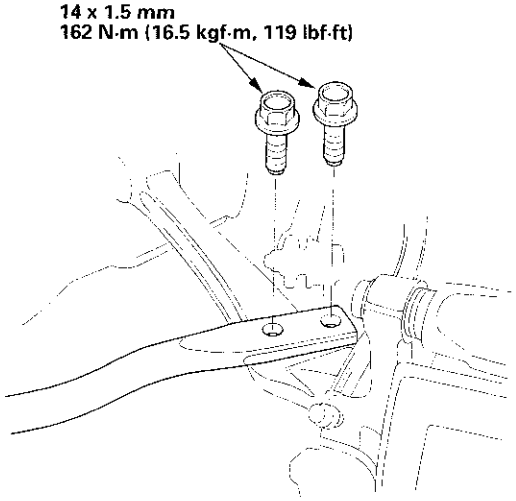

9. Lower the hoist.

10. Tighten the front mount bracket support nut.

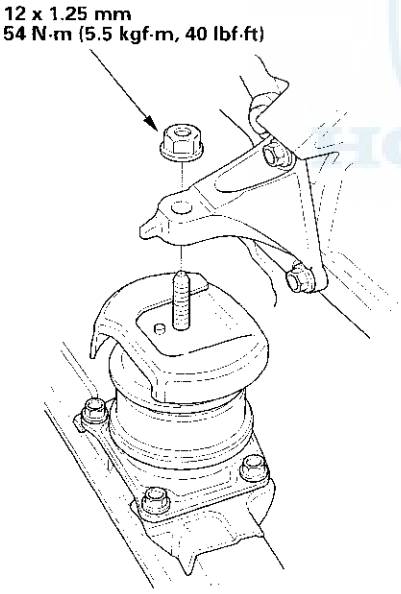

11. Tighten the rear mount bracket support nut and mounting bolt.

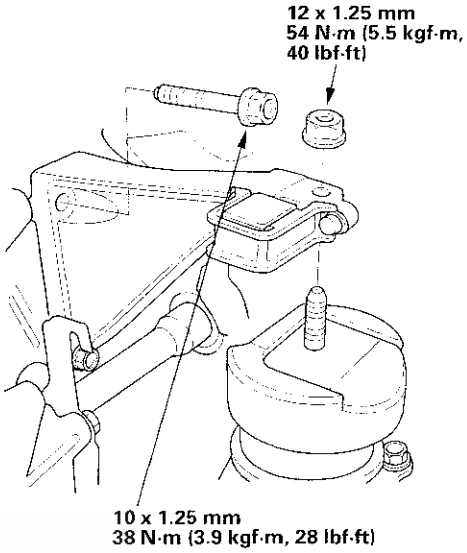

12. Install the side engine mount bracket, then tighten the mounting bolts in the numbered sequence shown.

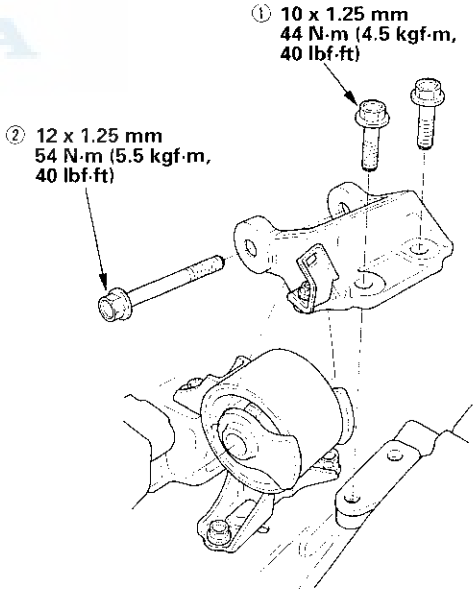

13. Remove the chain hoist from the engine.

(cont'd)

Engine Installation (cont'd)

14. Raise the hoist to full height.

15. Install a new spring clip on the end of each driveshaft, then install the driveshafts. Make sure each clip "clicks" into place in the differential and intermediate shaft.

16. Connect the suspension lower arm ball joints. Use new cotter pins; refer to the '98-01 Accord Service Manual (see page 18-17).

17. Install the damper fork; refer to the '98-01 Accord Service Manual (see page 18-17).

18. Install exhaust pipe A (A); use a new gaskets (B) and new self locking nuts (C).

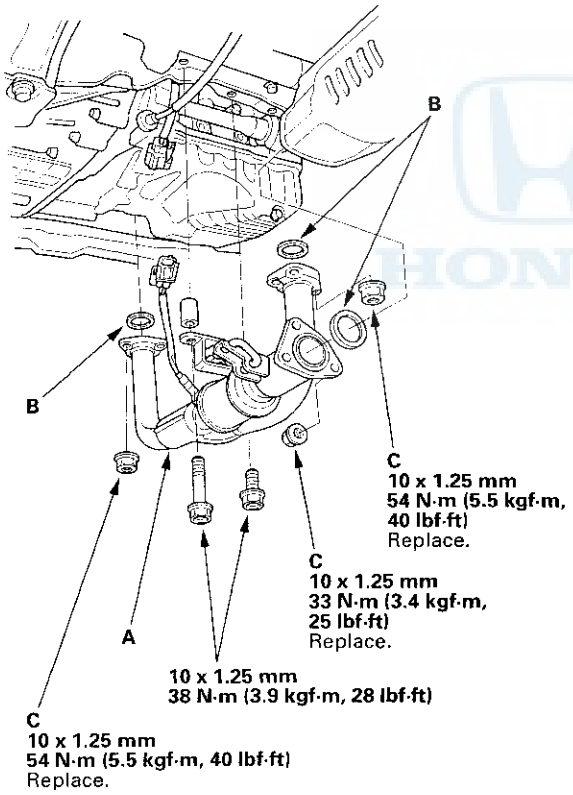

19. Install the control lever (A) with the shift cable on the control shaft. Do not bend the shift cable any more than is necessary to install the control lever.

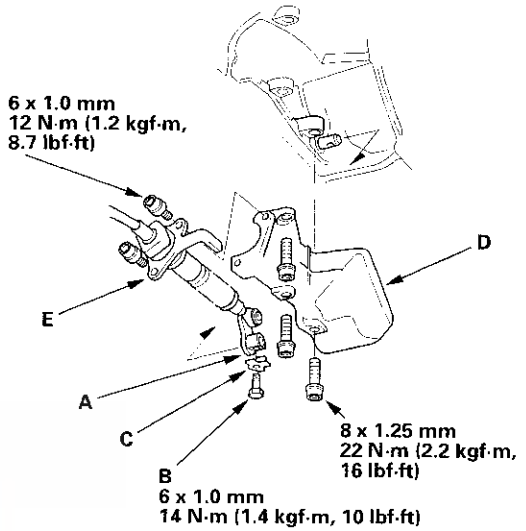

20. Install the lock bolt (B) with a new lock washer (C), then bend the lock tab of the lock washer.

21. Install the shift cable cover (D), then install the shift cable holder (E) on the shift cable cover.

22. Install the P/S hose into the clamps (A), and connect the engine mount control vacuum hose (B).

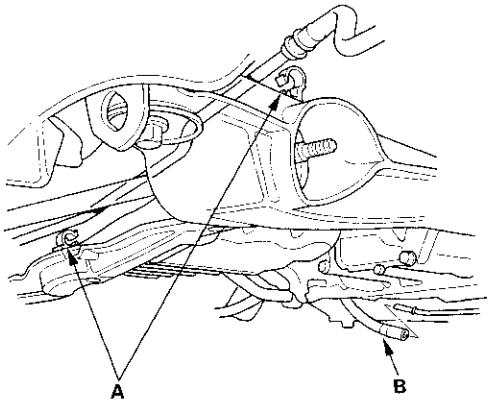

23. Connect the upper radiator hose (A), and the lower radiator hose (B).

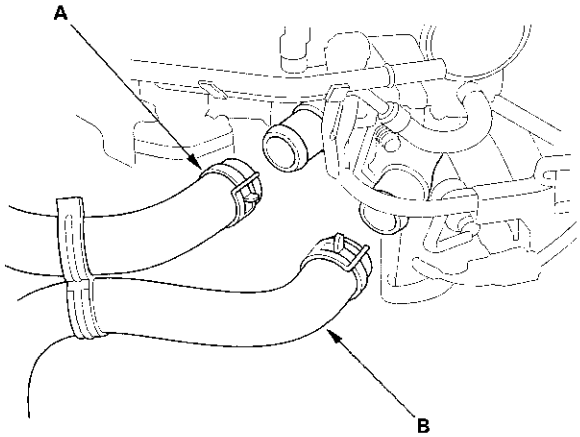

24. Install the heater hoses, then install the distributor cap.

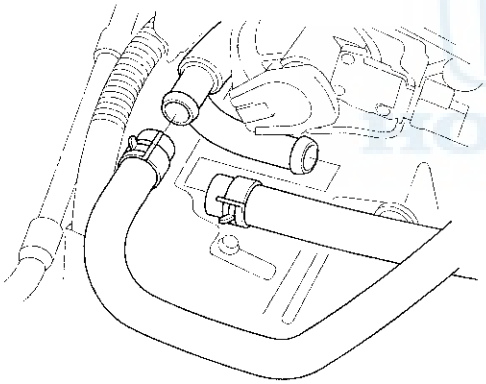

25. Connect the ATF cooler hoses.

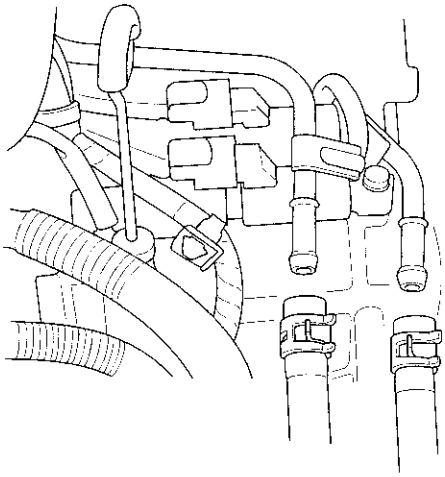

26. Install the splash shield.

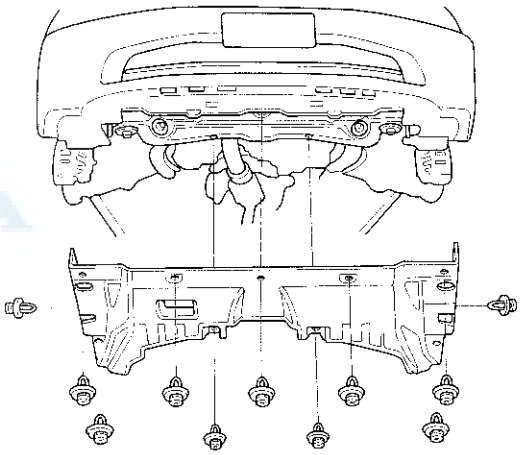

(cont'd)

Engine Installation (cont'd)

27. Install the front tires/wheels.
28. Lower the hoist.
29. Install the alternator belt.
30. Loosely install the P/S pump belt and pump.
31. Adjust the P/S pump belt (see page 17-13).
32. Push in the PCM connectors, through the bulkhead then install the grommet (A).

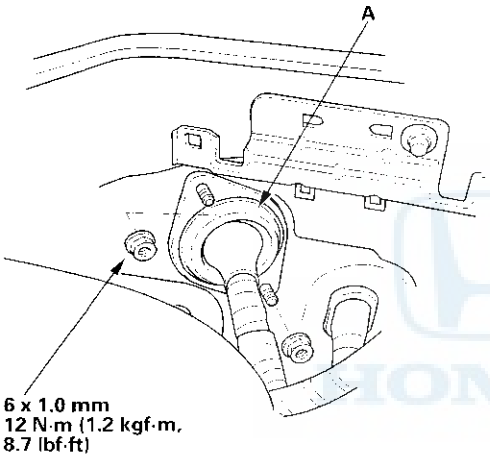

33. Connect the PCM connectors.

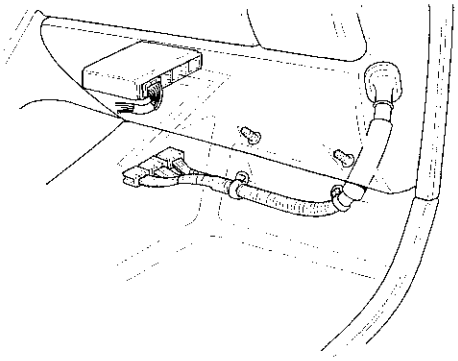

34. Install the starter cable clamps.

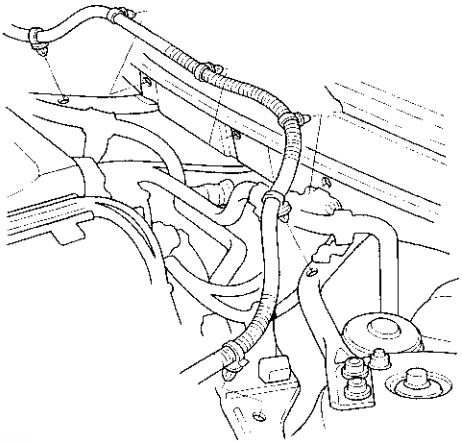

35. Install the under-hood fuse/relay box (A) and harness clamps (B).

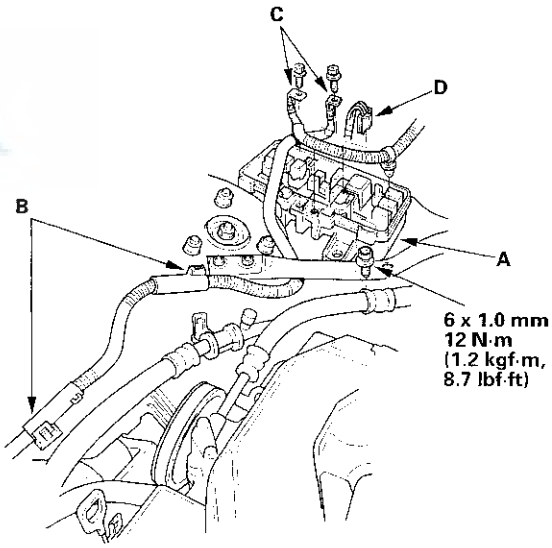

36. Install the battery cables (C), and connect the connector (D) from the under-hood fuse/relay box (A).

37. Install the engine wire harness clamps.

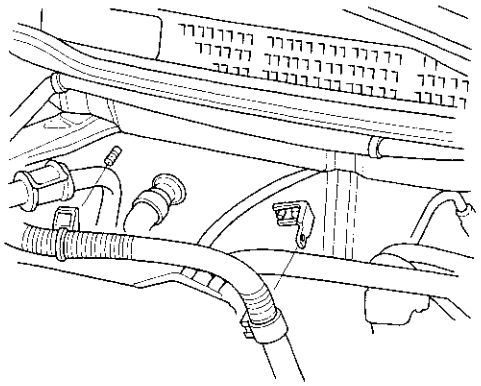

38. Install the brake booster vacuum hose (A) and the cruise control vacuum hose (B).

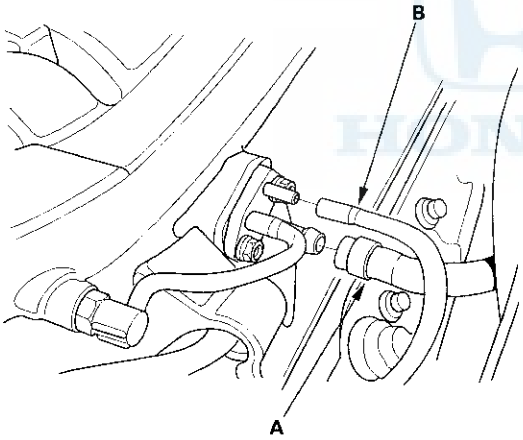

39. Install the fuel hose (A) and fuel return hose (B), using new washers (C).

'98-99 models:

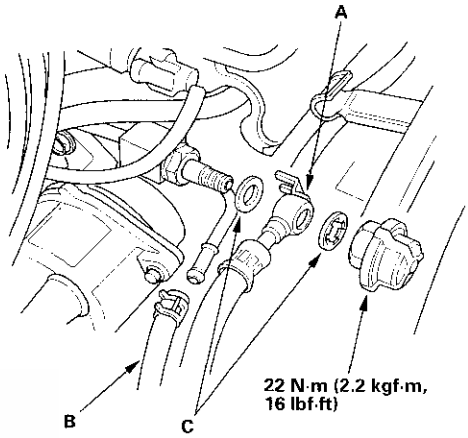

'00-01 models:

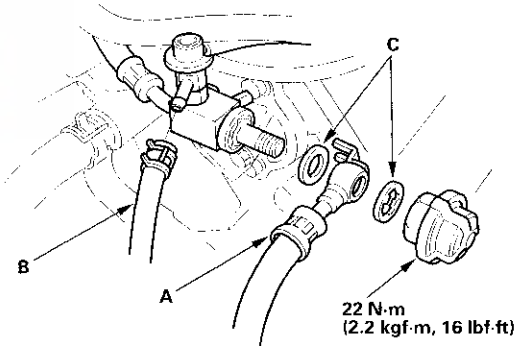

40. Connect the engine wire harness connectors on the left side of the engine compartment.

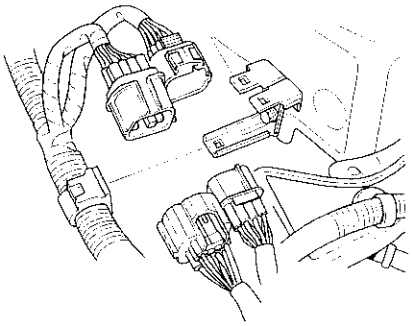

(cont'd)

Engine Installation (cont'd)

41. Install the cruise control cable, then adjust the cable (see page 4-54).

42. Install the throttle cable, then adjust the cable (see page 11-98).

43. Install the battery base bracket (A), battery base (B), then install the ground cable (C) and harness clamp (D).

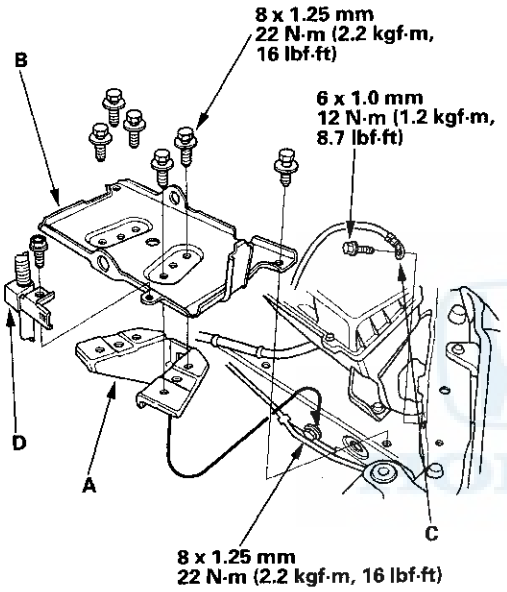

44. Install the throttle body cover (A) and intake manifold cover (B).

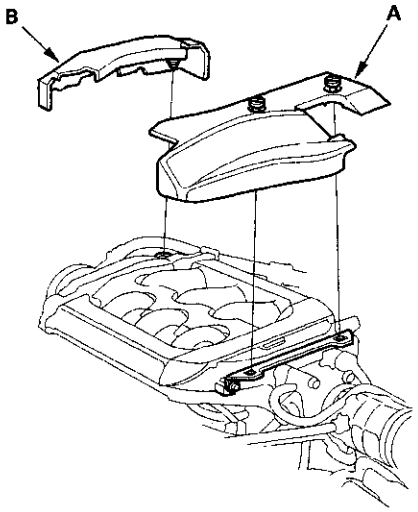

45. Install the intake air duct (A), then install the vacuum hose (B) and breather pipe (C).

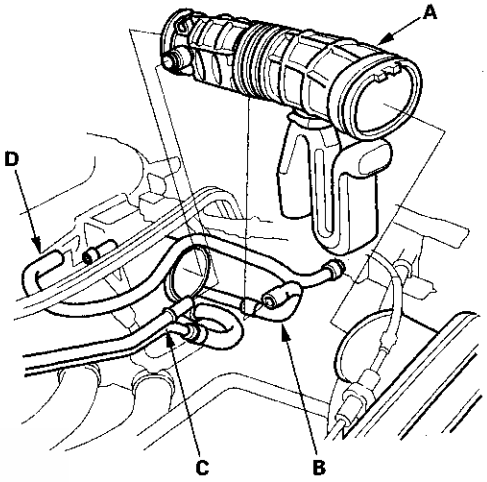

46. Install the EVAP canister hose (D) to the throttle body.

47. Install the battery. Clean the battery posts and cable terminals with sandpaper, then assemble them and apply grease to prevent corrosion.

48. Refill the engine with engine oil (see page 8-5).

49. Refill the transmission with automatic transmission fluid (ATF) (see page 14-113).

50. Refill the radiator with engine coolant, and bleed air from the cooling system with the heater valve open (see page 10-10).

51. Move the shift lever to each gear, and verify that the A/T gear position indicator follows the transmission range switch.

52. Inspect for fuel leaks. Turn on (II) the ignition switch (do not operate the starter) so that the fuel pump runs for approximately 2 seconds and pressurizes the fuel line. Repeat this operation 2 or 3 times, then check for fuel leakage at any point in the fuel line.

53. Enter the anti-theft code for the radio, then enter the customer's radio station presets.

Engine Mechanical

Cylinder Head

Special Tools

Ref. No.	Tool Number	Description	Qty
①	07HAH-PJ7010B	Valve Guide Reamer, 5.5 mm	1
②	07JAA-001020A	Socket, 19 mm	1
③	07JAB-001020A	Holder Handle	1
④	07MAB-PY30100	Pulley Holder Attachment, 50 mm Offset	1
⑤	07NAJ-P07010A	Pressure Gauge Adapter	1
⑥	07VAJ-P8A010A	VTEC Air Adapter	1
⑦	07VAJ-P8A020A	VTEC Air Stopper	1
⑧-1	07406-0070300	A/T Low Pressure Gauge W/Panel	1
⑧-2	07MAJ-PY4011A	A/T Pressure Hose, 2,210 mm	1
⑧-3	07MAJ-PY40120	A/T Pressure Hose Adapter	1
⑨	07742-0010100	Valve Guide Driver, 5.5 mm	1
⑩	07757-PJ1010A	Valve Spring Compressor Attachment	1

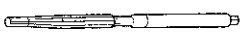

①

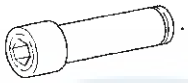

②

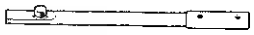

③

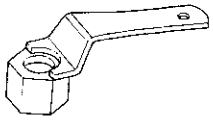

④

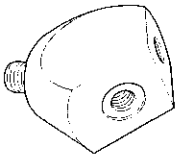

⑤

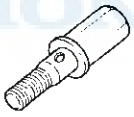

⑥

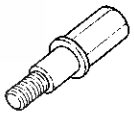

⑦

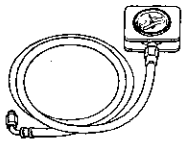

⑧-1, ⑧-2, ⑧-3

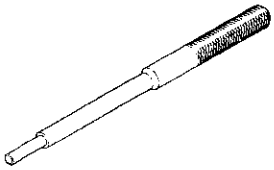

⑨

⑩

Component Location Index

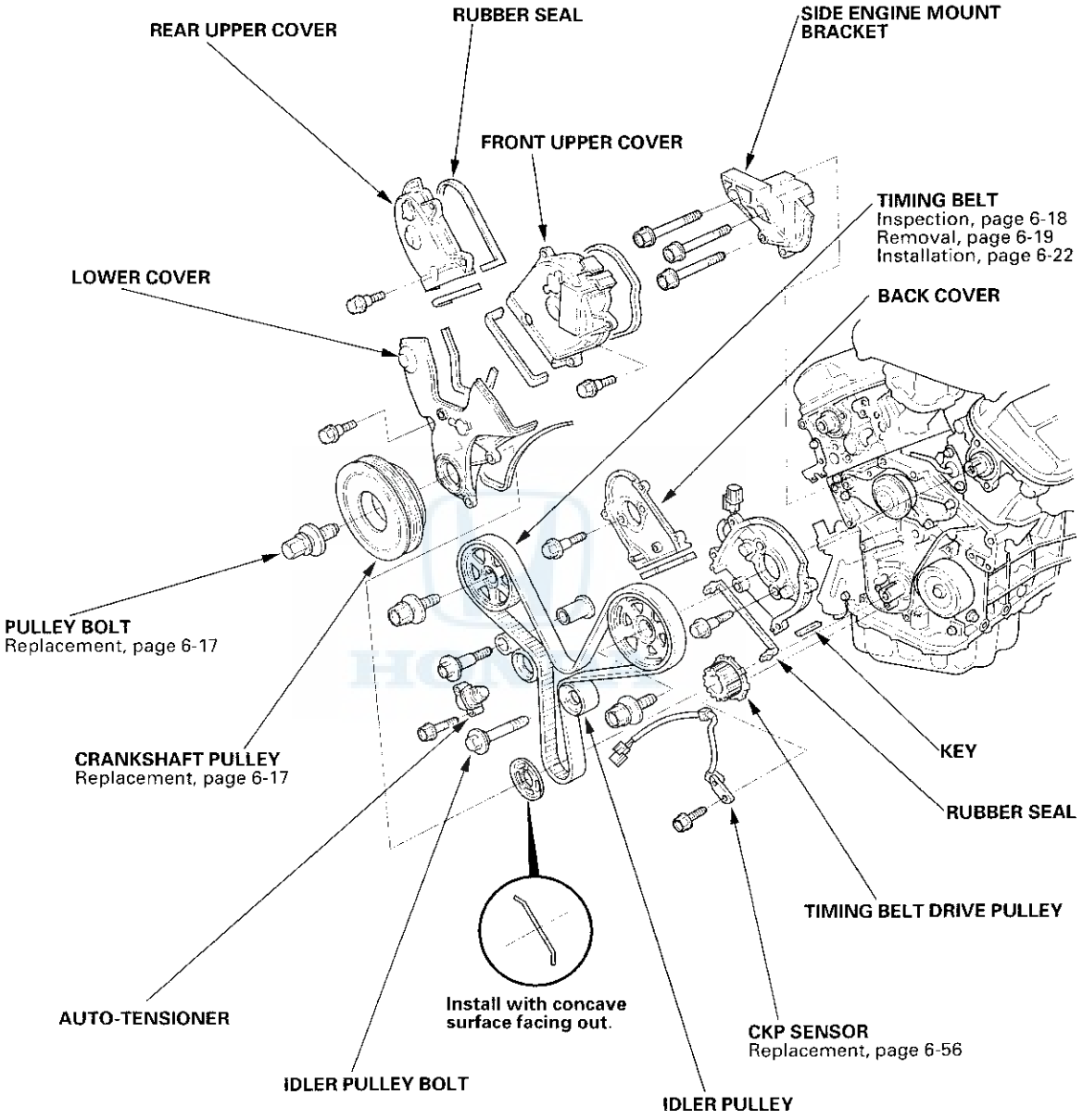

(cont'd)

Component Location Index (cont'd)

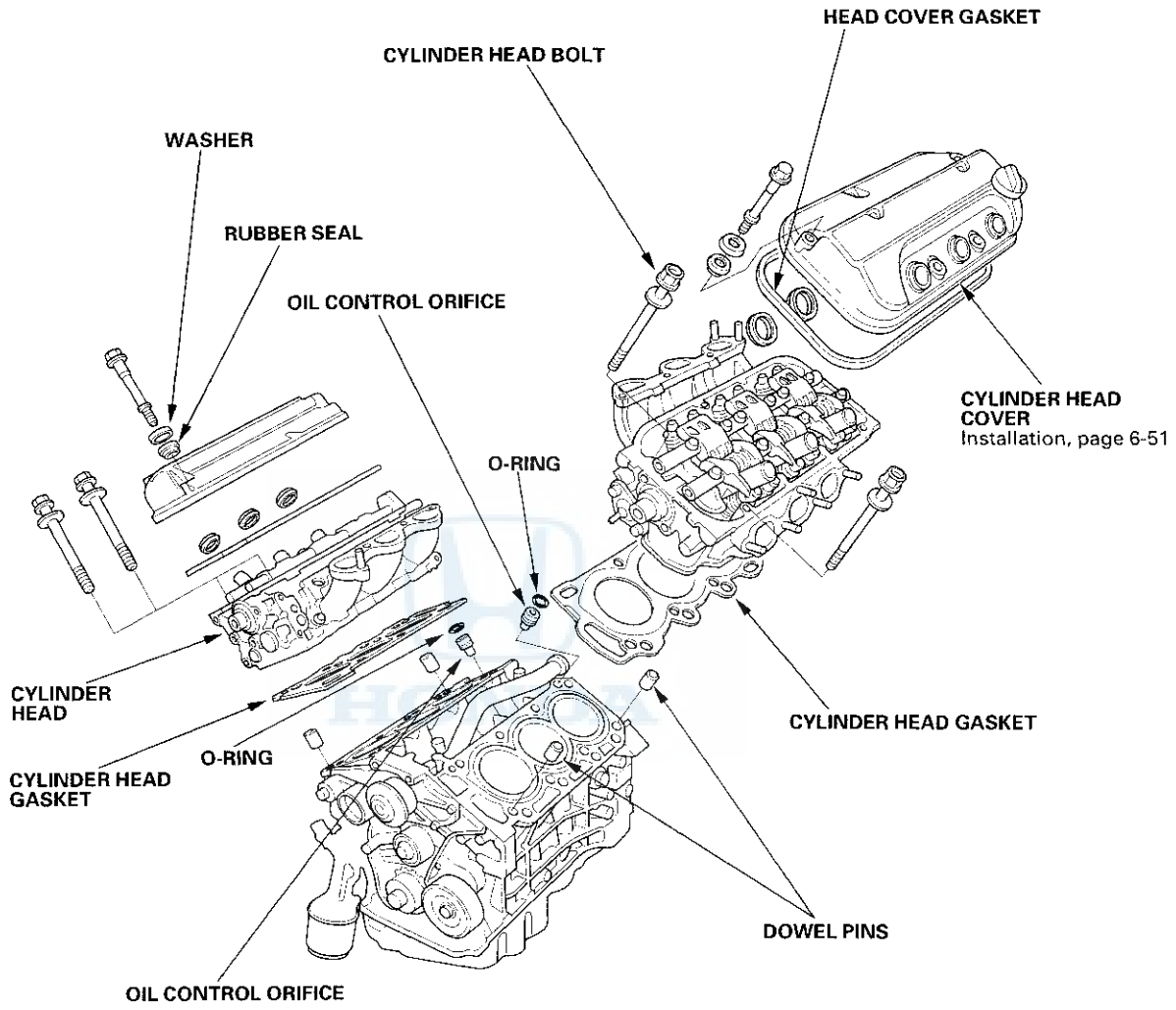

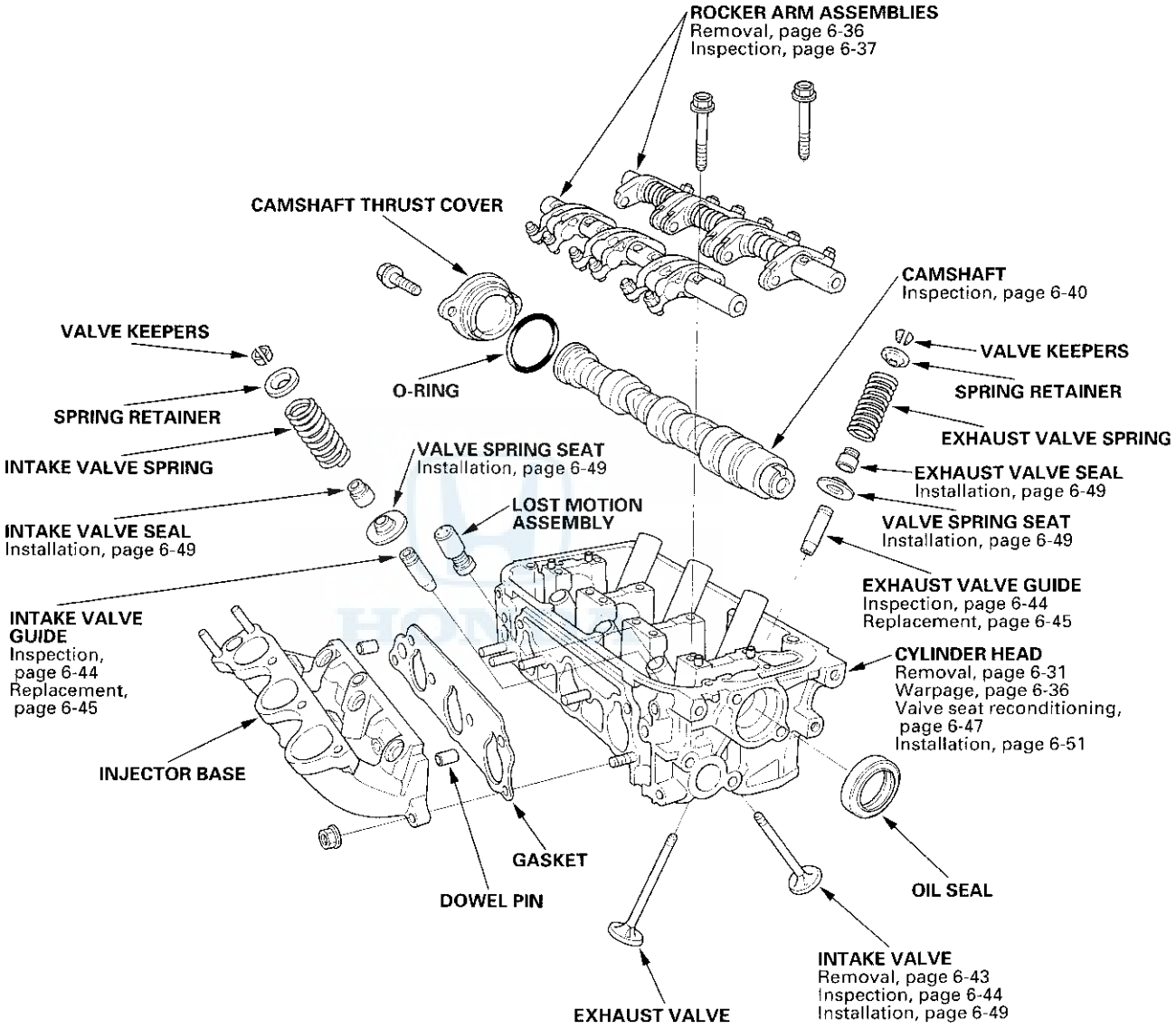
ROCKER ARM ASSEMBLIES
Removal, page 6-36
Inspection, page 6-37
CAMSHAFT THRUST COVER
CAMSHAFT
Inspection, page 6-40
VALVE KEEPERS
VALVE KEEPERS
O-RING
SPRING RETAINER
SPRING RETAINER
EXHAUST VALVE SPRING
INTAKE VALVE SPRING
VALVE SPRING SEAT
Installation, page 6-49
EXHAUST VALVE SEAL
Installation, page 6-49
LOST MOTION
ASSEMBLY
INTAKE VALVE SEAL
Installation, page 6-49
VALVE SPRING SEAT
Installation, page 6-49
EXHAUST VALVE GUIDE
Inspection, page 6-44
Replacement, page 6-45
INTAKE VALVE
GUIDE
Inspection,
page 6-44
Replacement,
page 6-45
CYLINDER HEAD
Removal, page 6-31
Warpage, page 6-36
Valve seat reconditioning,
page 6-47
Installation, page 6-51
INJECTOR BASE
GASKET
DOWEL PIN
OIL SEAL
INTAKE VALVE
Removal, page 6-43
Inspection, page 6-44
Installation, page 6-49
EXHAUST VALVE

DTC Troubleshooting

DTC P1259: A problem in the VTEC Oil Pressure Switch circuit or VTEC Solenoid Valve circuit

Special Tools Required
- Pressure Gauge Adaptor 07NAJ-P07010A
- A/T Low Pressure Gauge W/Panel 07406-0070300
- A/T Pressure Hose, 2,210 mm 07MAJ-PY4011A
- A/T Pressure Adaptor 07MAJ-PY40120

1. Do the powertrain control module (PCM) reset procedure; refer to the '98-01 Accord Service Manual (see page 11-3).

2. Start the engine.

3. Warm up the engine to normal operating temperature (cooling fan comes on).

4. Road test the vehicle:
   Accelerate in [2] position to an engine speed over 4,000 rpm. Hold that engine speed for at least 2 seconds. If DTC P1259 is not repeated during the 1st road test, repeat this test 2 more times.

   Is DTC P1259 indicated?

   YES—Go to step 5.

   NO—Intermittent failure, system is OK at this time. Check for poor connections or loose wires at the VTEC solenoid valve and PCM.■

5. Turn the ignition switch OFF.

6. Disconnect the VTEC oil pressure switch connector.

7. Check for continuity on the VTEC oil pressure switch between the pressure switch connector terminals No. 1 and No. 2.

VTEC OIL PRESSURE SWITCH CONNECTOR

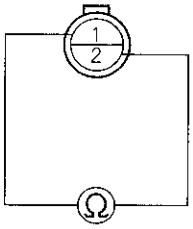

Terminal side of male terminals

Is there continuity?

YES—Go to step 8.

NO—Replace the VTEC oil pressure switch.■

8. Turn the ignition switch ON (II).

9. Measure the voltage between the VTEC oil pressure switch harness connector No. 1 terminal and body ground.

VTEC OIL PRESSURE SWITCH HARNESS CONNECTOR

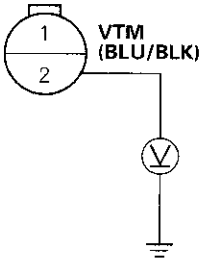

Wire side of female terminals

Is there approx. 12 V?

YES—Go to step 10.

NO—Inspect for an open or short to ground in the wire between the VTEC oil pressure switch and the PCM (C10). If the wire is OK, substitute a known-good PCM and recheck.■

10. Measure voltage across the VTEC oil pressure switch harness 2P connector.

VTEC OIL PRESSURE SWITCH HARNESS 2P CONNECTOR

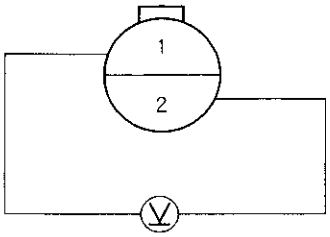

Wire side of female terminals

Is there battery voltage?

YES—Go to step 11.

NO—Repair open in the wire between the VTEC oil pressure switch and G101. If the wire is OK, substitute a known-good PCM and recheck.■

11. Turn the ignition switch OFF.

12. Disconnect the VTEC solenoid valve 1P connector.

13. Check for continuity on the VTEC solenoid valve between the solenoid valve 1P connector terminal and body ground.

VTEC SOLENOID VALVE 1P CONNECTOR

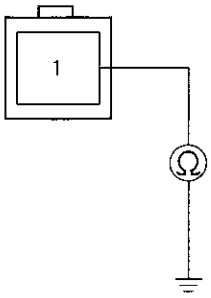

Terminal side of male terminal

Is there 14—30 Ω ?

YES—Go to step 14.

NO—Replace the VTEC solenoid valve.■

14. Remove the VTEC oil pressure switch (A) and install the special tools as shown, then reinstall the VTEC oil pressure switch.

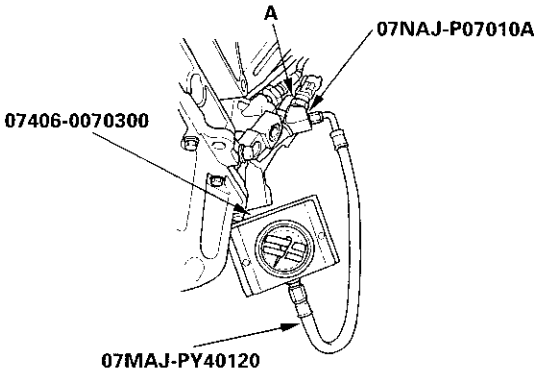

15. Reconnect the VTEC solenoid valve 1P connector and VTEC oil pressure switch 2P connector.

16. Connect a tachometer.

17. Warm up the engine to normal operating temperature (cooling fan comes on).

18. Check oil pressure at engine speeds of 1,000, 2,000 and 3,000 rpm. Keep measuring time as short as possible because the engine is running with no load (less than 1 minute).

Is pressure below 49 kPa (0.5 kgf/cm², 7 psi)?

YES—Go to step 19.

NO—Inspect the VTEC solenoid valve (see page 6-9).■

19. Turn the ignition switch OFF.

20. Disconnect the VTEC solenoid valve 1P connector.

21. Attach the battery positive terminal to the VTEC solenoid valve terminal.

22. Start the engine and check oil pressure at an engine speed of 3,000 rpm.

Is pressure above 390 kPa (4.0 kgf/cm², 57 psi)?

YES—Go to step 23.

NO—Inspect the VTEC solenoid valve (see page 6-9).■

(cont'd)

DTC Troubleshooting (cont'd)

23. With the battery positive terminal still connected to the VTEC solenoid valve, measure voltage between C10 and body ground.

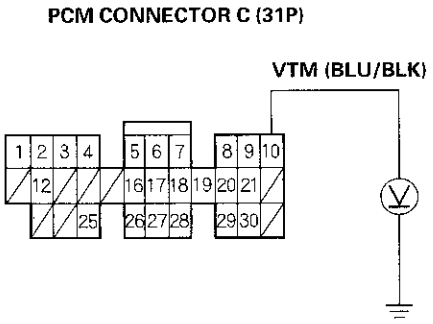

Wire side of female terminals

Is there battery voltage above 4,000 rpm?

YES—Go to step 24.

NO—Replace the VTEC oil pressure switch. ■

24. Turn the ignition switch OFF.

25. Disconnect the battery positive terminal from the VTEC solenoid valve terminal.

26. Check for continuity between the VTEC solenoid valve harness 1P connector terminal and the PCM connector terminal B12.

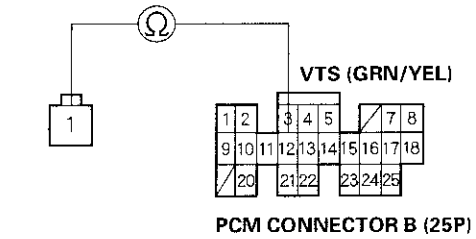

Wire side of female terminals

Is there continuity?

YES—Go to step 27.

NO—Repair open in the wire between the PCM (B12) and VTEC solenoid valve connector. ■

27. Check for continuity between the VTEC solenoid valve 1P connector terminal and body ground.

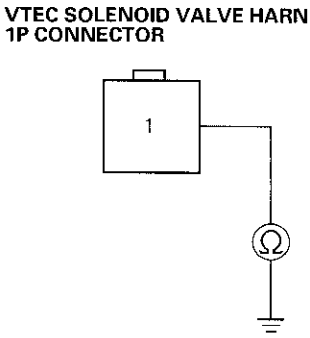

Wire side of female terminal

Is there continuity?

YES—Repair short in the wire between the PCM (B12) and VTEC solenoid valve connector. ■

NO—Substitute a known-good PCM and recheck. If symptom/indication goes away, replace the original PCM. ■

VTEC Solenoid Valve Test

1. Disconnect the 1P connector from the VTEC solenoid valve.

2. Measure resistance between the terminal and body ground.

   Resistance: 14—30 Ω

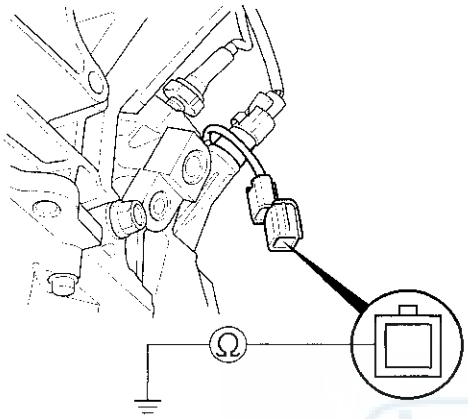

3. If the resistance is within specifications, remove the VTEC solenoid valve/oil filter assembly (A) from the oil pump, and check the VTEC solenoid valve filter (B) for clogging. If there is clogging, clean the filter and replace the engine oil filter and the engine oil.

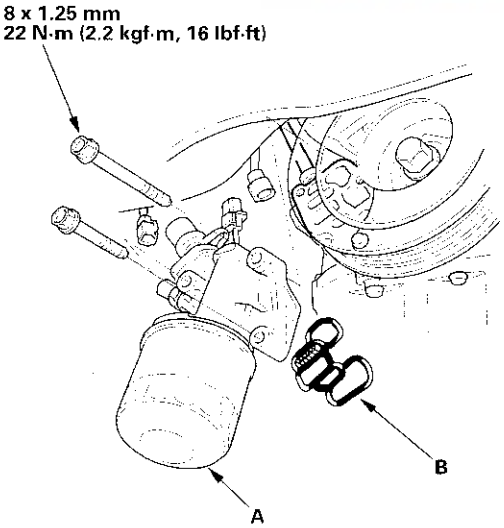

4. If the filter is not clogged, push the VTEC solenoid valve with your finger and check its movement. If the VTEC solenoid valve is normal, check the engine oil pressure.

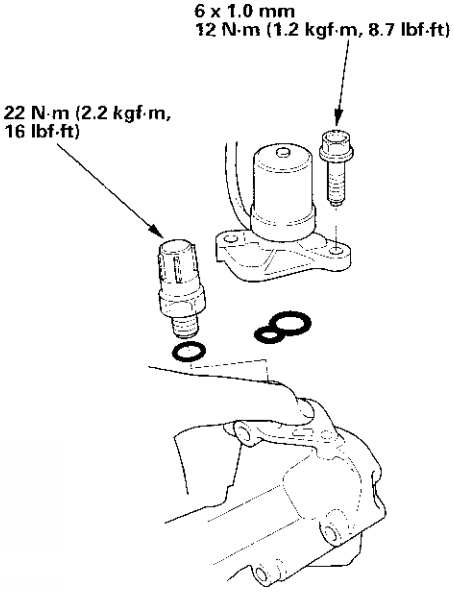

VTEC Rocker Arm Test

Special Tools Required
- VTEC Air Adapter 07VAJ-P8A010A
- VTEC Air Stopper 07VAJ-P8A020A

1. '98-99 models: Remove the throttle body cover (A), ignition wire cover (B) and intake manifold covers (C).
   '00-01 models: Remove the throttle body cover (A), intake manifold covers (B) and intake manifold cover stay (C).

   '98-99 models:

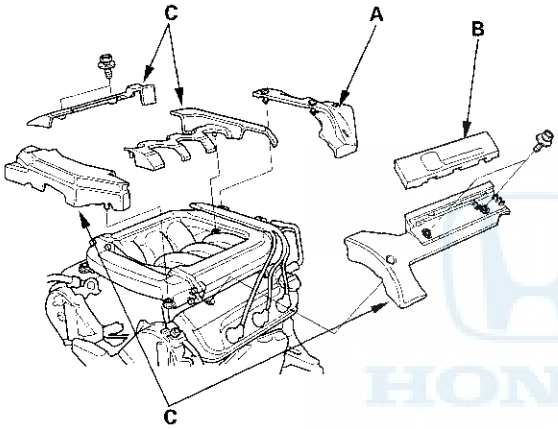

   '00-01 models:

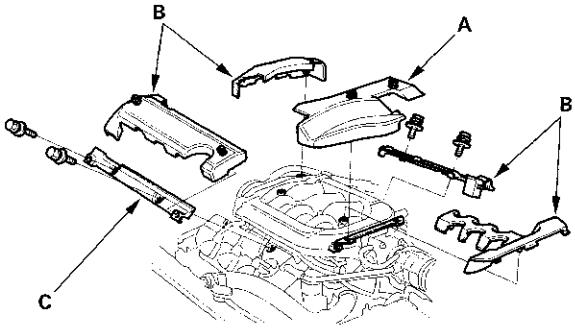

2. Remove the evaporative emission (EVAP) canister hose (A) from the throttle body.

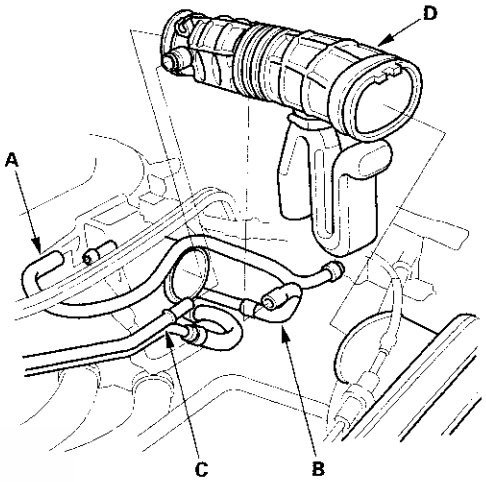

3. Remove the vacuum hose (B) and breather pipe (C), then remove the intake air duct (D).

4. Remove the throttle cable (A) and cruise control cable (B) by loosening the locknuts (C), then slip the cable ends out of the accelerator linkage. Take care not to bend the cables when removing them. Always replace any kinked cable with a new one.

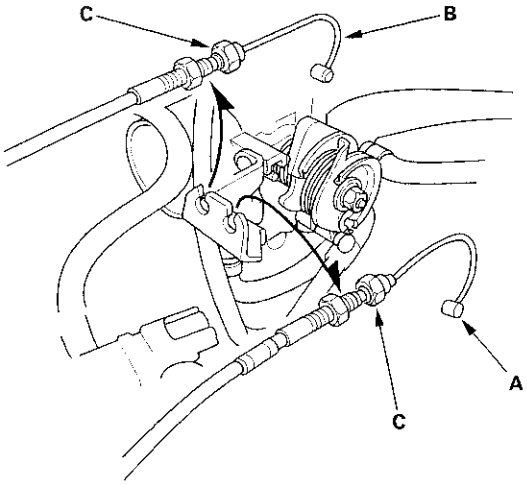

5. Remove the brake booster vacuum hose (A), vacuum hoses (B) and positive crankcase ventilation (PCV) hose (C).

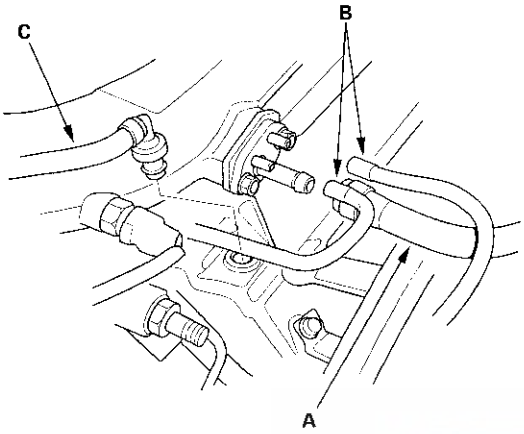

6. Remove the vacuum hose (A) ('98-99 models), breather hose (B) and water bypass hoses (C).

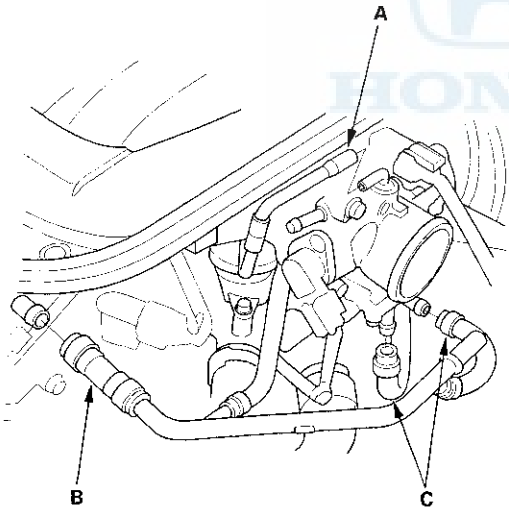

7. Remove the intake manifold.

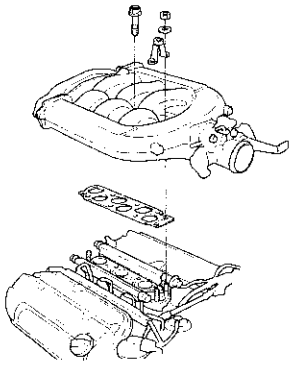

8. Remove the cylinder head covers.

9. Remove the front upper cover (see step 2 on page 6-18).

10. Set the No. 1 piston at TDC (see step 10 on page 6-14).

11. Push on the intake mid rocker arm (A) for the No. 1 cylinder. The mid rocker arm should move independently of the primary rocker arm (B) and secondary rocker arm (C).
    - If the intake mid rocker arm does not move, remove the mid, primary, and secondary intake rocker arms as an assembly, and check that the pistons in the mid and primary rocker arms move smoothly. If any rocker arm needs replacing, replace the primary, mid and secondary rocker arms as an assembly, and retest.
    - If the mid rocker arm moves freely, go to step 12.

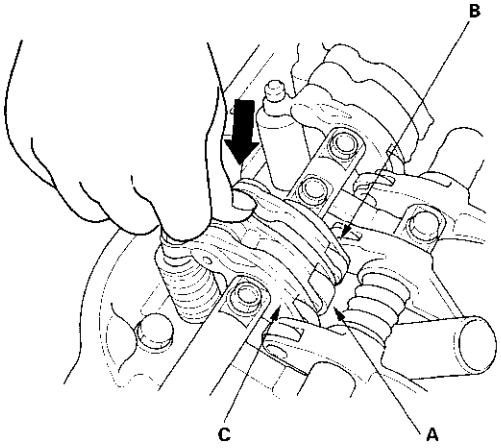

(cont'd)

VTEC Rocker Arm Test (cont'd)

12. Repeat step 11 on the remaining intake mid rocker arms with each piston at TDC. When all the mid rocker arms pass the test, go to step 13.

13. Check that the air pressure on the shop air compressor gauge indicates over 690 kPa (7.0 kgf/cm^2, 100 psi).

14. Inspect the valve clearance (see page 6-13).

15. Cover the timing belt with a shop towel to protect the belt.

16. Remove the 2 intake rocker shaft mounting bolts, then connect the special tools and Valve Inspection an air pressure regulator with a 0—100 psi gauge (A) as shown below.

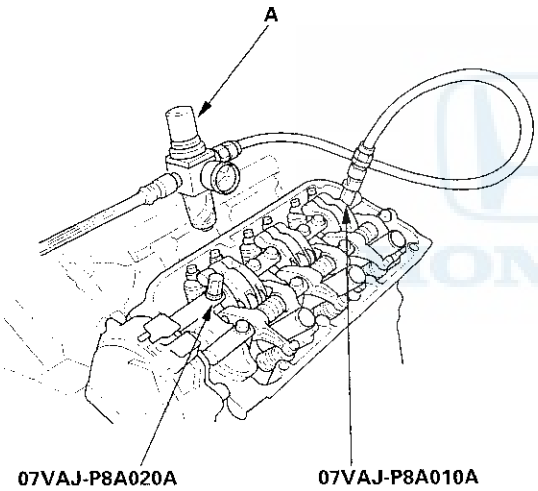

17. Loosen the valve on the regulator and apply the specified air pressure.

    Specified Air Pressure:
    390 kPa (4.0 kgf/cm^2, 57 psi)

    NOTE: If the synchronizing pistons A and B do not move after applying air pressure; move the primary or secondary rocker arm up and down manually by rotating the crankshaft clockwise.

18. Make sure that the intake primary rocker arm (A) and intake secondary rocker arm (B) are mechanically connected by the piston and that the mid rocker arm (C) does not move when pushed manually. If any intake mid rocker arm moves independently of the primary and secondary rocker arms, replace the rocker arms as a set.

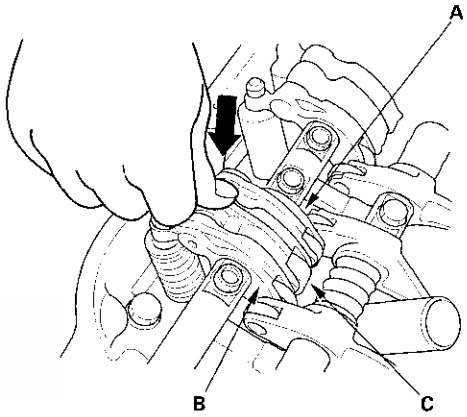

19. Remove the tools.

20. Check for smooth operation of each lost motion assembly (see page 6-37). Replace the lost motion assembly if it does not move smoothly.

21. After inspection, check that the MIL does not come on.

Valve Clearance Adjustment

NOTE: Adjust the valves only when the cylinder head temperature is less than 100°F (38°C).

1. '98-99 models: Remove the throttle body cover (A), ignition wire cover (B) and intake manifold covers (C).
   '00-01 models: Remove the throttle body cover (A), intake manifold covers (B) and intake manifold cover stay (C).

   '98-99 models:

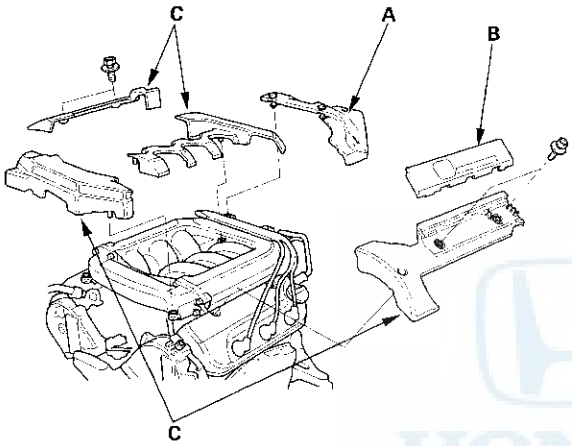

   '00-01 models:

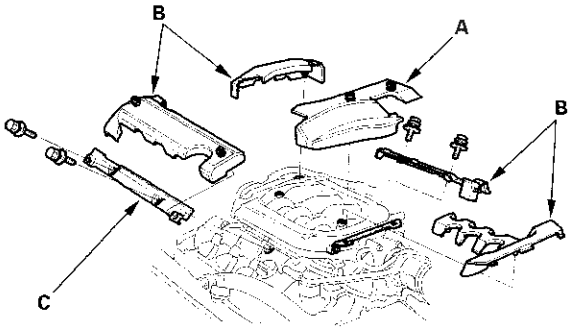

2. Remove the EVAP canister hose (A) from the throttle body.

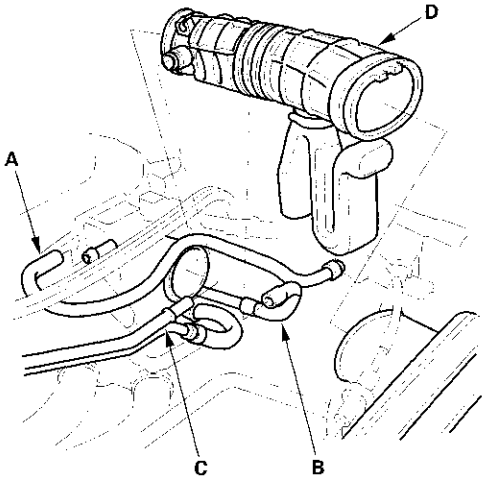

3. Remove the vacuum hose (B) and breather pipe (C), then remove the intake air duct (D).

4. Remove the throttle cable (A) and cruise control cable (B) by loosening the locknuts (C), then slip the cable ends out of the accelerator linkage. Take care not to bend the cables when removing them. Always replace any kinked cable with a new one.

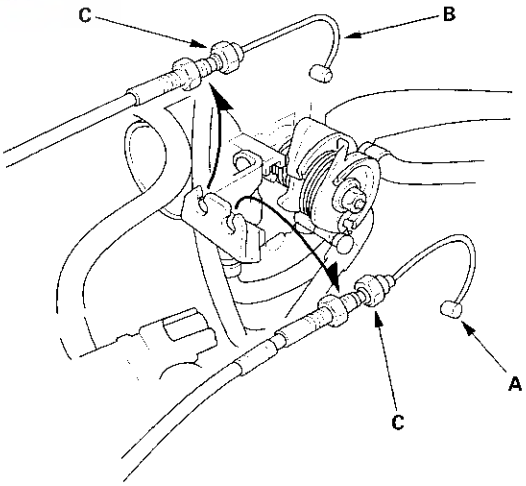

(cont'd)

Valve Clearance Adjustment (cont'd)

5. Remove the brake booster vacuum hose (A), vacuum hoses (B) and positive crankcase ventilation (PCV) hose (C).

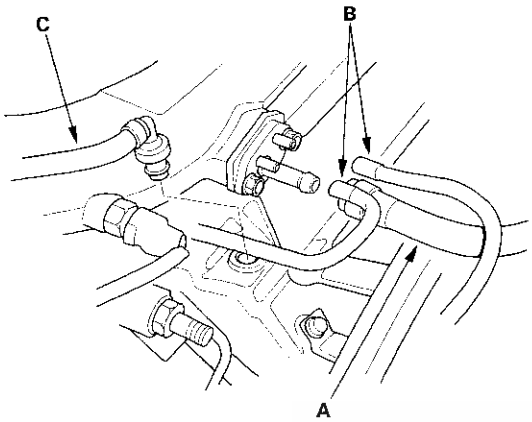

6. Remove the vacuum hose (A) ('98-99 models), breather hose (B) and water bypass hoses (C).

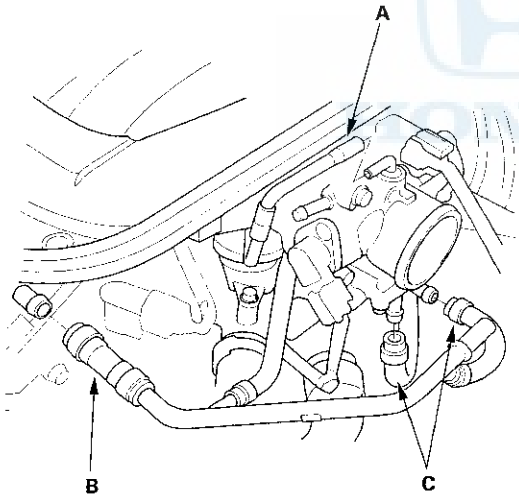

7. Remove the intake manifold.

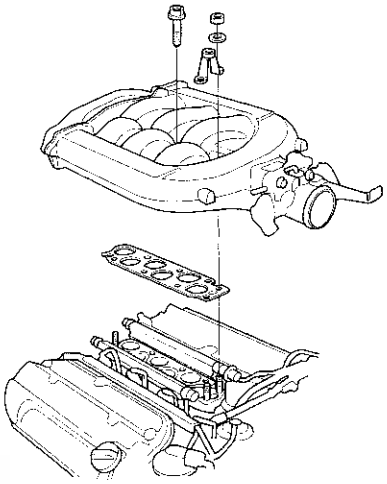

8. Remove the cylinder head covers.

9. Remove the front upper cover (see step 2 on page 6-18).

10. Set the No. 1 piston at TDC. Align the pointer (A) on the back cover with the No. 1 piston TDC mark (B) on the front camshaft pulley.

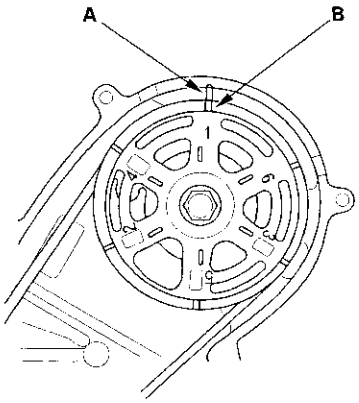

11. Select the correct thickness feeler gauge for the valves you're going to check.

Intake: 0.20 – 0.24 mm (0.008 – 0.009 in.)
Exhaust: 0.28 – 0.32 mm (0.011 – 0.013 in.)

Adjusting screw locations:

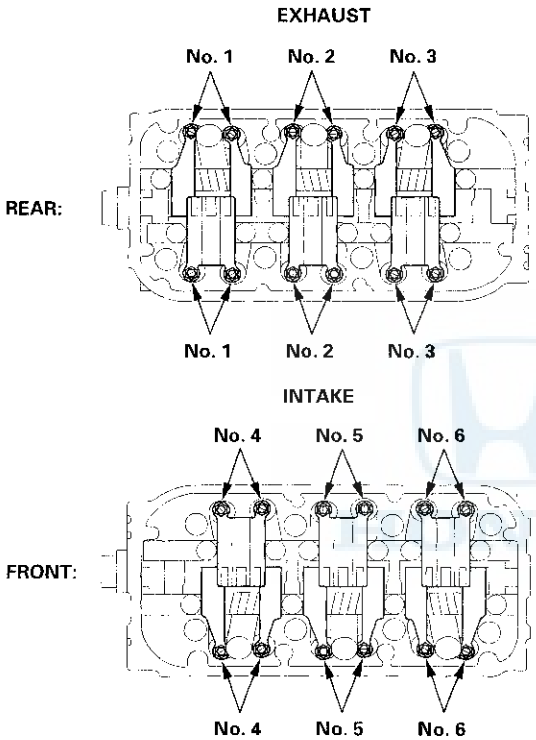

12. Insert the feeler gauge (A) between the adjusting screw (B) and the end of the valve stem and slide it back and forth; you should feel a slight amount of drag.

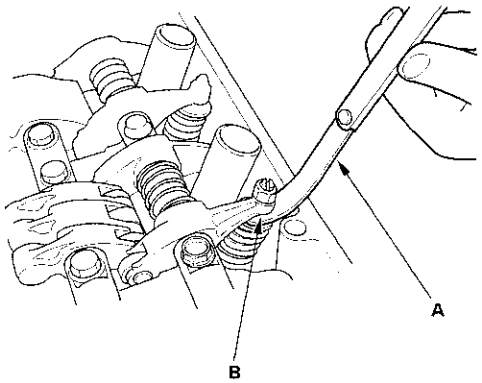

13. If you feel too much or too little drag, loosen the locknut (A), and turn the adjusting screw (B) until the drag on the feeler gauge is correct.

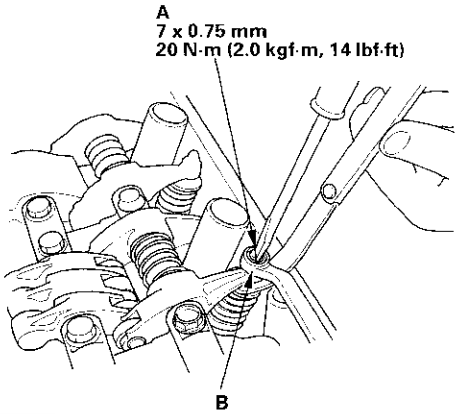

14. Tighten the locknut and recheck the clearance. Repeat the adjustment if necessary.

15. Rotate the crankshaft clockwise. Align the pointer (A) on the back cover with the No. 4 piston TDC mark (B) on the front camshaft pulley.

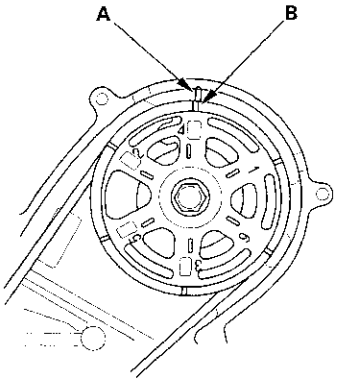

16. Check and, if necessary, adjust the valve clearance on No. 4 cylinder.

(cont'd)

Valve Clearance Adjustment (cont'd)

17. Rotate the crankshaft clockwise. Align the pointer (A) on the back cover with the No. 2 piston TDC mark (B) on the front camshaft pulley.

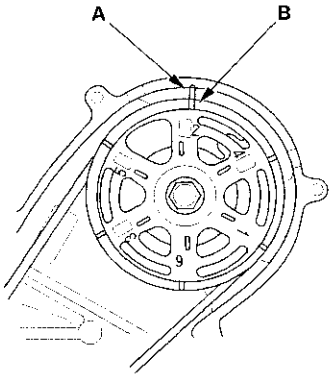

18. Check and, if necessary, adjust the valve clearance on No. 2 cylinder.

19. Rotate the crankshaft clockwise. Align the pointer (A) on the back cover with the No. 5 piston TDC mark (B) on the front camshaft pulley.

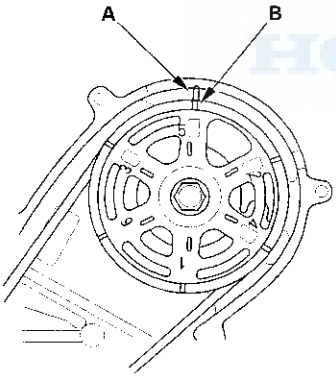

20. Check and, if necessary, adjust the valve clearance on No. 5 cylinder.

21. Rotate the crankshaft clockwise. Align the pointer (A) on the back cover with the No. 3 piston TDC mark (B) on the front camshaft pulley.

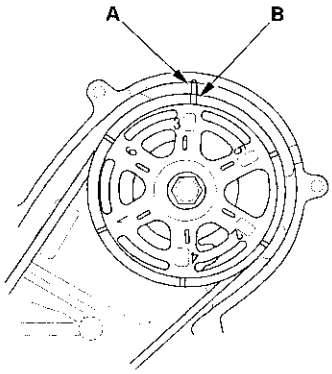

22. Check and, if necessary, adjust the valve clearance on No. 3 cylinder.

23. Rotate the crankshaft clockwise. Align the pointer (A) on the back cover with the No. 6 piston TDC mark (B) on the front camshaft pulley.

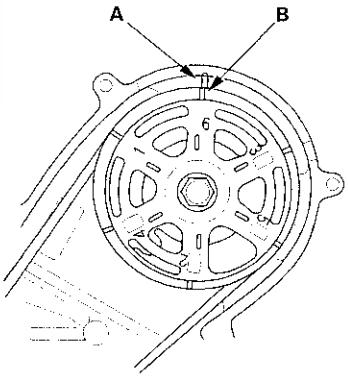

24. Check and, if necessary, adjust the valve clearance on No. 6 cylinder.

Crankshaft Pulley Removal and Installation

Special Tools Required
- Holder Handle 07JAB-001020A
- Holder Attachment, 50 mm, Offset 07MAB-PY3010A
- Socket, 19 mm 07JAA-001020A
  or a commercially available 19 mm socket

Removal

1. Hold the pulley with holder handle (A) and holder attachment (B).

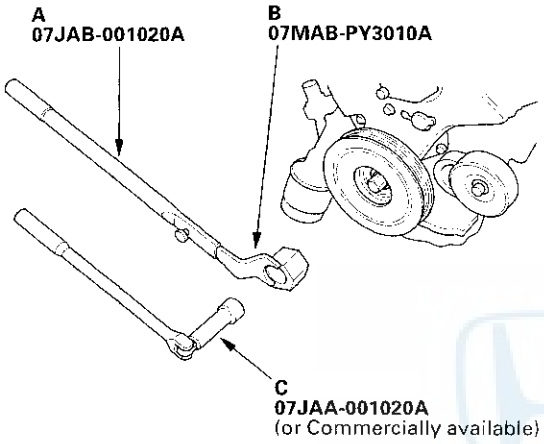

2. Remove the bolt with a heavy duty 19 mm socket (C) and breaker bar.

Installation

1. Remove any oil from the pulleys (A), crankshaft (B), bolt (C) and washer (D). Clean and lubricate the points shown below.

○ : Clean
× : Remove any oil
● : Lubricate

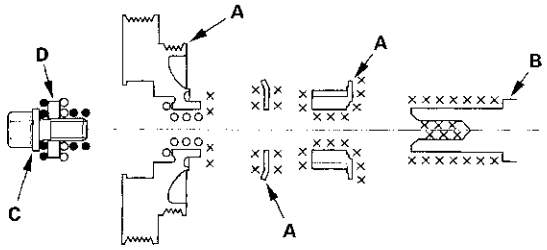

2. Install the crankshaft pulley, and tighten the bolt to 245 N·m (25.0 kgf·m, 181 lbf·ft). Do not use an impact wrench.

   –1 Hold the pulley with holder handle (A) and holder attachment (B).
   –2 Tighten the bolt with a torque wrench and 19 mm socket (C).

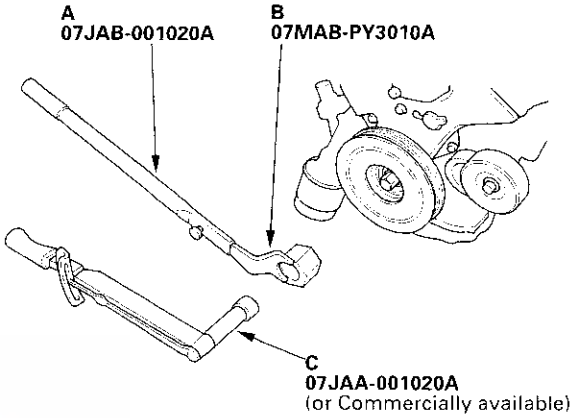

Timing Belt Inspection

1. '98-99 models: Remove the throttle body cover (A), ignition wire cover (B) and intake manifold cover (C).
   '00-01 models: Remove the throttle body cover (A) and intake manifold cover (B).

   '98-99 models:

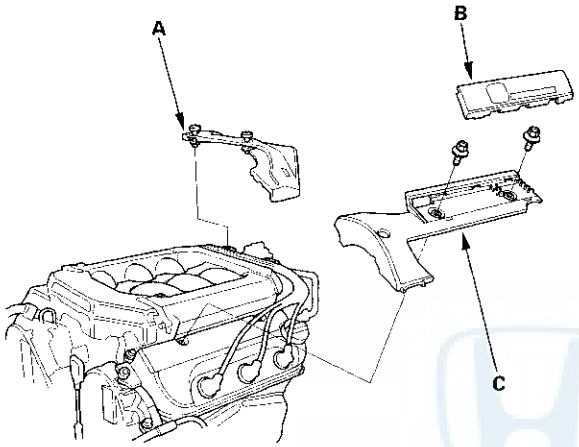

   '00-01 models:

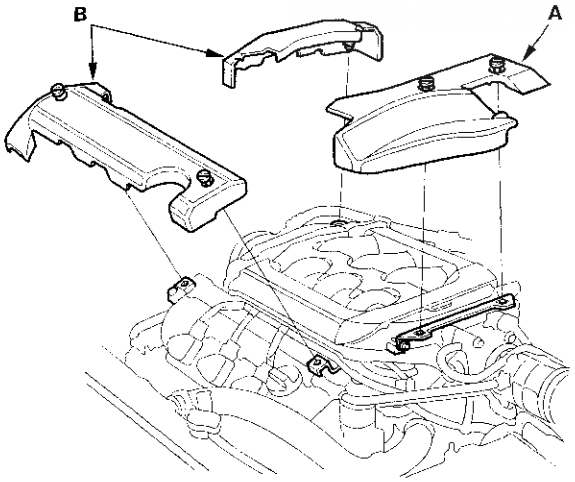

2. Remove the front upper cover.

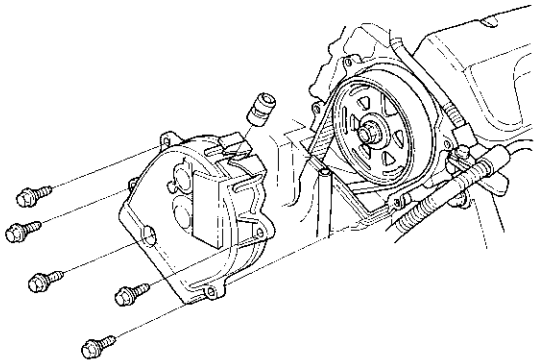

3. Inspect the timing belt for cracks and oil or coolant soaking. Replace the belt if it is oil or coolant soaked. Remove any oil or solvent that gets on the belt.

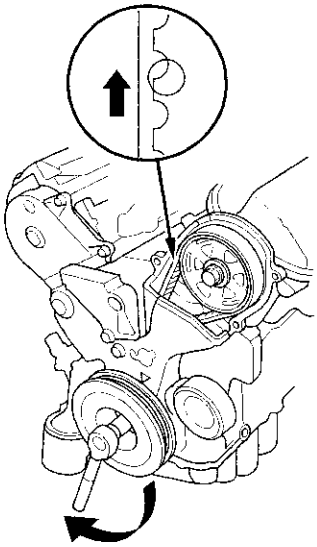

Timing Belt Removal

Special Tools Required
- Holder Handle 07JAB-001020A
- Holder Attachment, 50 mm, Offset 07MAB-PY3010A
- Socket, 19 mm 07JAA-001020A
  or a commercially available 19 mm socket
- Belt Tension Release Arm, YA9317,
  commercially available

1. Turn the crankshaft so its white mark (A) lines up with the pointer (B).

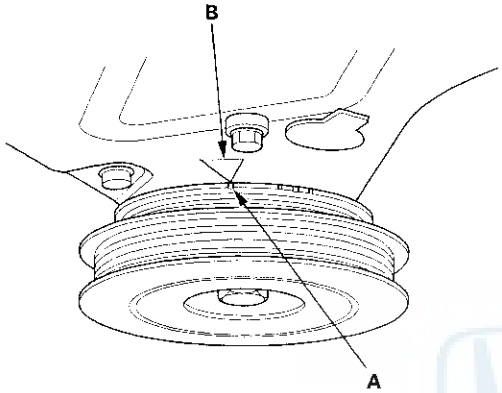

2. Check that the rear camshaft pulley mark (A) and rear upper cover mark (B) are aligned.

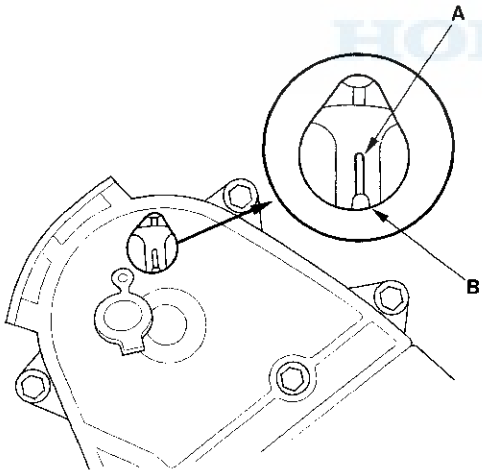

3. Remove the front tires/wheels.

4. Remove the splash shield.

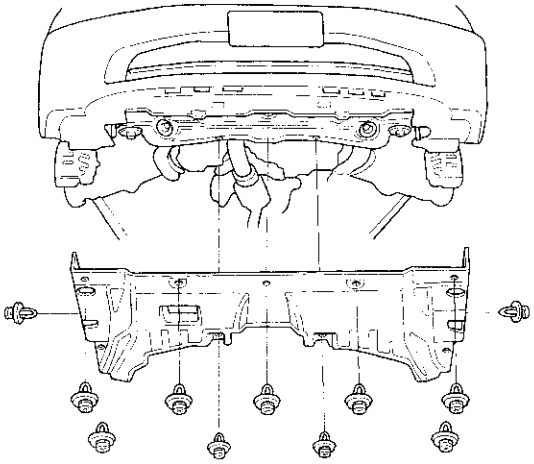

5. Move the auto-tensioner (A) with the belt tension release arm (B) to remove tension from the alternator belt (C), then remove the alternator belt.

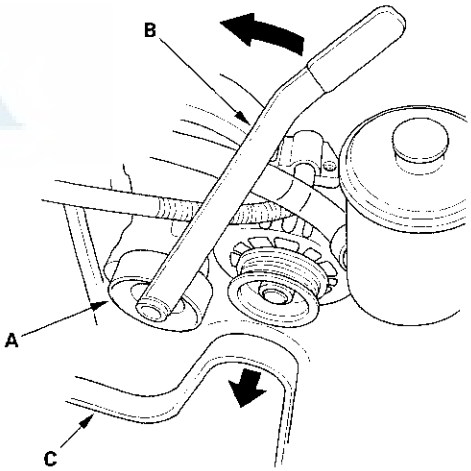

(cont'd)

Timing Belt Removal (cont'd)

6. Loosen the adjusting nut (A), locknut (B) and mounting bolt (C), then remove the power steering (P/S) pump belt (D).

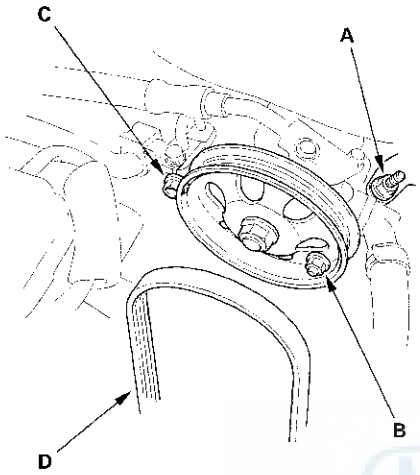

7. Support the engine with a jack and wood block under the oil pan.

8. Remove the side engine mount bracket.

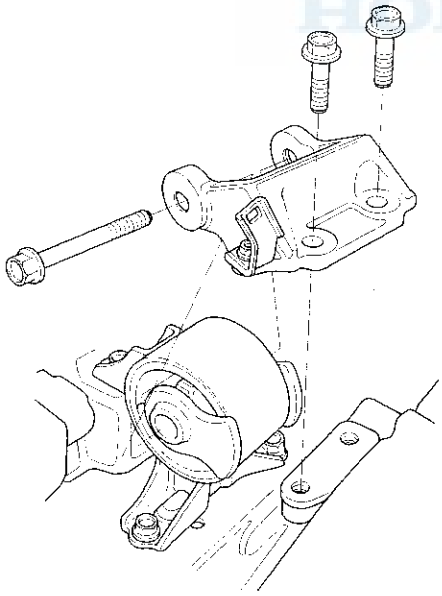

9. Remove the dipstick and tube (A); discard the O-ring (B).

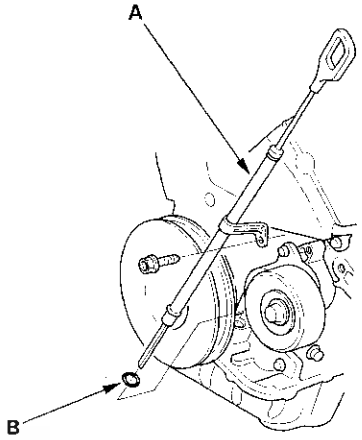

10. Hold the pulley with holder handle (A) and holder attachment (B).

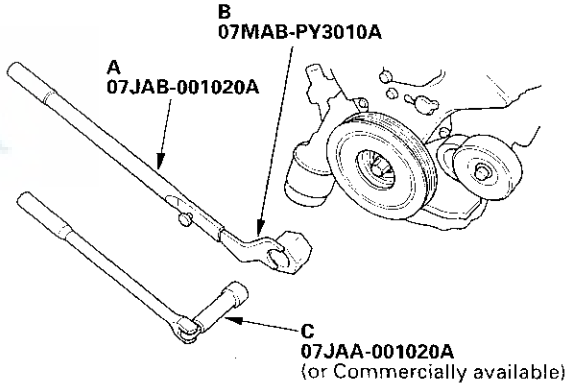

11. Remove the bolt with a heavy duty 19 mm socket (C) and breaker bar.

12. Remove the front upper cover (A), rear upper cover (B) and lower cover (C).

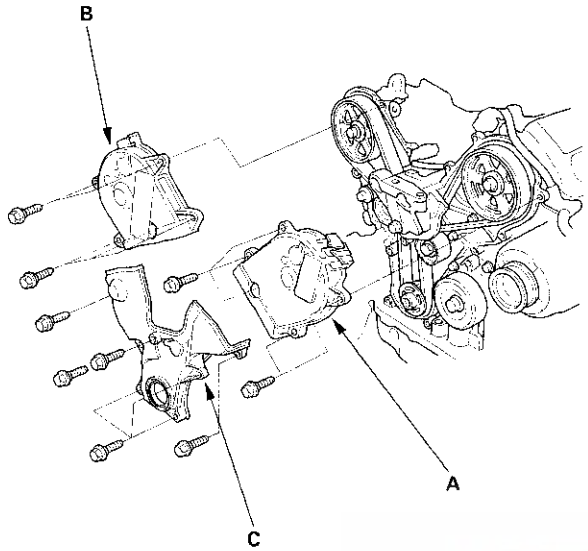

13. Remove one of the battery clamp bolts from the battery tray, and grind the end of it as shown.

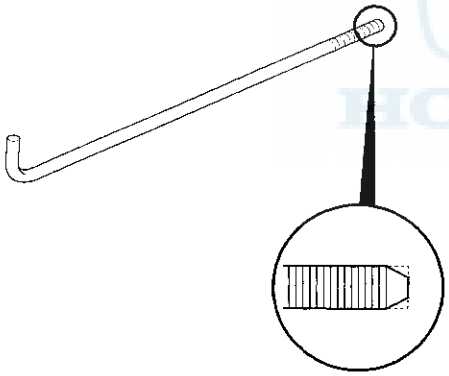

14. To hold the timing belt adjuster its current position, screw the battery clamp bolt in as shown. Tighten it by hand, do not use a wrench.

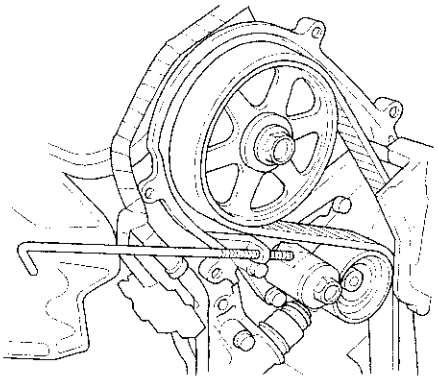

15. Remove the engine mount bracket.

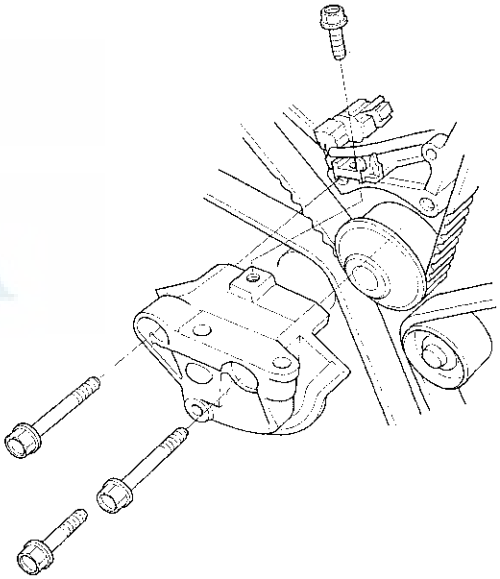

(cont'd)

Timing Belt Removal (cont'd)

16. Loosen the idler pulley bolt (A) about 5 or 6 turns, then remove the timing belt.

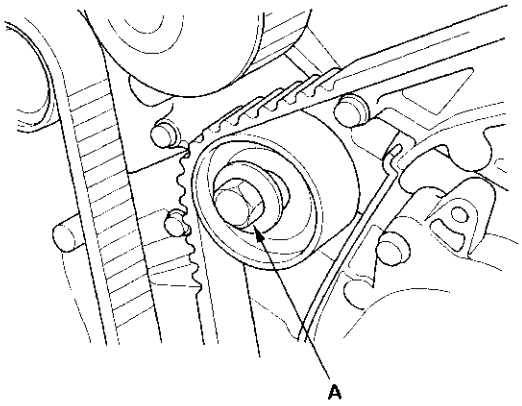

Timing Belt Installation

NOTE: The following procedure is for installing a new timing belt. If you are installing a used timing belt, refer to the next procedure.

New Belt

1. Clean the timing belt pulleys, and upper and lower covers.

2. Set the timing belt drive pulley to TDC by aligning the TDC mark (A) on the tooth of the timing belt drive pulley with the pointer (B) on the oil pump.

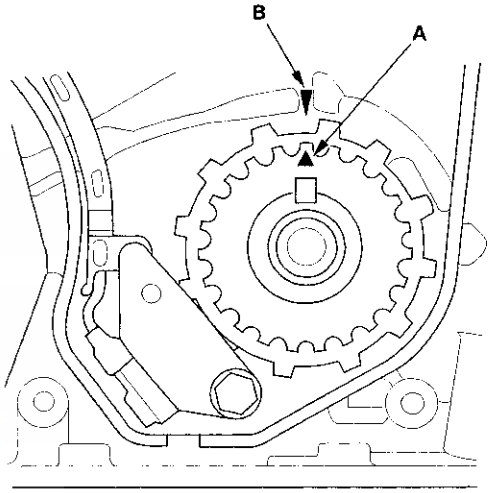

3. Clean the camshaft pulleys. Set the camshaft pulleys to TDC by aligning the TDC marks (A) on the camshaft pulleys with the pointers (B) on the back covers.

FRONT:

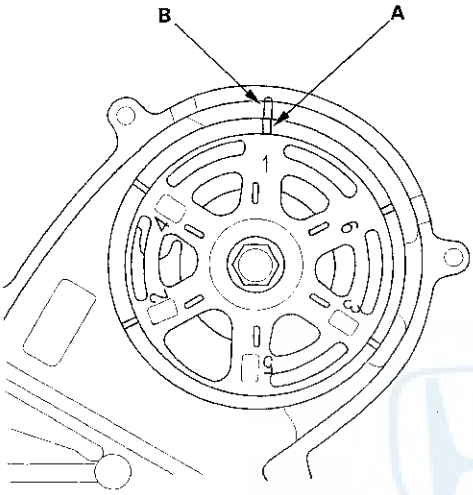

REAR:

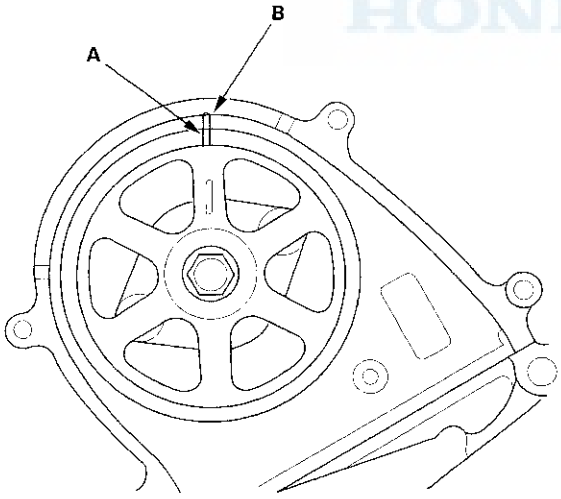

4. Remove the battery clamp bolt from the back cover.

5. Remove the auto-tensioner.

6. Hold the auto-tensioner (A) with the maintenance bolt pointing up. Loosen and remove the maintenance bolt (B).

   NOTE: Handle the auto-tensioner carefully so the oil inside does not spill or leak. If any of the oil has spilled or leaked out of the auto-tensioner, refill it with 5 W-30 motor oil. The total capacity is 6.5 mℓ (0.22 fl oz).

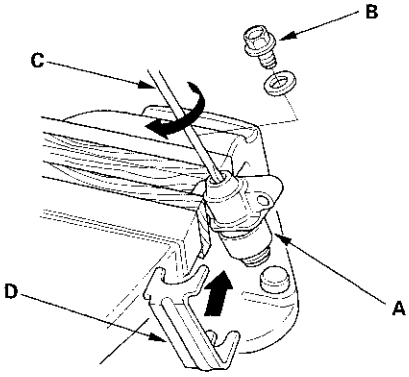

7. Clamp the boss of the auto-tensioner in a soft-jawed vise. Do not grip the housing of the auto-tensioner.

8. Insert a flat blade screwdriver (C) into the maintenance hole. Place the holder (D) (P/N 14540-P8A-A01) on the auto-tensioner while turning the screwdriver clockwise to compress the bottom.

   NOTE: Take care not to damage the threads or the gasket contact surface with the screwdriver.

9. Reinstall the maintenance bolt (A). Always use a new gasket (B).

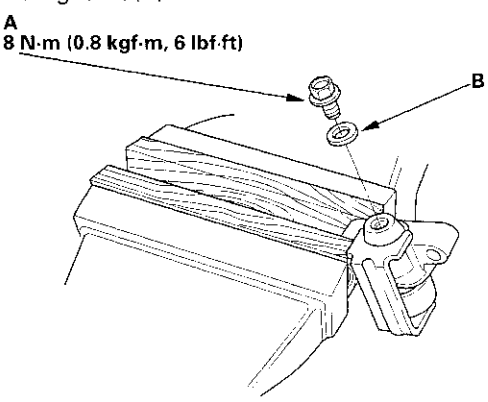

(cont'd)

Timing Belt Installation (cont'd)

10. Make sure no oil is leaking around the maintenance bolt, then install the auto-tensioner (A).

    NOTE: Make sure the holder (B) stays in place.

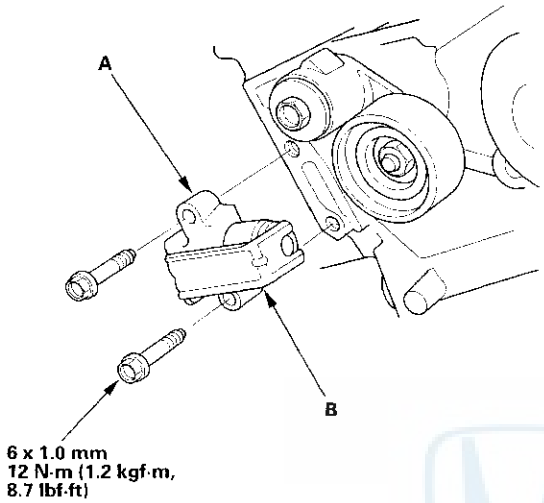

11. Install the timing belt in a counter clockwise sequence starting with the drive pulley.

    –1 Drive pulley (A).
    –2 Idler pulley (B).
    –3 Front camshaft pulley (C).
    –4 Water pump pulley (D).
    –5 Rear camshaft pulley (E).
    –6 Adjusting pulley (F).

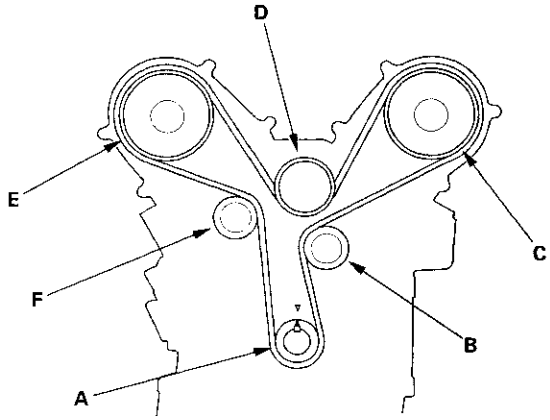

12. Tighten the idler pulley bolt.

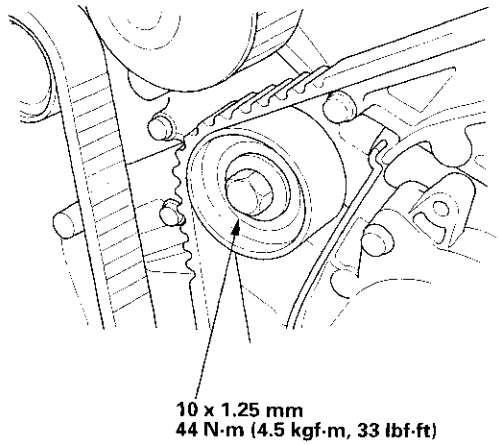

13. Remove the holder.

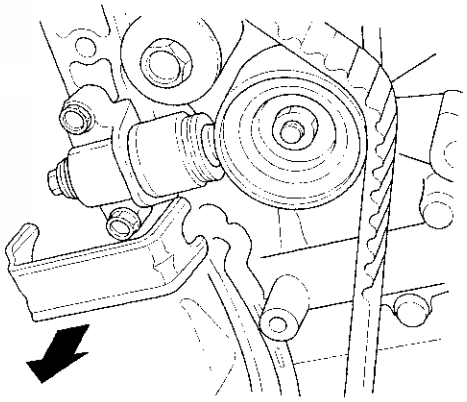

14. Install the engine mount bracket.

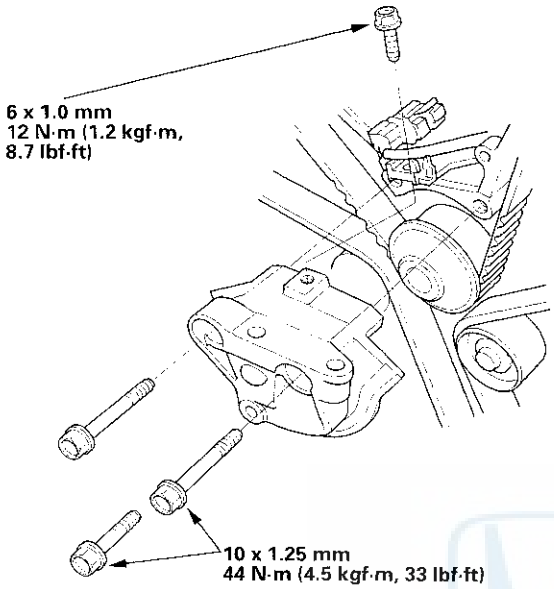

15. Install the lower cover (A), front upper cover (B) and rear upper cover (C).

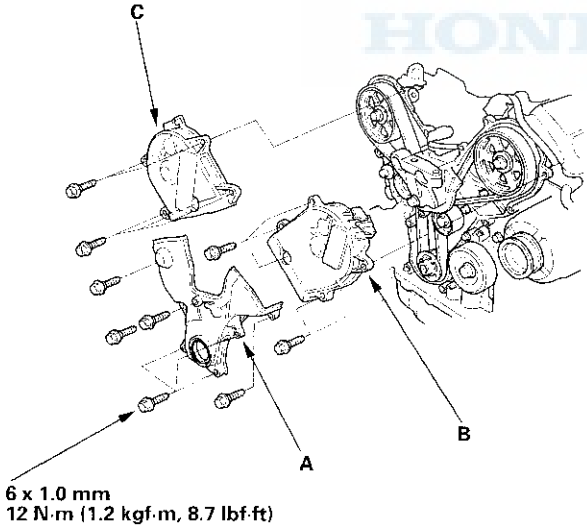

16. Clean the crankshaft pulley bolt and washer.

17. Clean all oil off the inside face (A) of the crankshaft pulley, and apply lubricant to the pulley bolt (B) and washer (C).

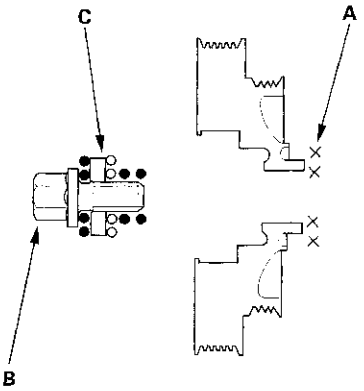

18. Install the crankshaft pulley, and tighten the bolt to 245 N·m (25.0 kgf·m, 181 lbf·ft). Do not use an impact wrench.

   –1 Hold the pulley with holder handle (A) and holder attachment (B).
   –2 Tighten the bolt with a torque wrench and 19 mm socket (C).

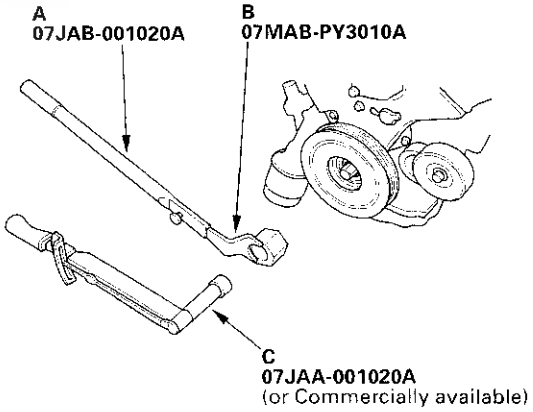

19. Rotate the crankshaft pulley about 5 or 6 turns clockwise so the timing belt positions on the pulleys.

(cont'd)

Timing Belt Installation (cont'd)

20. Turn the crankshaft pulley so its white mark (A) lines up with the pointer (B).

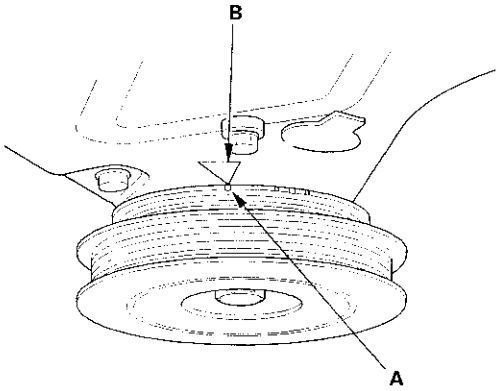

21. Check the camshaft pulley marks.

- If the camshaft pulley marks are at TDC, go to step 22.
- If the camshaft pulley marks are not at TDC, remove the timing belt and repeat steps 2 through 20.

FRONT CAMSHAFT PULLEY:

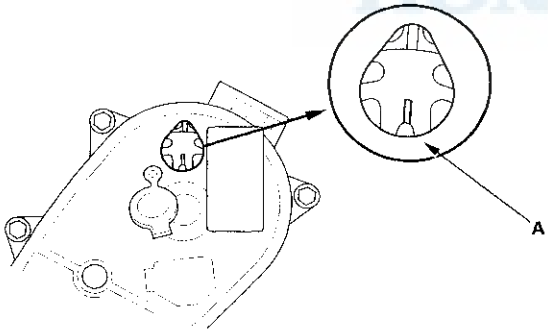

REAR CAMSHAFT PULLEY:

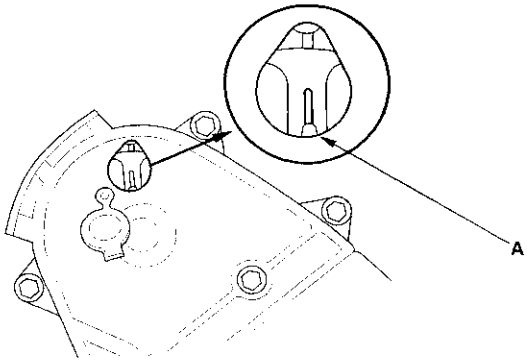

22. Install the dipstick and tube (A) with a new O-ring (B).

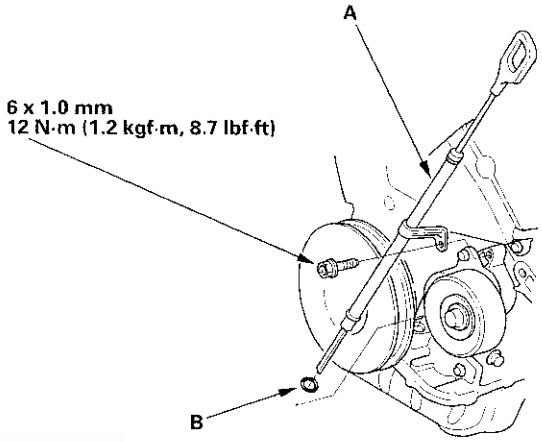

23. Install and adjust the P/S pump belt (see page 17-10).

24. Install the alternator belt.

25. Install the side engine mount bracket, then tighten the mounting bolts in the numbered sequence shown.

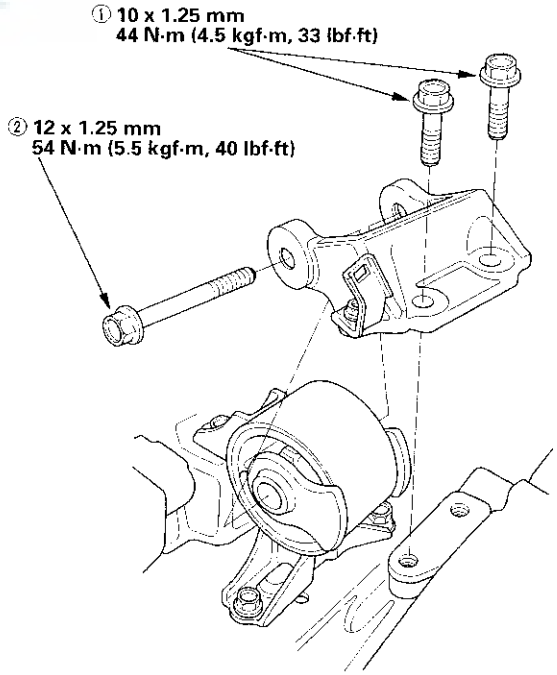

Used Belt

Follow this procedure when installing a used timing belt.

1. Clean the timing belt pulleys, and upper and lower covers.

2. Set the timing belt drive pulley to TDC by aligning the TDC mark (A) on the tooth of the timing belt drive pulley with the pointer (B) on the oil pump.

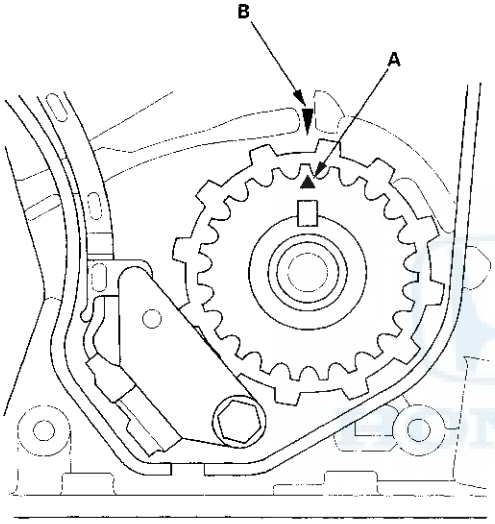

3. Clean the camshaft pulleys. Set the camshaft pulleys to TDC by aligning the TDC marks (A) on the camshaft pulleys with the pointers (B) on the back covers.

FRONT:

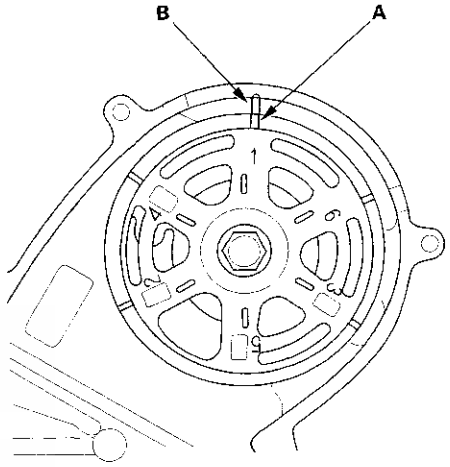

REAR:

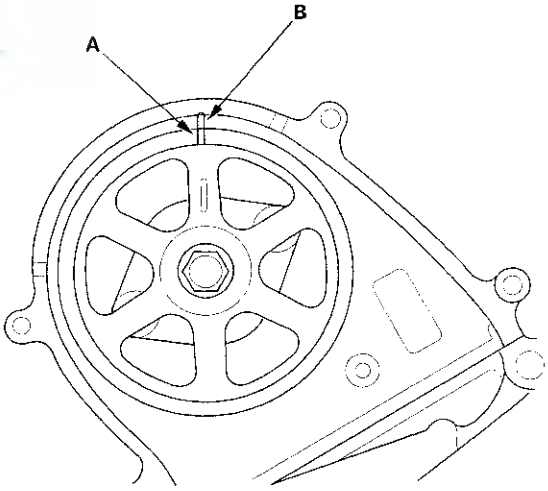

(cont'd)

Timing Belt Installation (cont'd)

4. If the auto-tensioner has extended and the timing belt cannot be installed, remove and compress the auto-tensioner (refer to steps 6-23 of the New Belt Installation Procedure).

5. Install the timing belt in a counter clockwise sequence starting with the drive pulley. Take care not to damage the timing belt when installing it.

   –1 Drive pulley (A).
   –2 Idler pulley (B).
   –3 Front camshaft pulley (C).
   –4 Water pump pulley (D).
   –5 Rear camshaft pulley (E).
   –6 Adjusting pulley (F).

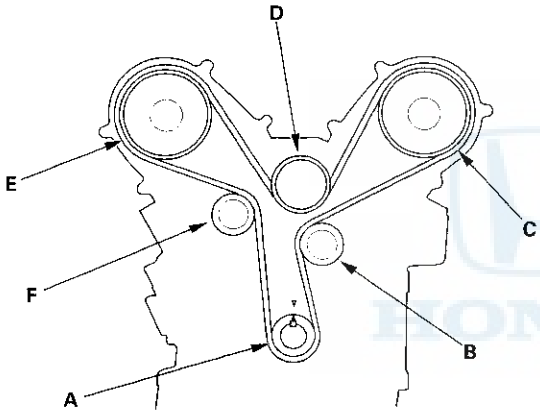

6. Tighten the idler pulley bolt.

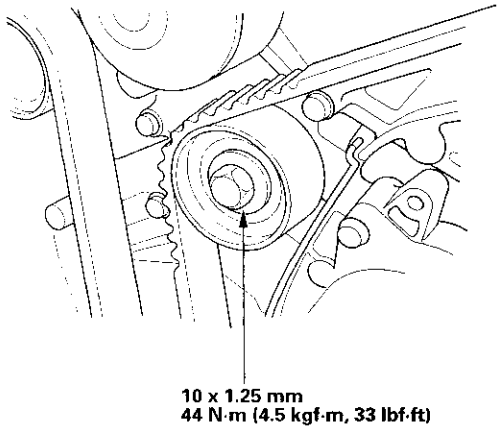

7. Remove the battery clamp bolt from the back cover.

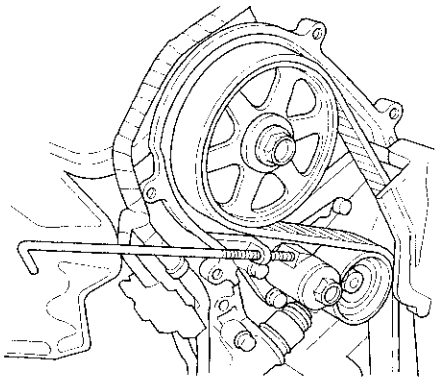

8. Install the engine mount bracket.

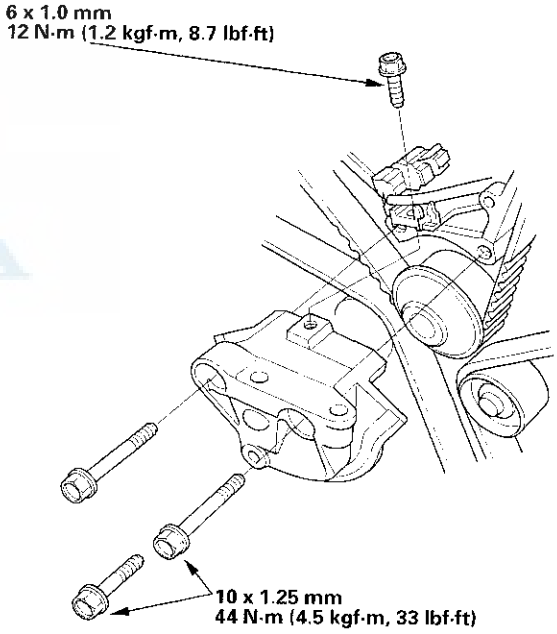

9. Install the lower cover (A), front upper cover (B) and rear upper cover (C).

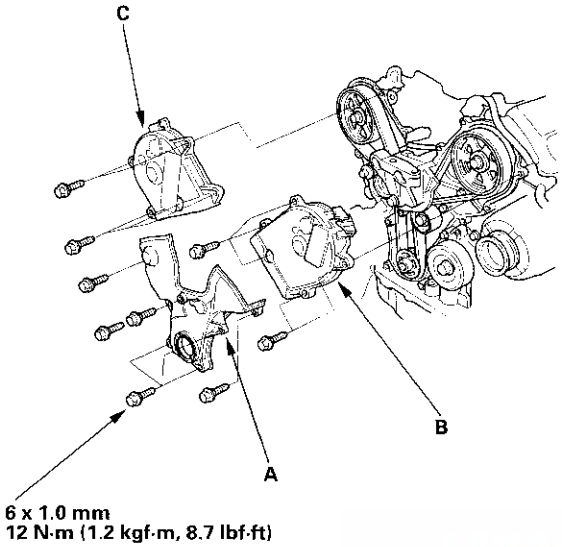

10. Clean the crankshaft pulley bolt and washer.

11. Clean any oil off the inside face (A) of the crankshaft pulley, and apply lubricant to the pulley bolt (B) and washer (C).

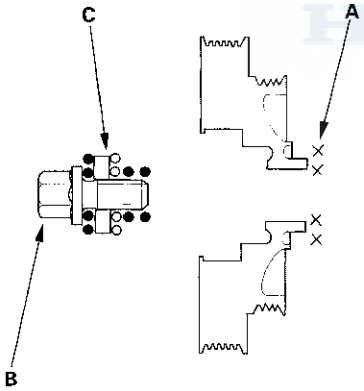

12. Install the crankshaft pulley, and tighten the bolt to 245 N·m (25.0 kgf·m, 181 lbf·ft). Do not use an impact wrench.

   –1 Hold the pulley with holder handle (A) and holder attachment (B).
   –2 Tighten the bolt with a torque wrench and 19 mm socket (C).

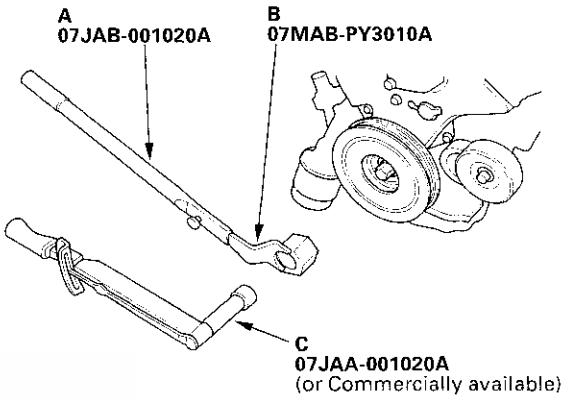

13. Rotate the crankshaft pulley about 5 or 6 turns clockwise so the timing belt positions on the pulleys.

14. Turn the crankshaft pulley so its white mark (A) lines up with the pointer (B).

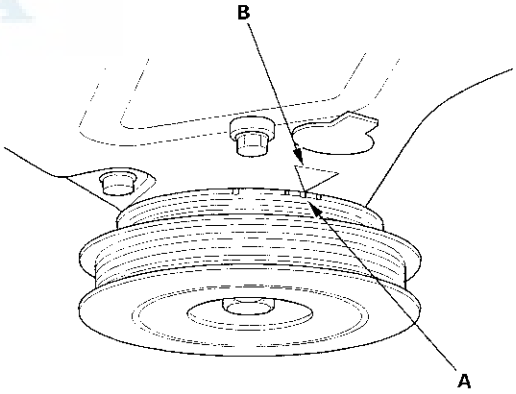

(cont'd)

Timing Belt Installation (cont'd)

15. Check the camshaft pulley marks (A).
    - If the camshaft pulley marks are at TDC, go to step 16.
    - If the camshaft pulley marks are not at TDC, remove the timing belt and repeat steps 2 through 14.

FRONT CAMSHAFT PULLEY:

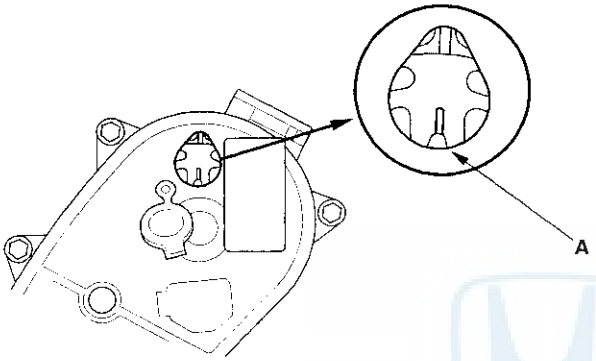

REAR CAMSHAFT PULLEY:

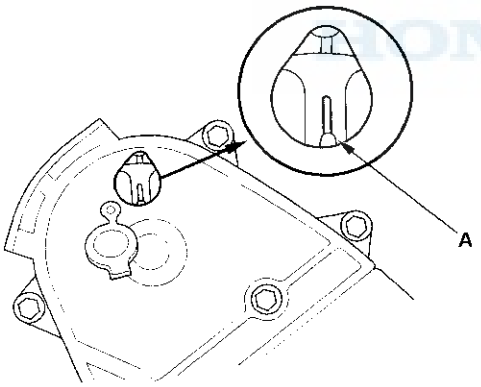

16. Install the dipstick and tube (A) with a new O-ring (B).

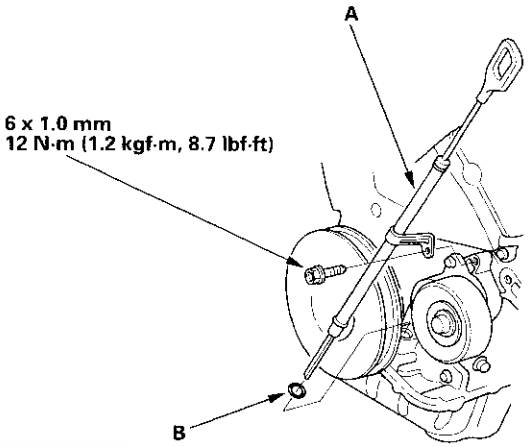

17. Install and adjust the P/S pump belt (see page 17-10).

18. Install the alternator belt.

19. Install the side engine mount bracket, then tighten the mounting bolts in the numbered sequence shown.

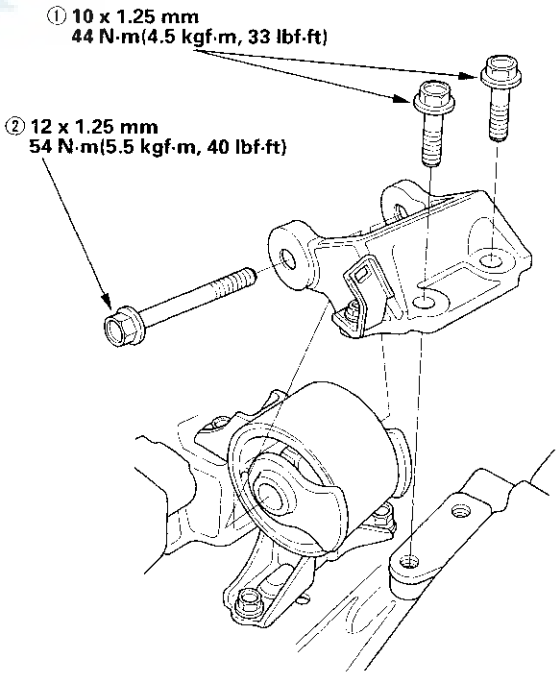

Cylinder Head Removal

Special Tool Required
Belt Tension Release Arm,YA9317, commercially available

Engine removal is not required this procedure.

NOTE:
- Use fender covers to avoid damaging painted surfaces.
- To avoid damage, unplug the wiring connectors carefully while holding the connector portion.
- To avoid damaging the cylinder head, wait until the engine coolant temperature drops below 100°F (38°C) before loosening the retaining bolts.
- Mark all wiring and hoses to avoid misconnection. Also, be sure that they do not contact other wiring or hoses, or interfere with other parts.

1. Make sure you have the anti-theft code for the radio, then write down the frequencies for the radio's preset buttons.

2. Disconnect the battery negative terminal.

3. Drain the engine coolant (see page 10-10).

4. '98-99 models: Remove the throttle body cover (A), ignition wire cover (B) and intake manifold covers (C).

   '00-01 models: Remove the throttle body cover (A), intake manifold covers (B) and intake manifold cover stay (C).

   '98-99 models:

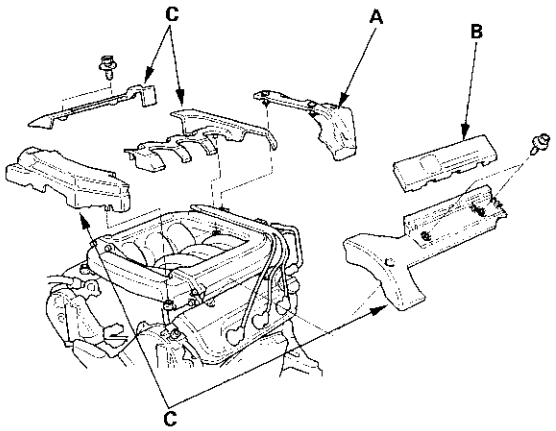

'00-01 models:

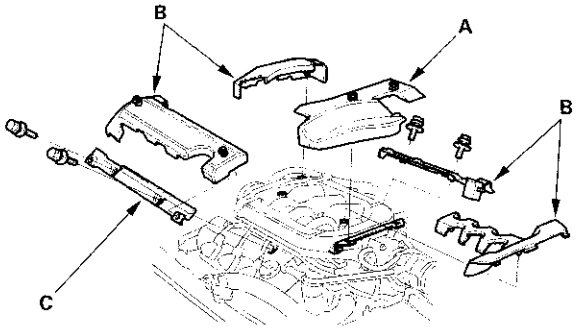

5. Remove the EVAP canister hose (A) from the throttle body.

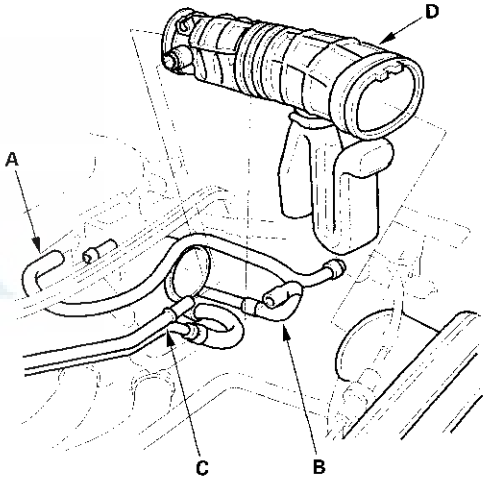

6. Remove the vacuum hose (B) and breather pipe (C), then remove the intake air duct (D).

(cont'd)

Cylinder Head Removal (cont'd)

7. Remove the throttle cable (A) and cruise control cable (B) by loosening the locknuts (C), then slip the cable ends out of the accelerator linkage.Take care not to bend the cables when removing them. Always replace any kinked cable with a new one.

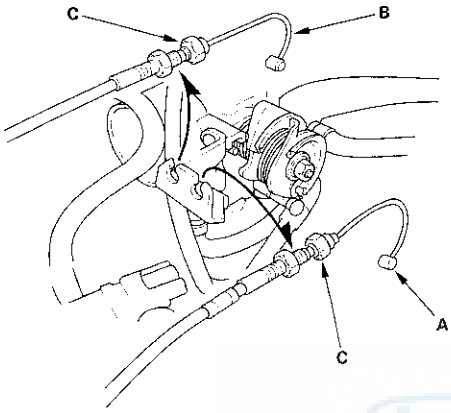

8. Relieve fuel pressure (see page 11-88).

9. Remove the fuel feed hose (A) and fuel return hose (B).

'98-99 models:

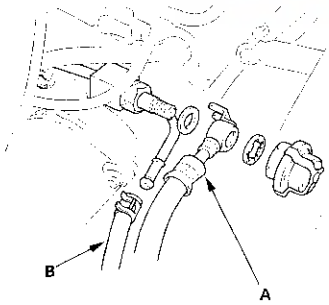

'00-01 models

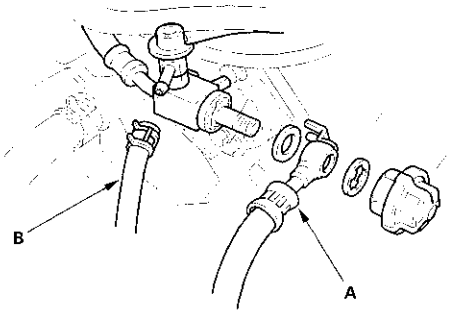

10. Remove the brake booster vacuum hose (A), vacuum hoses (B) and PCV hose (C).

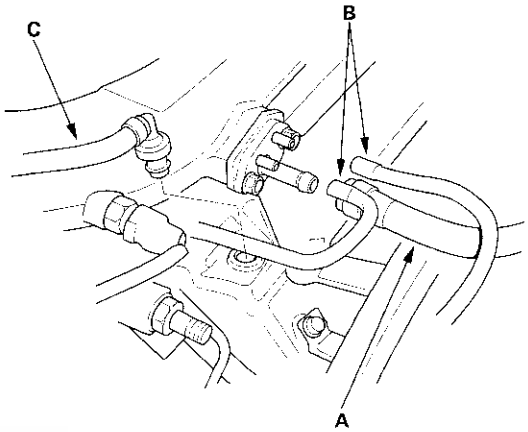

11. Remove the vacuum hose (A), ('98-99 models) breather hose (B) and water bypass hoses (C).

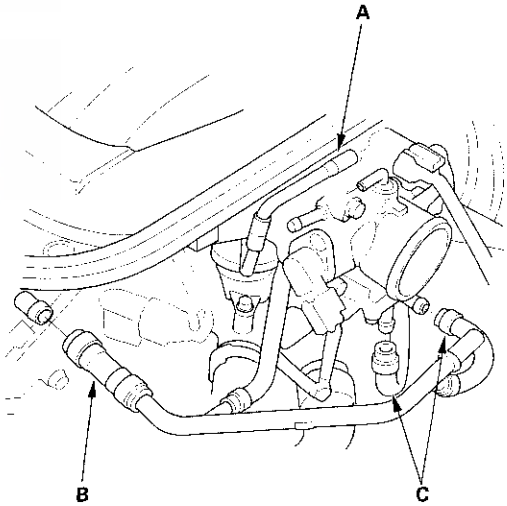

12. Remove the ground cable (A).

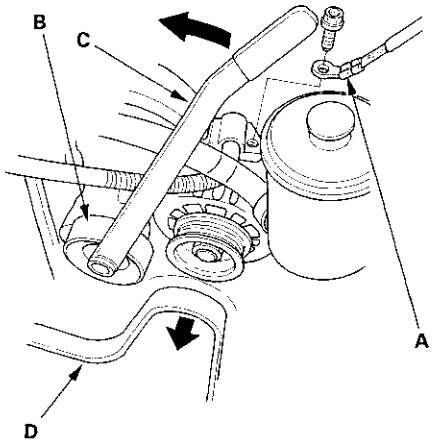

13. Move the auto-tensioner (B) with the belt tension release arm (C) to remove tension from the alternator belt (D), then remove the alternator belt.

14. Support the engine with a jack and wood block under the oil pan.

15. Remove the side engine mount bracket.

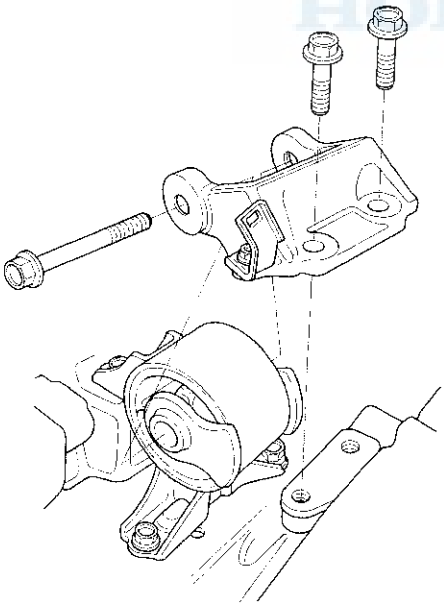

16. Loosen the adjusting nut (A), then remove the locknut (B) and mounting bolt (C). Remove the power steering (P/S) pump belt (D) and pump without disconnecting the P/S hoses.

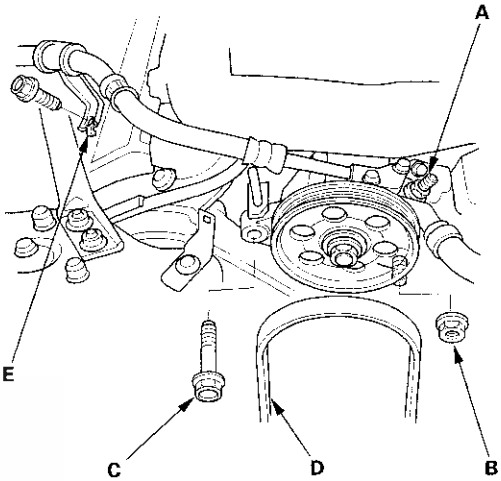

17. Remove the P/S hose clamp (E).

18. Remove the alternator (see page 4-31).

19. Remove the engine wire harness connectors and wire harness clamps from the cylinder heads and the intake manifold.

- Intake air temperature (IAT) sensor connector
- Idle air control (IAC) valve connector
- Throttle position sensor connector
- Manifold absolute pressure (MAP) sensor connector
- Engine coolant temperature (ECT) sensor connector
- Radiator fan switch A connector
- Radiator fan switch B connector
- Coolant temperature gauge sending unit connector ('98-99 models)
- CKP sensor connector
- TDC sensor connector
- Exhaust gas recirculation (EGR) valve connector
- Distributor connector ('98-99 models)
- VTEC solenoid valve connector
- VTEC oil pressure switch connector
- Oil pressure switch connector

20. Remove the spark plug caps and distributor from the cylinder heads.

(cont'd)

Cylinder Head Removal (cont'd)

21. Remove the intake manifold.

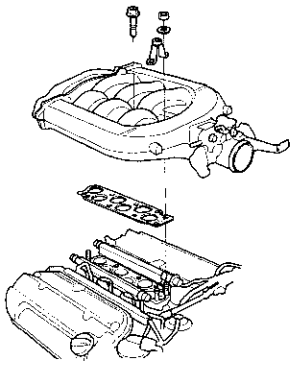

22. Disconnect the 6 injector connectors.

23. Remove the fuel rails.

'98-99 models:

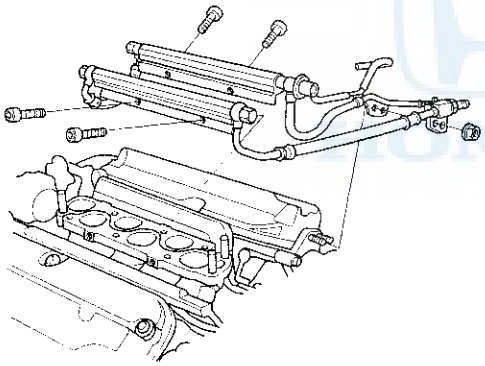

'00-01 models:

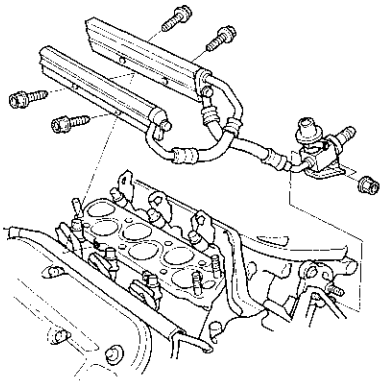

24. Remove the vacuum hoses (A) from the intake air bypass control thermal valve (B).

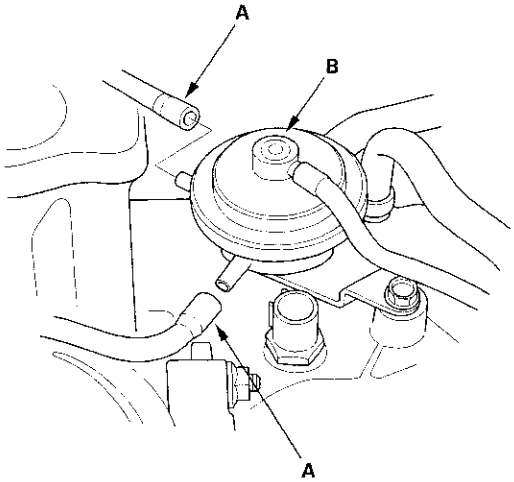

25. Remove the timing belt (see page 6-19).

26. Remove the upper radiator hose (A) and lower radiator hose (B).

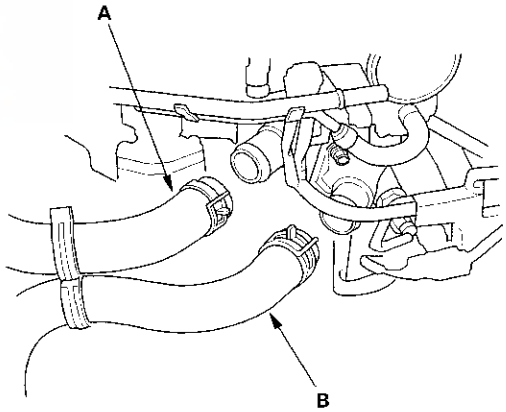

27. Remove the heater hoses.

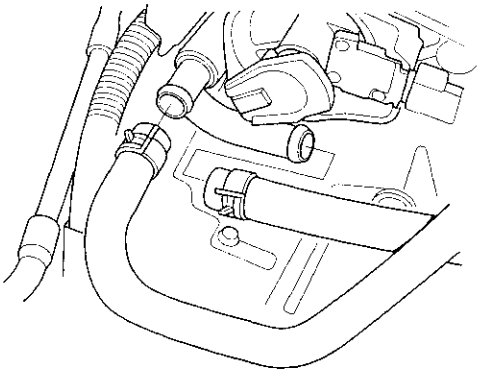

28. Remove the front and rear exhaust manifolds (see page 9-3).

29. Remove the water passage.

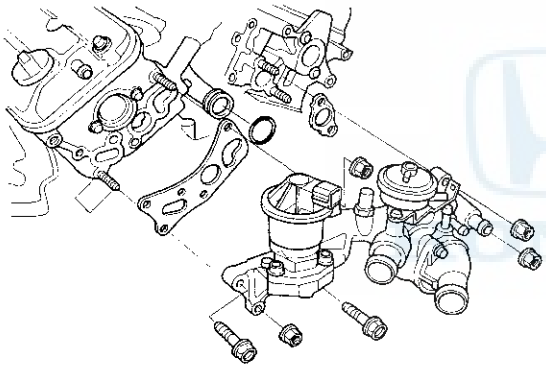

30. Remove the camshaft pulleys (A) and back covers (B).

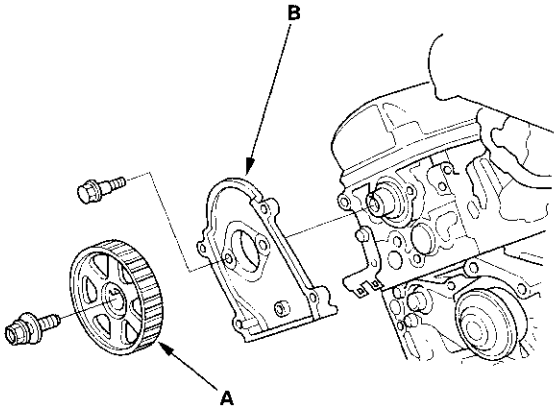

31. Remove the cylinder head covers.

32. Remove the cylinder head bolts. To prevent warpage, unscrew the bolts in sequence 1/3 turn at a time; repeat the sequence until all bolts are loosened.

CYLINDER HEAD BOLT LOOSENING SEQUENCE:

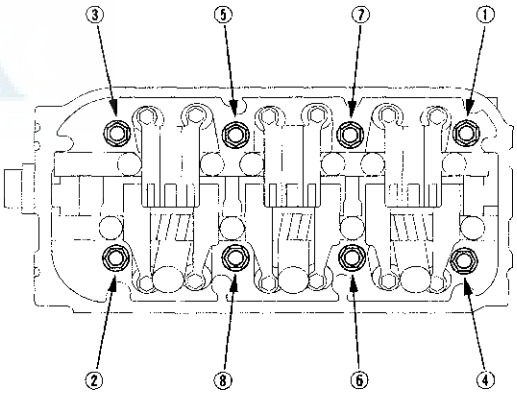

33. Remove the cylinder heads.

Cylinder Head Inspection for Warpage

NOTE: If camshaft-to-holder oil clearances (see page 6-40) are not within specifications, the cylinder head cannot be resurfaced.

If camshaft-to-holder oil clearances are within specifications, check the cylinder head for warpage. Measure along the edges, and three ways across the center.

- If warpage is less than 0.05 mm (0.002 in.), cylinder head resurfacing is not required.
- If warpage is between 0.05 mm (0.002 in.) and 0.2 mm (0.008 in.), resurface the cylinder head.
- Maximum resurface limit is 0.2 mm (0.008 in.) based on a height of 121 mm (4.76 in.).

Cylinder Head Height:
Standard (New): 120.95 – 121.05 mm (4.762 – 4.766 in.)

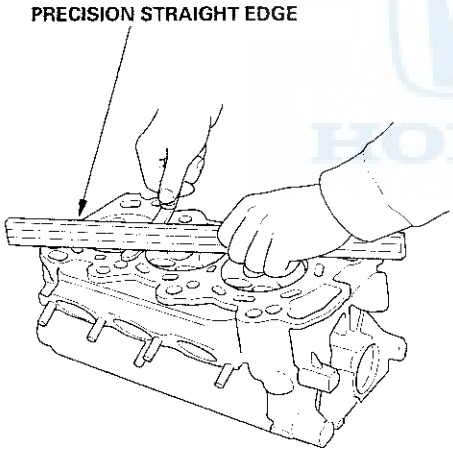

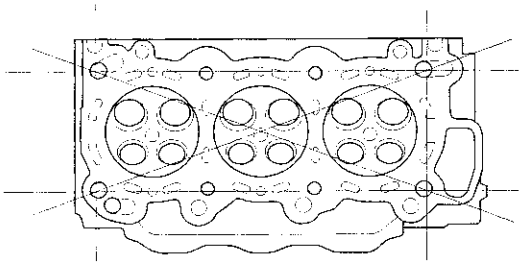

Rocker Arm Assembly Removal

1. Loosen the adjusting screws (A).

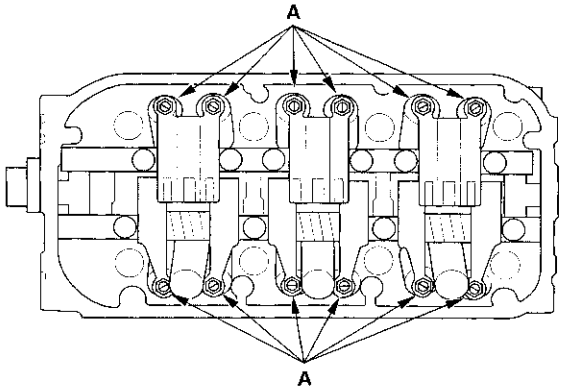

2. Remove the bolts and the rocker arm assembly.

   –1 Unscrew the rocker shaft mounting bolts 2 turns at a time, in a crisscross pattern, to prevent damaging the valves or rocker arm assembly.
   –2 When removing the rocker arm assembly, do not remove the rocker shaft mounting bolts. The bolts will keep the springs and the rocker arms on the shafts.

CAMSHAFT HOLDER BOLT LOOSENING SEQUENCE:

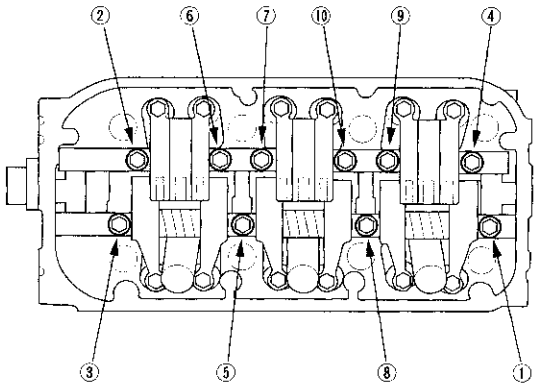

Rocker Arms and Shafts Disassembly/Reassembly

NOTE:
- Identify parts as they are removed so they can be reinstalled in their original locations.
- Inspect the rocker shafts and rocker arms (see page 6-38).
- Rocker arms must be installed in the same positions if reused.
- When removing or installing the rocker arm assembly, do not remove the rocker shaft mounting bolts. The bolts will keep the springs and rocker arms on the shaft.
- Bundle the rocker arms with rubber bands to keep them together as a set.
- Prior to reassembling, clean all the parts in solvent, dry them and apply lubricant to any contact points.

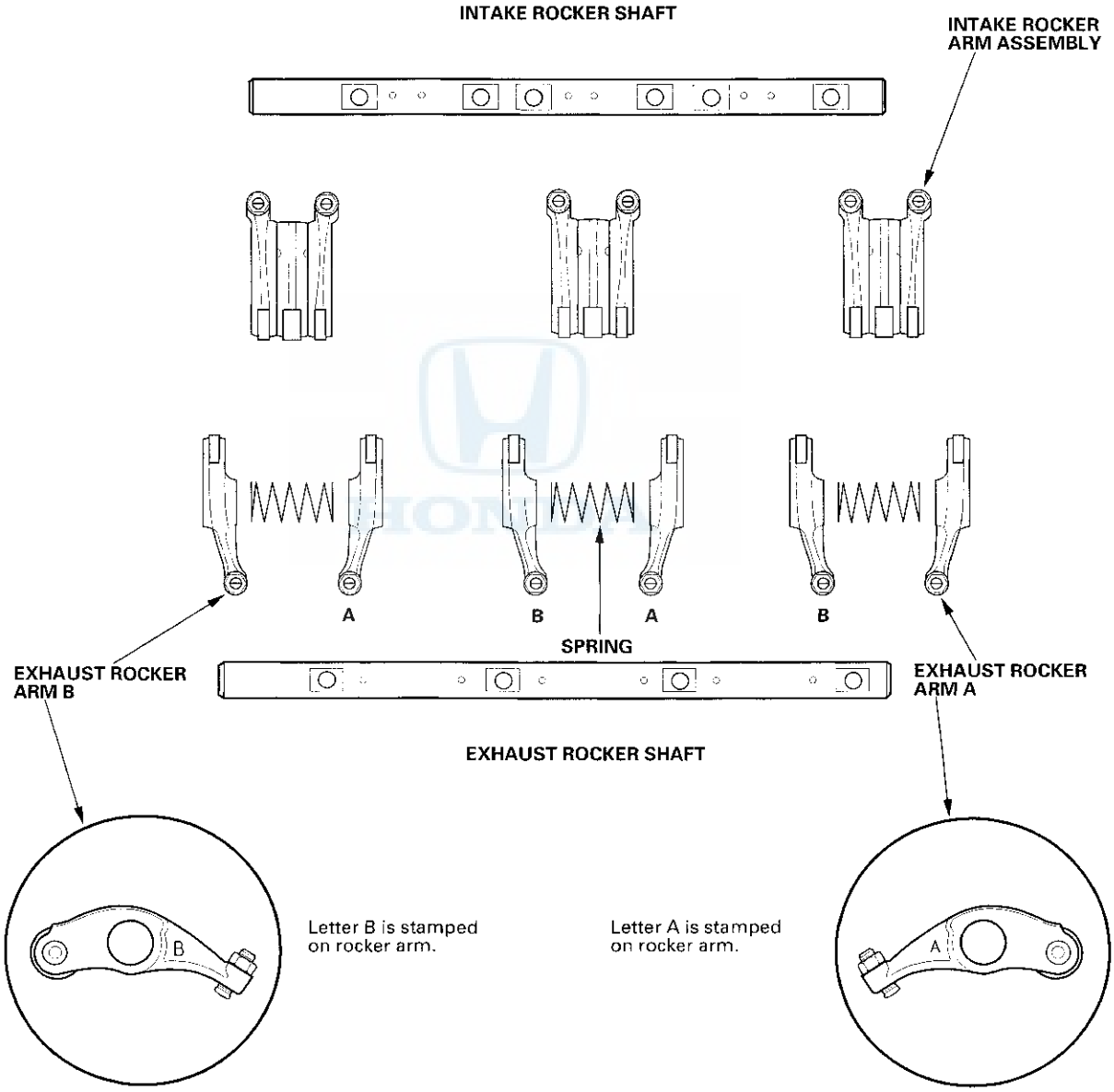

Rocker Arms and Shafts Inspection

Measure the intake rocker shaft and exhaust rocker shaft.

1. Measure the diameter of the shaft at the first rocker location.

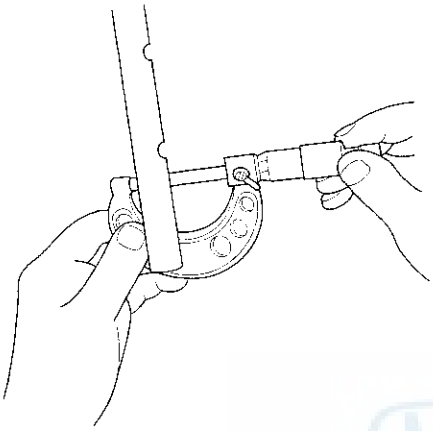

2. Zero the gauge (A) to the shaft diameter.

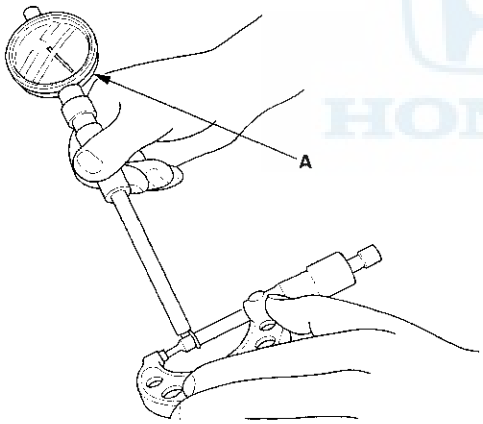

3. Measure the inside diameter of the rocker arm, and check it for an out-of-round condition.

Rocker Arm-to-Shaft Clearance:
Standard (New):

Intake:	**0.026 – 0.067 mm (0.0010 – 0.0026 in.)**
Service Limit:	**0.067 mm (0.0026 in.)**
Exhaust:	**0.026 – 0.077 mm (0.0010 – 0.0030 in.)**
Service Limit:	**0.077 mm (0.0030 in.)**

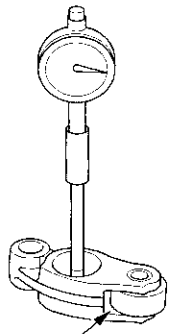

Inspect rocker arm face for wear.

4. Repeat for all rockers and both shafts. If the clearance is over the limit, replace the rocker shaft and all overtolerance rocker arms. If any intake rocker arm needs replacement, replace all 3 rocker arms in that set (primary, mid, and secondary).

VTEC Rocker Arms

5. Inspect the rocker arm pistons (A). Push them manually. If they do not move smoothly, replace the rocker arm assembly.

   NOTE:
   - Apply oil to the pistons when reassembling.
   - When reassembling the primary rocker arm (B), carefully apply air pressure to the oil passage of the rocker arm.

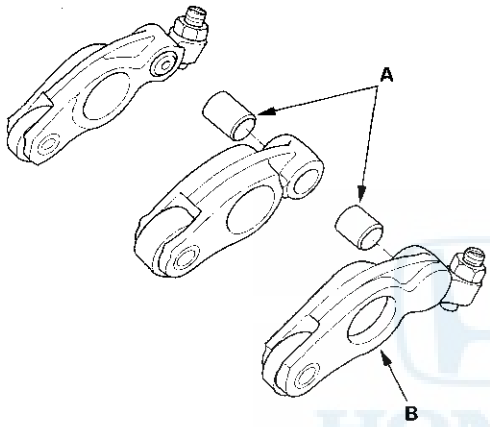

VTEC Lost Motion Assemblies Inspection

Push on the lost motion assembly (A) with your finger. If it does not move smoothly, replace it.

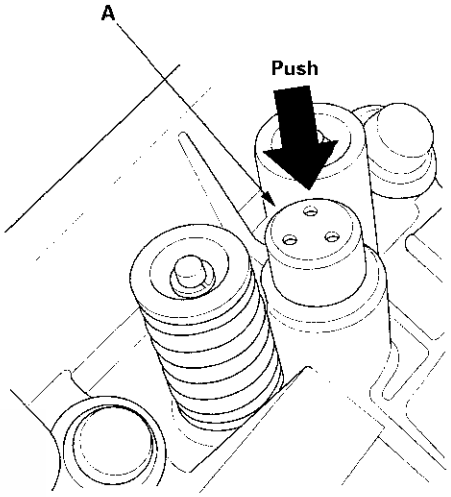

Camshaft Inspection

1. Remove the rocker arms.

2. Put the rocker shafts on the cylinder head, then tighten the bolts to the specified torque.

   Specified torque:
   8 X 1.25 mm
   24 N·m (2.4 kgf·m, 17 lbf·ft)
   Apply engine oil to the bolt threads and flange

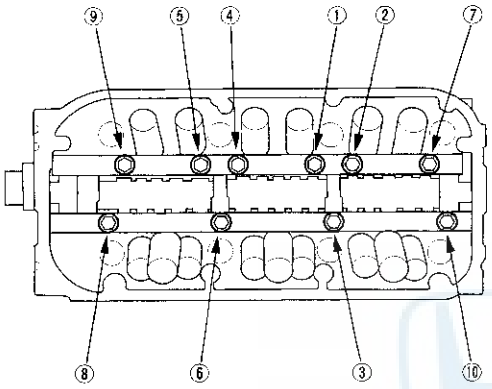

3. Seat the camshaft by pushing it toward the rear of the cylinder head.

4. Zero the dial indicator against the end of the camshaft. Push the camshaft back and forth and read the end play.

   Camshaft End Play:
   Standard (New): 0.05 – 0.20 mm (0.002 – 0.008 in.)
   Service Limit: 0.20 mm (0.008 in.)

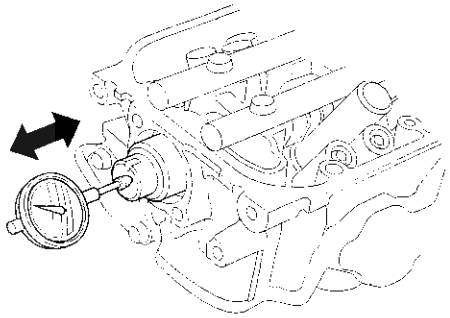

5. Remove the camshaft thrust cover (A), then pull out the camshaft (B).

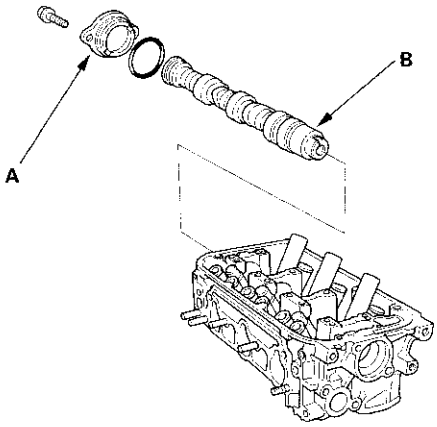

6. Wipe the camshaft clean, then inspect the lift ramps. Replace the camshaft if any lobes are pitted, scored or excessively worn.

7. Measure the diameter of each camshaft journal.

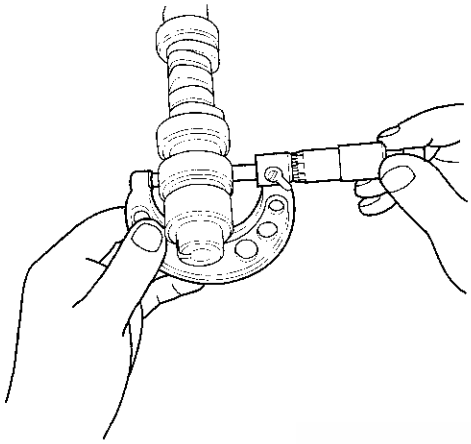

8. Zero the gauge to the journal diameter.

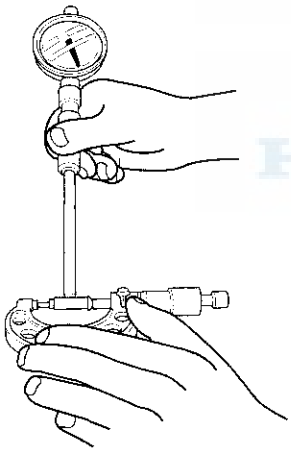

9. Clean the camshaft bearing surfaces in the cylinder head. Measure the inside diameter of each camshaft bearing surface, and check for an out-of-round condition.
   - If the camshaft-to-holder clearance is within limits, go to step 11.
   - If the camshaft-to-holder clearance is beyond the service limit and the camshaft has been replaced, replace the cylinder head.
   - If the camshaft-to-holder clearance is beyond the service limit and the camshaft has not been replaced, go to step 10.

Camshaft-to-Holder Oil Clearance:

Standard (New):	**0.050 – 0.089 mm (0.0020 – 0.0035 in.)**
Service Limit:	**0.15 mm (0.006 in.)**

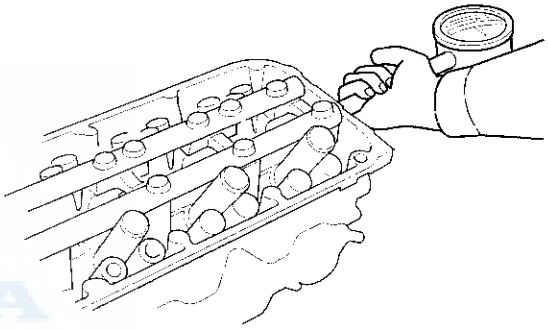

(cont'd)

Camshaft Inspection (cont'd)

10. Check total runout with the camshaft supported on V-blocks.

    - If the total runout of the camshaft is within the service limit, replace the cylinder head.
    - If the total runout is beyond the service limit, replace the camshaft and recheck the oil clearance. If the clearance is still out of tolerance, replace the cylinder head.

    Camshaft Total Runout:
    Standard (New): 0.03 mm (0.001 in.) max.
    Service Limit: 0.04 mm (0.002 in.)

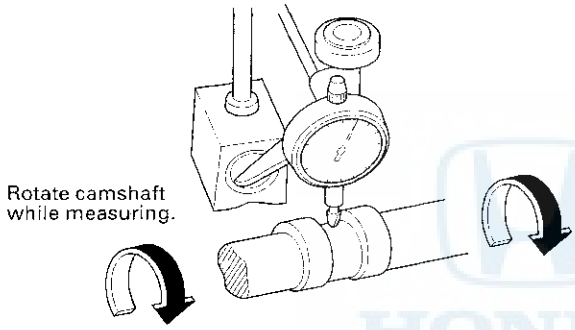

11. Measure cam lobe height.

Cam Lobe Height Standard (New):

	INTAKE	EXHAUST
PRI	34.615 mm (1.3628 in.)	36.076 mm (1.4203 in.)
MID	36.210 mm (1.4256 in.)	
SEC	31.188 mm (1.2279 in.)	

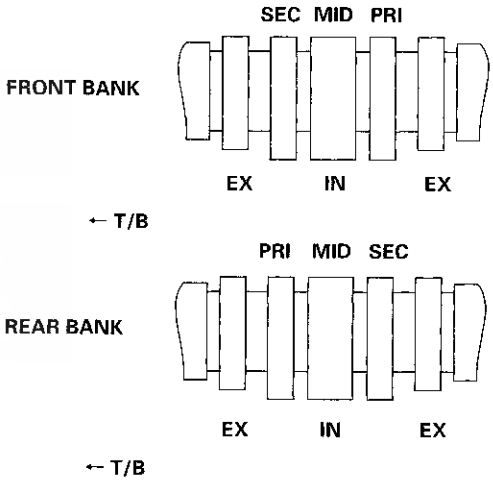

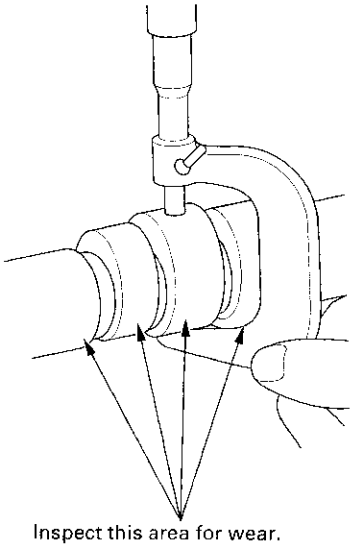

Valves, Springs and Valve Seals Removal

Special Tools Required
- Valve Spring Compressor Attachment 07757-PJ1010A
- Commercially available Valve Spring Compressor KD383 with No.32 jaws
- Commercially available Valve Guide Seal Remover KD3350

Identify the valves and valve springs as they are removed so that each item can be reinstalled in its original position.

1. Using an appropriate-sized socket (A) and plastic mallet (B), lightly tap the valve retainer to loosen the valve keepers.

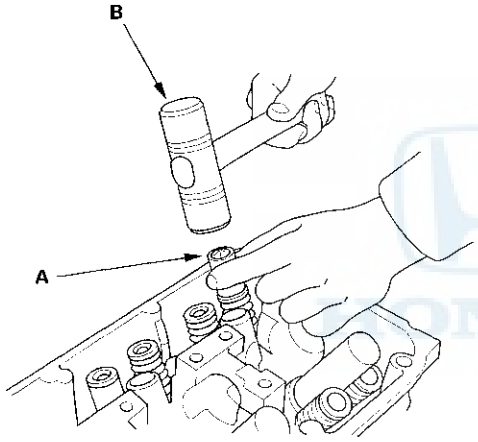

2. Install the valve spring compressor. Compress the spring and remove the valve keepers.

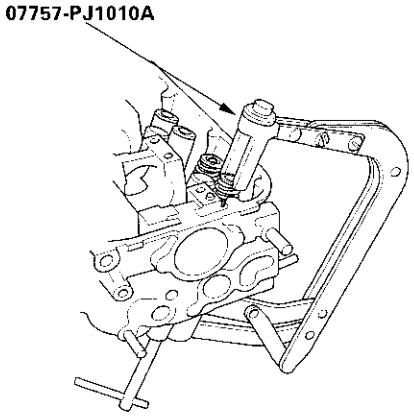

3. Install the valve guide seal remover (A).

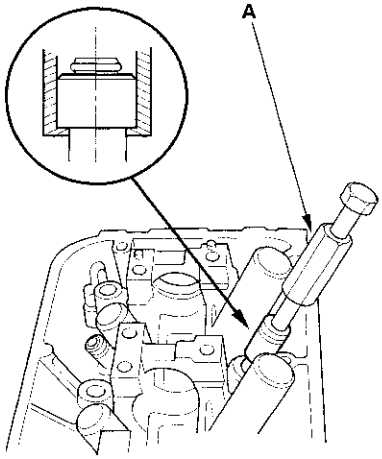

4. Remove the valve seal.

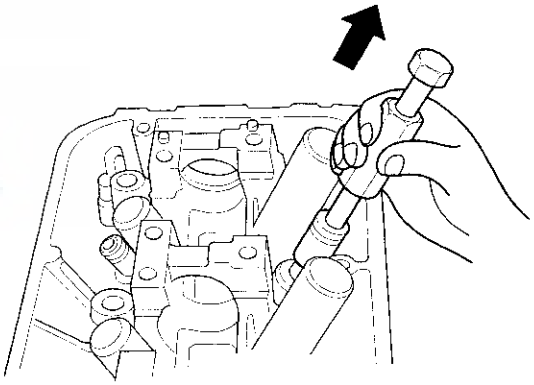

Valve Inspection

Measure the valve in these areas.

Intake Valve Dimensions

A Standard (New):	33.90 – 34.10 mm (1.335 – 1.343 in.)
B Standard (New):	114.85 – 115.15 mm (4.522 – 4.533 in.)
C Standard (New):	5.485 – 5.495 mm (0.2159 – 0.2163 in.)
C Service Limit:	5.455 mm (0.2148 in.)
D Standard (New):	0.85 – 1.15 mm (0.033 – 0.045 in.)
D Service Limit:	0.65 mm (0.026 in.)

Exhaust Valve Dimensions

A Standard (New):	28.90 – 29.10 mm (1.138 – 1.146 in.)
B Standard (New):	112.85 – 113.15 mm (4.443 – 4.455 in.)
C Standard (New):	5.450 – 5.460 mm (0.2146 – 0.2150 in.)
C Service Limit:	5.420 mm (0.2134 in)
D Standard (New):	1.05 – 1.35 mm (0.041 – 0.053 in.)
D Service Limit:	0.95 mm (0.037 in.)

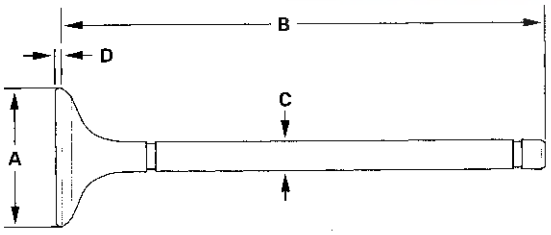

Valve Stem-to-Guide Clearance Inspection

1. Slide the valve out of its guide about 10 mm, then measure the guide-to-stem clearance with a dial indicator while rocking the stem in the direction of normal thrust (wobble method).
   - If the measurement exceeds the service limit, recheck it using a new valve.
   - If the measurement is now within the service limit, reassemble using a new valve.
   - If the measurement with a new valve still exceeds the service limit, go to step 2.

   Intake Valve Stem-to-Guide Clearance:

Standard (New):	0.04 – 0.09 mm (0.002 – 0.004 in.)
Service Limit:	0.16 mm (0.006 in.)

   Exhaust Valve Stem-to-Guide Clearance:

Standard (New):	0.11 – 0.16 mm (0.004 – 0.006 in.)
Service Limit:	0.24 mm (0.009 in.)

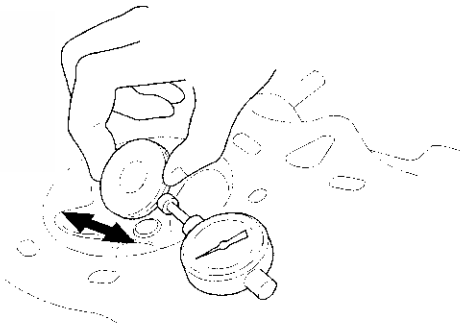

2. Subtract the O.D. of the valve stem, measured with a micrometer, from the I.D. of the valve guide, measured with an inside micrometer or ball gauge. Take the measurements in three places along the valve stem and three places inside the valve guide. The difference between the largest guide measurement and the smallest stem measurement should not exceed the service limit.

   Intake Valve Stem-to-Guide Clearance:

Standard (New):	0.020 – 0.045 mm (0.0008 – 0.0018 in.)
Service Limit:	0.08 mm (0.003 in.)

   Exhaust Valve Stem-to-Guide Clearance:

Standard (New):	0.055 – 0.080 mm (0.0022 – 0.0031 in.)
Service Limit:	0.12 mm (0.005 in.)

Valve Guide Replacement

Special Tools Required
- Valve Guide Driver, 5.5 mm 07742-0010100
- Valve Guide Reamer, 5.5 mm 07HAH-PJ7010B

1. As illustrated below, use a commercially available air-impact valve guide driver (A) modified to fit the diameter of the valve guides. In most cases, the same procedure can be done using the special tool and a conventional hammer.

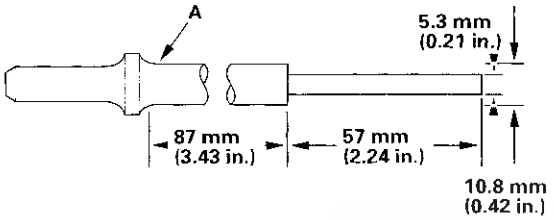

2. Select the proper replacement guides and chill them in the freezer section of a refrigerator for about an hour.

3. Use a hot plate or oven to evenly heat the cylinder head to 300°F (150°C). Monitor the temperature with a cooking thermometer. Do not get the head hotter than 300°F (150°C); Excessive heat may loosen the valve seats.

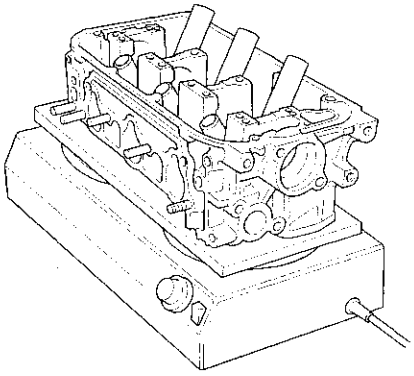

4. Working from the camshaft side, use the driver and an air hammer to drive the guide about 2 mm (0.1 in.) towards the combustion chamber. This will knock off some of the carbon and make removal easier. Hold the air hammer directly in line with the valve guide to prevent damaging the driver. Wear safety goggles or a face shield.

5. Turn the head over and drive the guide out toward the camshaft side of head.

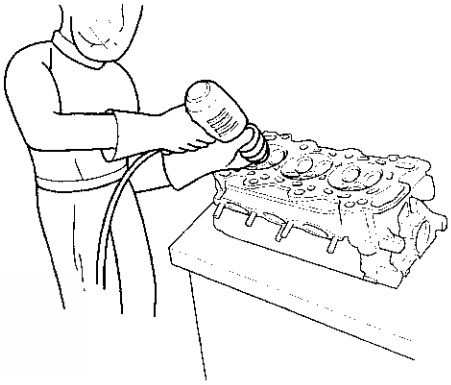

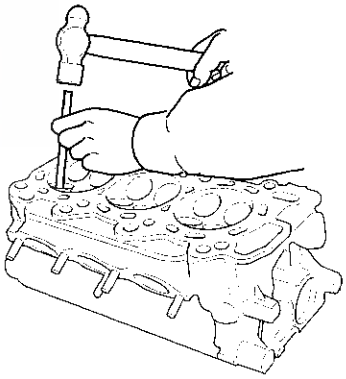

6. If a valve guide won't move, drill it out with a 8 mm (5/16 in.) bit, then try again. Drill guides only in extreme cases; you could damage the cylinder head if the guide breaks.

7. Remove the new guide(s) from the freezer, one at a time, as you need them.

(cont'd)

Valve Guide Replacement (cont'd)

8. Apply a thin coat of clean engine oil to the outside of the new valve guide. Install the guide from the camshaft side of the head; use the special tool to drive the guide in to the specified installed height (A) of the guide (B). If you have all 12 guides to do, you may have to reheat the head.

   Valve Guide Installed Height:
   Intake: 21.20 – 22.20 mm (0.835 – 0.874 in.)
   Exhaust: 20.63 – 21.63 mm (0.812 – 0.852 in.)

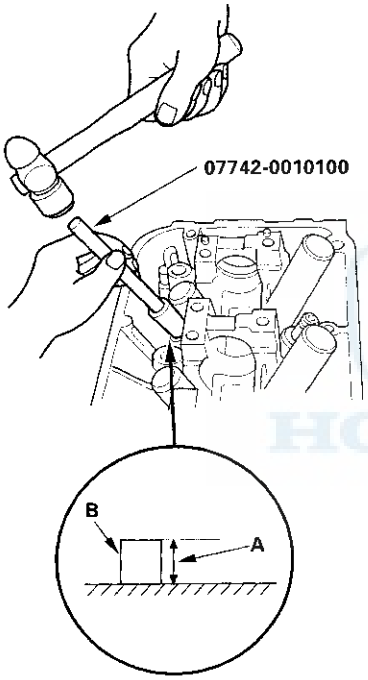

9. Coat both the reamer and the valve guide with cutting oil.

10. Rotate the reamer clockwise the full length of the valve guide bore.

11. Continue to rotate the reamer clockwise while removing it from the bore.

12. Thoroughly wash the guide in detergent and water to remove any cutting residue.

13. Check the clearance with a valve (see page 6-44). Verify that the valve slides in the intake and exhaust valve guides without exerting pressure.

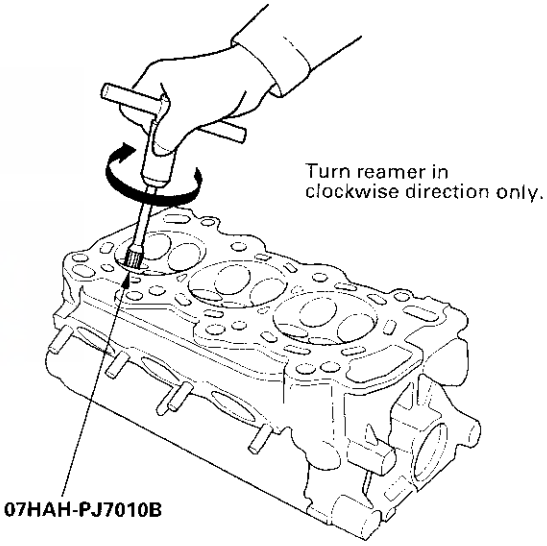

Valve Seat Reconditioning

If the valve guides are worn (see page 6-44), replace them (see page 6-45)before cutting the valve seats.

1. Renew the valve seats in the cylinder head using a valve seat cutter.

   –1 Carefully cut a 45° seat, removing only enough material to ensure a smooth and concentric seat.
   –2 Bevel the upper edge of the seat with the 30° cutter and the lower edge of the seat with the 60° cutter. Check the width of the seat and adjust accordingly.
   –3 Make one more very light pass with the 45° cutter to remove any possible burrs caused by the other cutters.

   Valve Seat Width:
   Standard (New): 1.25 – 1.55 mm (0.049 – 0.061 in.)
   Service Limit: 2.00 mm (0.079 in.)

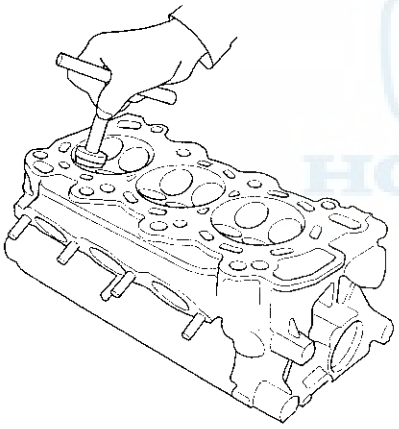

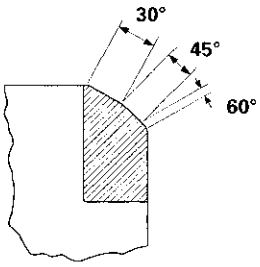

2. After resurfacing the seat, inspect it for even valve seating: Apply Prussian Blue compound (A) to the valve face. Insert the valve in its original location in the head, then lift it and snap it closed against the seat several times.

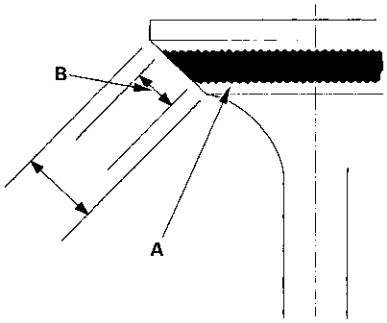

3. The actual valve seating surface (B), as shown by the blue compound, should be centered on the seat.

   - If it is too high (closer to the valve stem), you must make a second cut with the 60° cutter to move it down, then one more cut with the 45° cutter to restore seat width.
   - If it is too low (closer to the valve edge), you must make a second cut with the 30° cutter to move it up, then one more cut with the 45° cutter to restore seat width.

   NOTE: The final cut should always be made with the 45° cutter.

(cont'd)

Valve Seat Reconditioning (cont'd)

4. Insert the intake and exhaust valves in the head and measure the valve stem installed height (A).

   Intake Valve Stem Installed Height:
   Standard (New): 46.75 – 47.55 mm (1.841 – 1.872 in.)
   Service Limit: 47.80 mm (1.882 in.)

   Exhaust Valve Stem Installed Height:
   Standard (New): 46.68 – 47.48 mm (1.838 – 1.869 in.)
   Service Limit: 47.73 mm (1.879 in.)

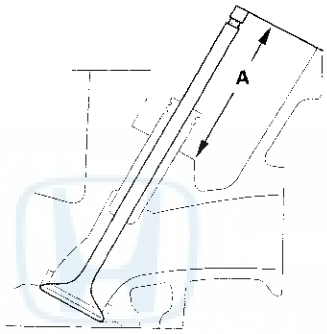

5. If the valve stem installed height is over the service limit, replace the valve and recheck. If it is still over the service limit, replace the cylinder head; the valve seat in the head is too deep.

Valves, Springs and Valve Seals Installation

Special Tools Required
- Valve Spring Compressor Attachment 07757-PJ1010A
- Commercially available Valve Spring Compressor KD383 with No.32 jaws, commercially available
- Commercially available Valve Guide Seal Remover KD3372, commercially available

1. Coat the valve stems with engine oil. Install the valves in the valve guides.

2. Check that the valves move up and down smoothly.

3. Install the spring seats on the cylinder head.

4. Install the new valve seals (A) using the valve guide seal installer (B).

   NOTE: Exhaust valve seals (C) have a black spring (D) and intake valve seals (E) have a white spring (F); they are not interchangeable.

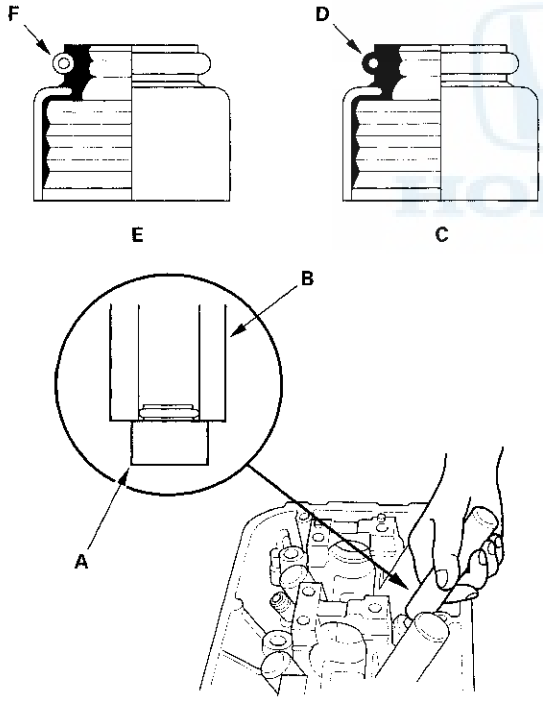

5. Install the valve spring and valve retainer. Place the end of the valve spring with closely wound coils toward the cylinder head.

6. Install the valve spring compressor. Compress the spring and install the valve keepers.

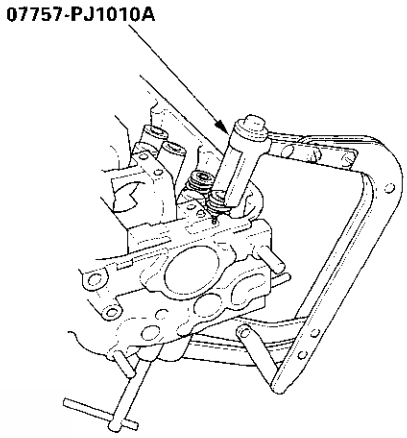

7. Lightly tap the end of each valve stem 2 or 3 times with a plastic mallet (A) to ensure proper seating of the valve and valve keepers. Tap the valve stem only along its axis so you do not bend the stem.

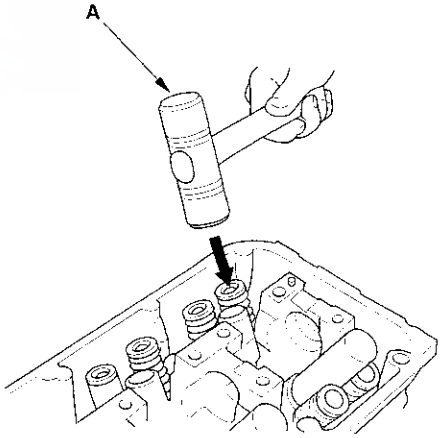

Camshaft/Rocker Arms, Camshaft Seal, and Pulley Installation

1. Apply a light coat of oil around the camshaft oil seal.

2. Gently tap the new camshaft oil seal (A) into the cylinder head.
   –1 Tap the camshaft oil seal in squarely.
   –2 Tap the oil seal into the cylinder head about 0.5 – 1.5 mm (0.02 – 0.06 in.) from the surface of the cylinder head.

3. Insert the camshaft (B) into the cylinder head, then install the camshaft thrust cover (C). Always use a new O-ring (D).

4. Check that the oil seal lips are not distorted.

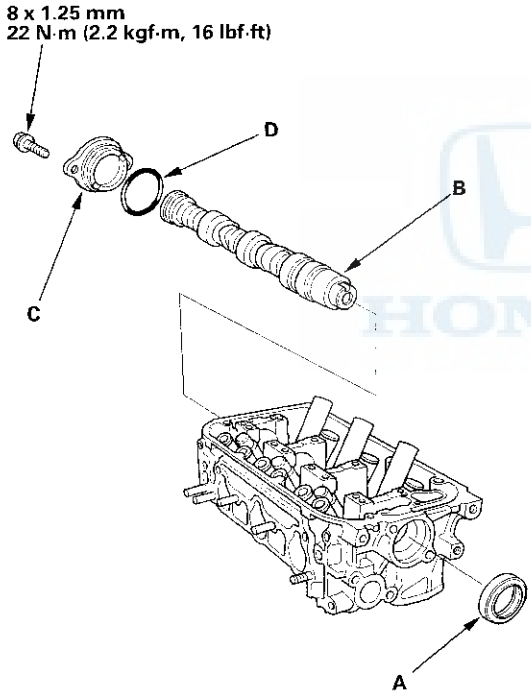

5. Loosen the valve adjusting screws.

6. Set the rocker arm assembly in place and loosely install the bolts. Make sure that the rocker arms are properly positioned on the valve stems.

7. Tighten each bolt 2 turns at a time in the sequence shown below to ensure that the rockers do not bind on the valves.

   Specified torque:
   8 x 1.25 mm
   24 N·m (2.4 kgf·m, 17 lbf·ft)
   Apply engine oil to the bolt threads and flange

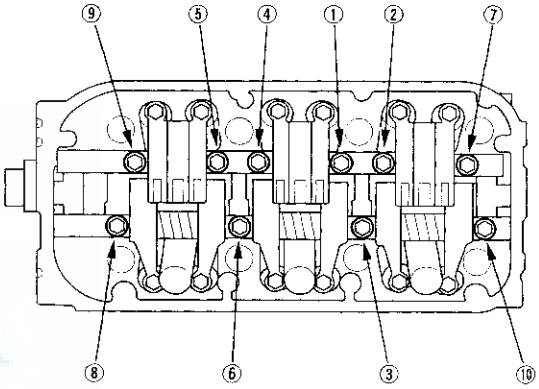

8. Install the injector base (A). Always use a new gasket (B).

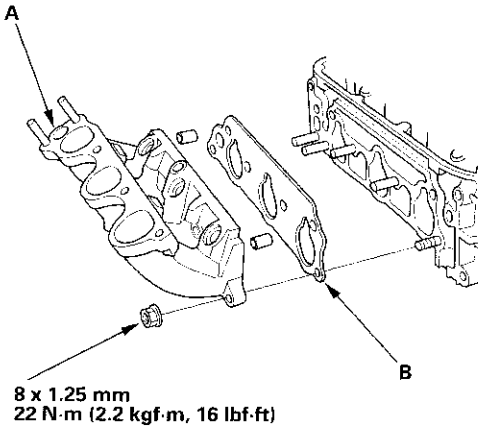

9. Install the back cover (A), then install the camshaft pulley (B).

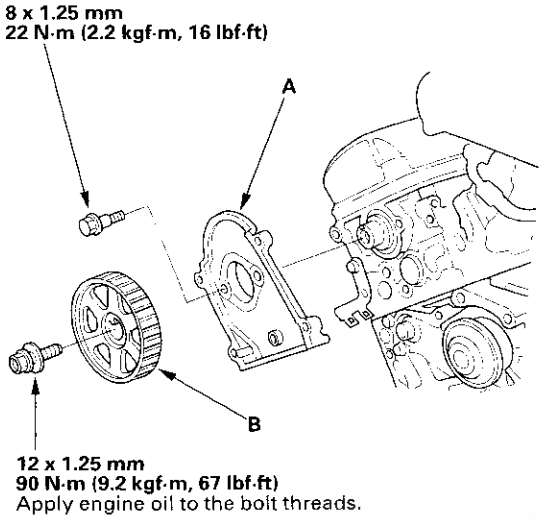

Cylinder Head Installation

Install the cylinder heads in the reverse order of removal:

1. Clean the cylinder heads and block surface.
2. Clean and install the oil control orifices (A) with new O-rings (B).
3. Install the dowel pins (C) and new cylinder head gaskets (D).

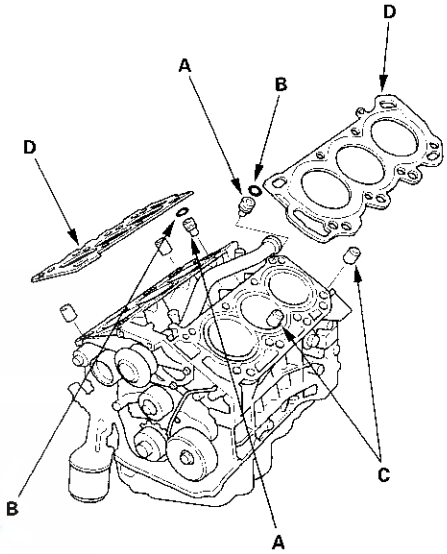

(cont'd)

Cylinder Head Installation (cont'd)

4. Clean the timing belt drive pulley.

5. Set the timing belt drive pulley to TDC by aligning the TDC mark (A) on the tooth of the timing belt drive pulley with the pointer (B) on the oil pump.

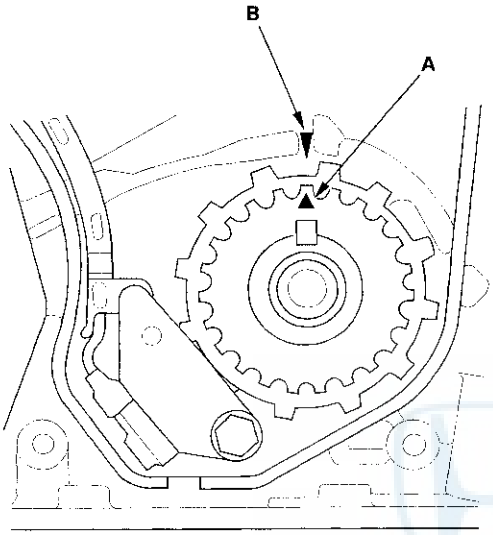

6. Clean the camshaft pulleys. Set the camshaft pulleys to TDC by aligning the TDC marks (A) on the camshaft pulleys with the pointers (B) on the back covers.

FRONT:

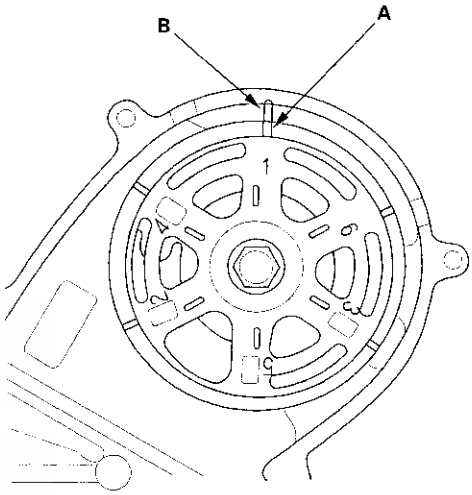

REAR:

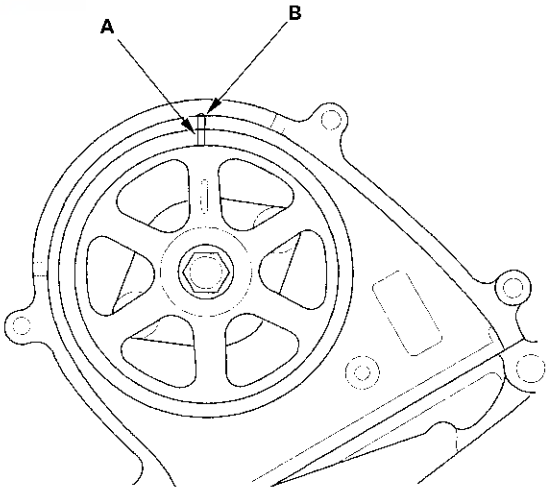

7. Apply clean engine oil to the threads and flange of the cylinder head bolts.

8. Tighten the cylinder head bolts sequentially in 3 steps. Perform each step twice.

   1st step torque: 39 N·m (4.0 kgf·m, 29 lbf·ft)
   2nd step torque: 69 N·m (7.0 kgf·m, 51 lbf·ft)
   3rd step torque: 98.1 N·m (10.0 kgf·m, 72.3 lbf·ft)

   Use a beam-type torque wrench. When using a preset-type torque wrench, be sure to tighten slowly and not to overtighten.
   If a bolt makes any noise while you are torquing it, loosen the bolt, and retighten it from the 1st step.

   CYLINDER HEAD BOLTS TORQUE SEQUENCE:

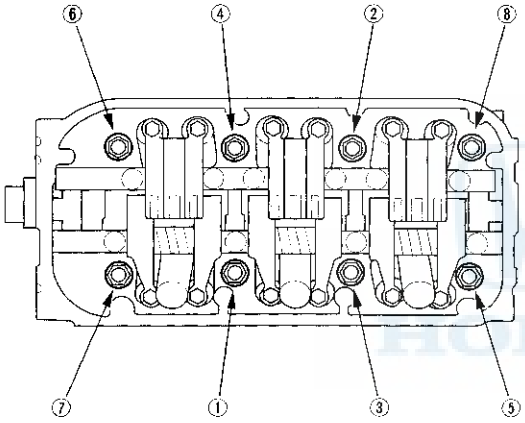

9. Install the exhaust manifold and tighten the nuts in a crisscross pattern in 2 or 3 steps, beginning with the inner nut (see page 9-3). Always use a new exhaust manifold gasket.

10. Install exhaust pipe A and bracket, then install the cover (see page 9-4).

11. Install the timing belt (see page 6-22).

12. Adjust the valve clearance (see page 6-13).

13. Install the cylinder head covers.

    NOTE:
    - Before installing the cylinder head cover, clean the cylinder head contacting surfaces with a shop towel.
    - Take care not to damage the spark plug seals when installing the cylinder head cover.
    - Visually check the spark plug seals for damage.
    - Replace any washer that is damaged or deteriorated.

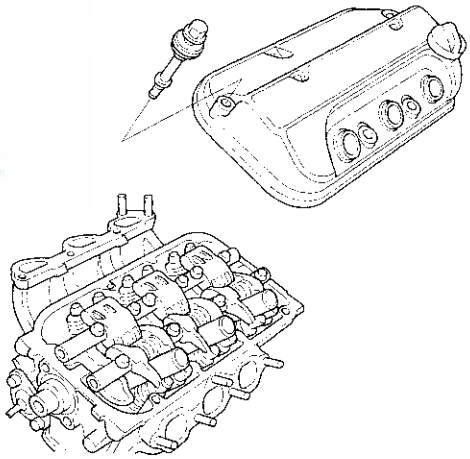

(cont'd)

Cylinder Head Installation (cont'd)

14. Tighten the nuts in 2 or 3 steps. In the final step, tighten all nuts, in sequence, to 12 N·m (1.2 kgf·m, 8.7 lbf·ft).

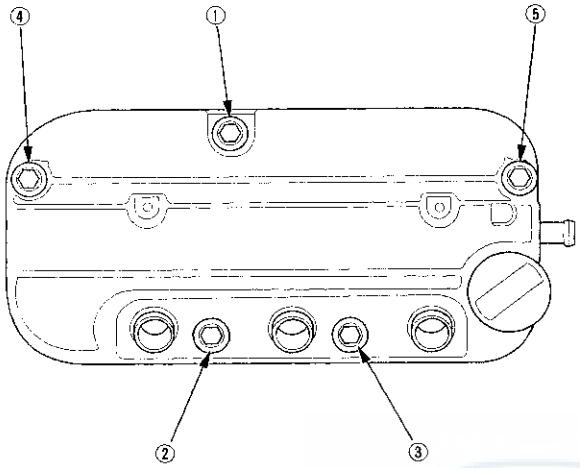

15. Install the water passage (A). Always use a new O-ring (B) and new gaskets (C).

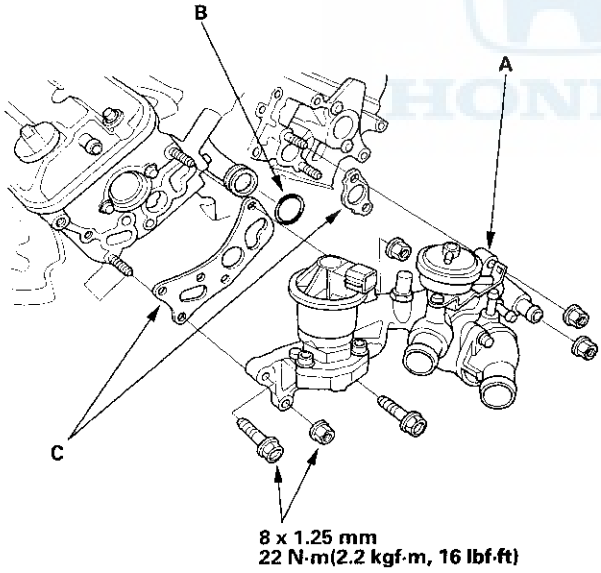

16. Install the intake manifold. Tighten the bolts and nuts sequentially in 2 or 3 steps. Always use a new intake manifold gasket.

Specified torque:
8 x 1.25 mm
22 N·m (2.2 kgf·m, 16 lbf·ft)

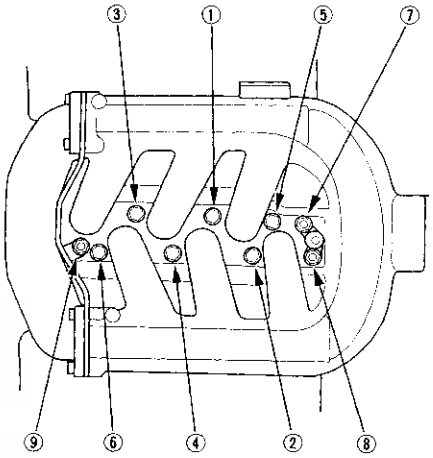

17. After installation, check that all tubes, hoses and connectors are installed correctly.

18. Enter the anti-theft code for the radio, then enter the customer's radio station presets.

TDC Sensor Replacement

1. Set the No.1 piston at TDC (see page 6-22).

2. Remove the upper covers.

3. To hold the timing belt adjuster in its current position, thread in the battery clamp bolt hand-tight (see step 14 on page 6-21).

4. Loosen the idler pulley bolt about 5 or 6 turns, then remove the timing belt from the front camshaft pulley (see step 16 on page 6-22).

5. Remove the front camshaft pulley.

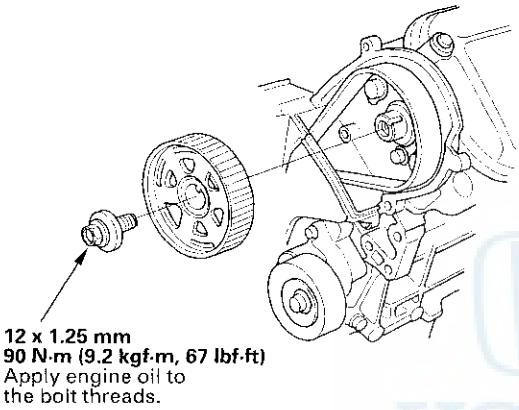

6. Disconnect the TDC 1/TDC 2 sensor connector, then remove the back cover.

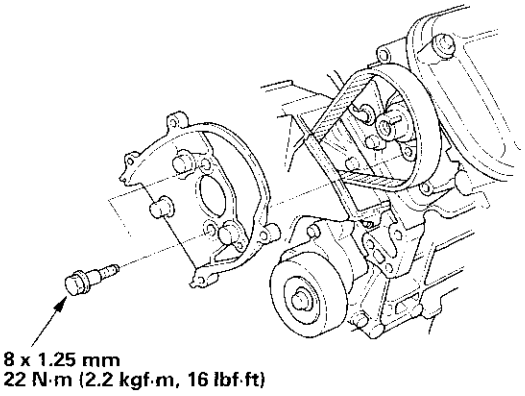

7. Remove the TDC 1/TDC 2 sensor from the back cover.

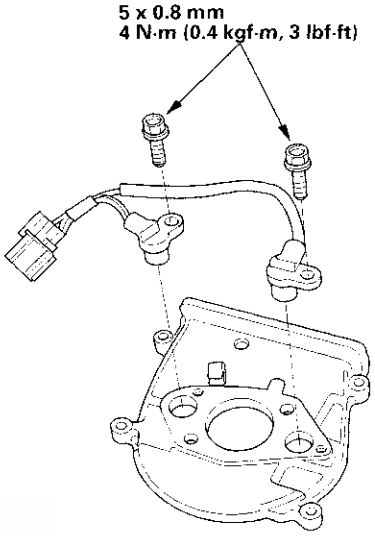

8. Install the TDC 1/TDC 2 sensor in reverse order of removal. Reinstall the timing belt and other removed components (see page 6-22).

CKP Sensor Replacement

1. Move the auto-tensioner to remove tension from the alternator belt, then remove the alternator belt (see step 5 on page 6-19).

2. Loosen the adjusting bolt, locknut and mounting bolt, then remove the power steering (P/S) pump belt (see step 6 on page 6-20).

3. Remove the dipstick and tube (see step 9 on page 6-20).

4. Remove the crankshaft pulley (see step 10 on page 6-20).

5. Remove the upper and lower covers (see step 12 on page 6-21).

6. Remove the CKP sensor from the oil pump.

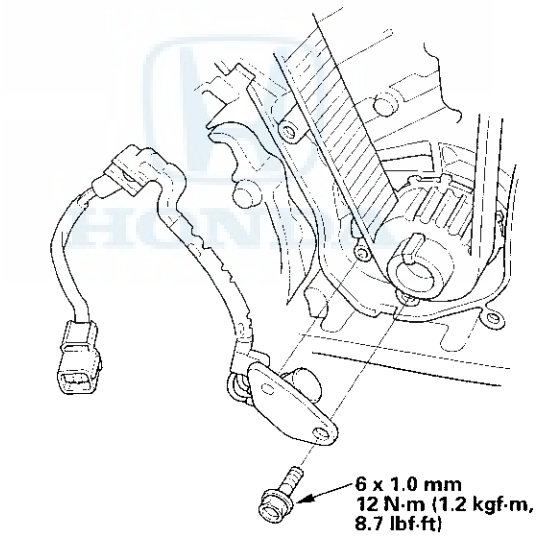

7. Install the CKP sensor in the reverse order of removal.

Engine Mechanical

Engine Block

Engine Block

Special Tools

Ref. No.	Tool Number	Description	Qty
①	07LAD-PT3010A	Oil Seal Driver	1
②	07VAD-P8A010A	Oil Seal Driver Attachment, 80 mm I.D.	1
③	07749-0010000	Driver	1

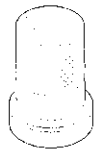

①

②

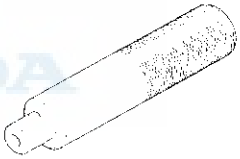

③

Component Location Index

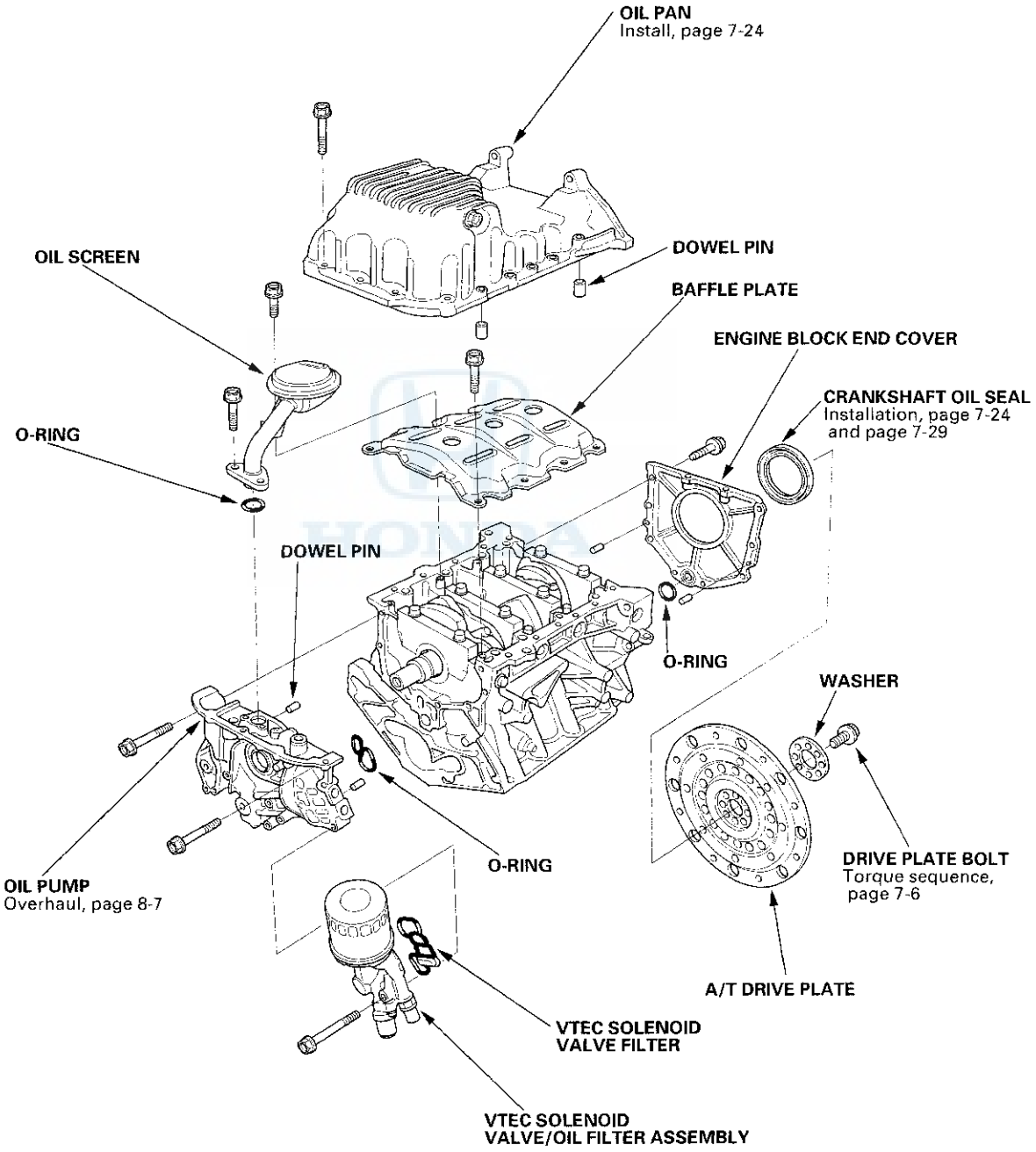

(cont'd)

Component Location Index (cont'd)

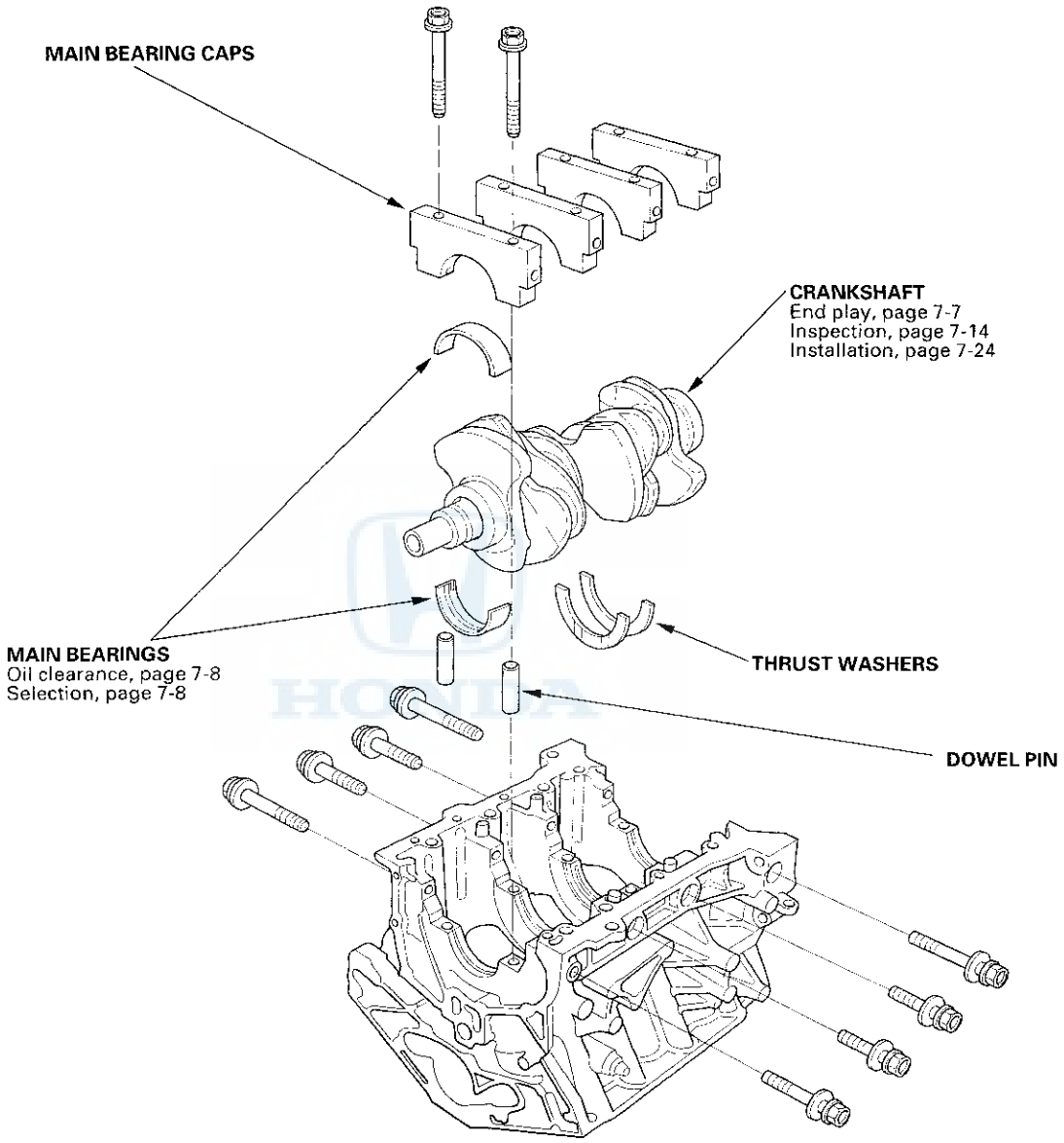

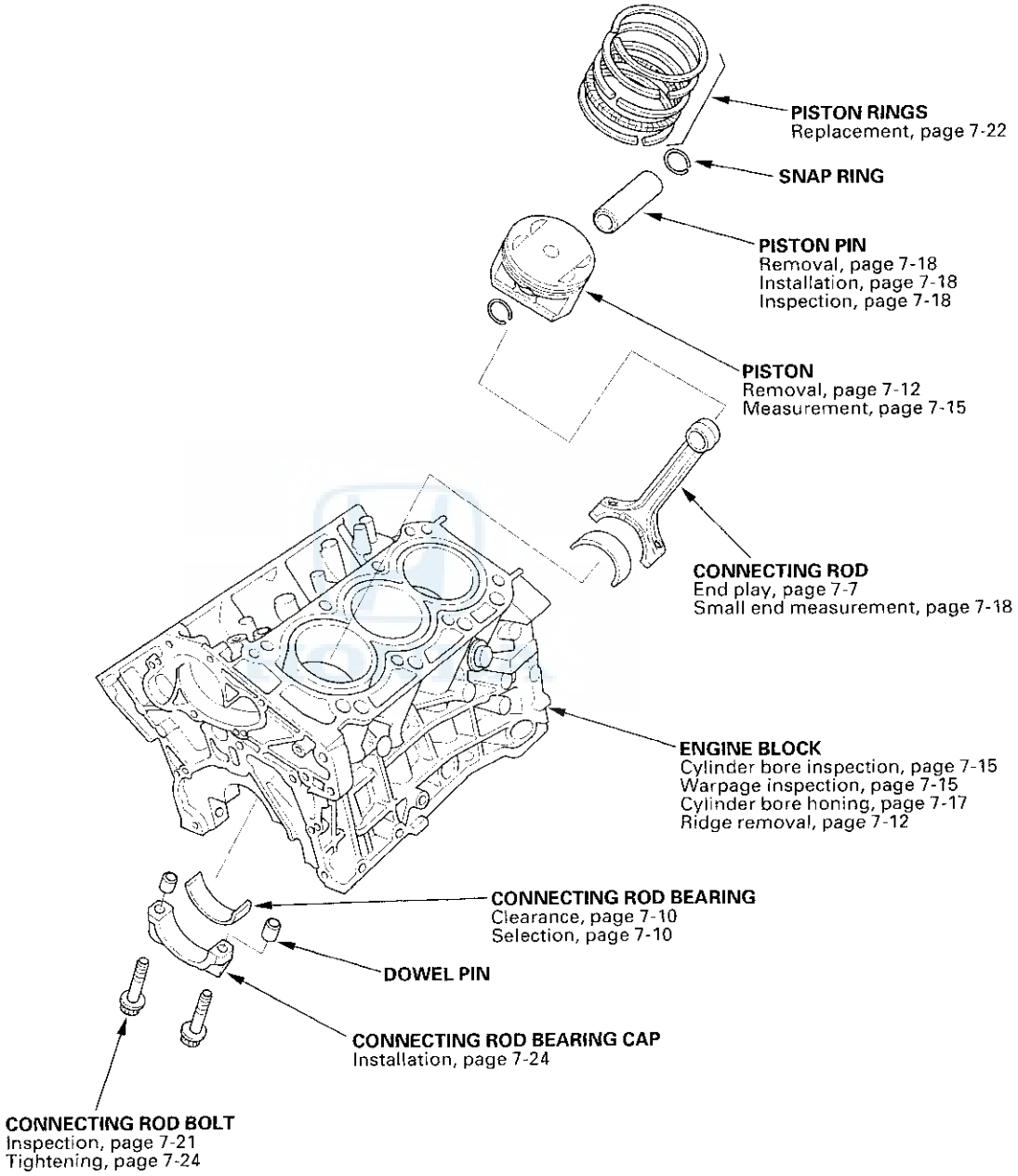
PISTON RINGS
Replacement, page 7-22
SNAP RING
PISTON PIN
Removal, page 7-18
Installation, page 7-18
Inspection, page 7-18
PISTON
Removal, page 7-12
Measurement, page 7-15
CONNECTING ROD
End play, page 7-7
Small end measurement, page 7-18
ENGINE BLOCK
Cylinder bore inspection, page 7-15
Warpage inspection, page 7-15
Cylinder bore honing, page 7-17
Ridge removal, page 7-12
CONNECTING ROD BEARING
Clearance, page 7-10
Selection, page 7-10
DOWEL PIN
CONNECTING ROD BEARING CAP
Installation, page 7-24
CONNECTING ROD BOLT
Inspection, page 7-21
Tightening, page 7-24

Drive Plate Removal and Installation

Remove the 8 drive plate bolts, then separate the drive plate from the crankshaft flange. After installation, tighten the bolts in the sequence shown.

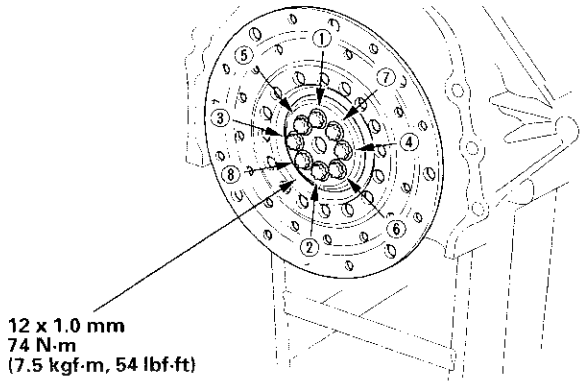

Connecting Rod and Crankshaft End Play Inspection

1. Measure the connecting rod end play with a feeler gauge (A) between the connecting rod (B) and crankshaft (C).

   Connecting Rod End Play:
   Standard (New): 0.15 – 0.35 mm (0.006 – 0.014 in.)
   Service Limit: 0.45 mm (0.018 in.)

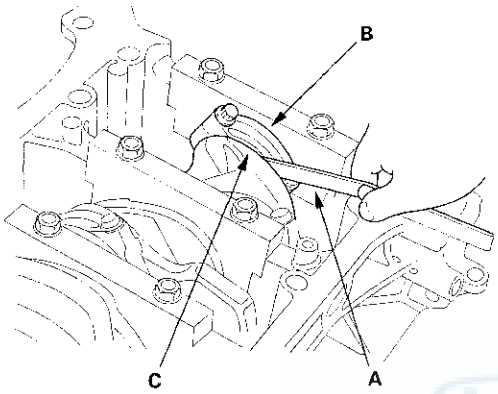

2. If the connecting rod end play is out-of-tolerance, install a new connecting rod, and recheck. If it still out-of-tolerance, replace the crankshaft (see page 7-12).

3. Push the crankshaft firmly away from the dial indicator, and zero the dial against the end of the crankshaft. Then pull the crankshaft firmly back toward the indicator; dial reading should not exceed the service limit.

   Crankshaft End Play:
   Standard (New): 0.10 – 0.35 mm (0.004 – 0.014 in.)
   Service Limit: 0.45 mm (0.018 in.)

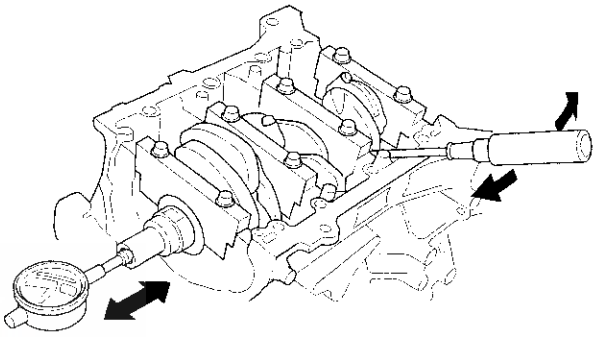

4. If end play is excessive, inspect the thrust washers and the thrust surface on the crankshaft. Replace parts as necessary. Thrust washer thickness is fixed and must not be changed either by grinding or shimming.

Crankshaft Main Bearing Replacement

Main Bearing Clearance Inspection

1. To check main bearing-to-journal oil clearance, remove the main caps and bearing halves.

2. Clean each main journal and bearing half with a clean shop towel.

3. Place one strip of plastigage across each main journal.

   NOTE: If the engine is still in the car when you bolt the main cap down to check the clearance, the weight of the crankshaft and drive plate will flatten the plastigage further than just the torque on the cap bolt and give you an incorrect reading. For an accurate reading, support the crank with a jack under the counterweights, and check only 1 bearing at a time.

4. Reinstall the bearings and caps, then torque the bolts (see page 7-24). Do not rotate the crankshaft.

5. Remove the caps and bearing halves, and measure the widest part of the plastigage.

   Main Bearing-to-Journal Oil Clearance:
   Standard (New): 0.020 – 0.044 mm
   (0.0008 – 0.0017 in.)
   Service Limit: 0.050 mm (0.0020 in.)

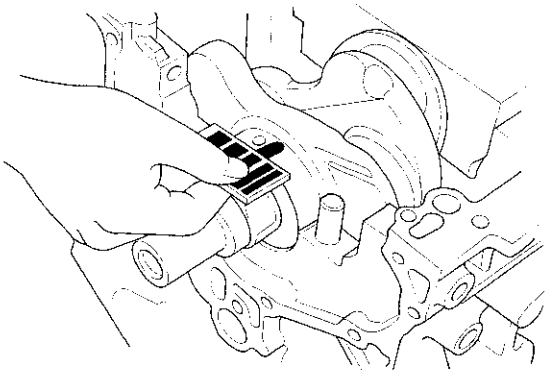

6. If the plastigage measures too wide or too narrow, (remove the engine if it's still in the car), remove the crankshaft, and remove the upper half of the bearing. Install a new, complete bearing with the same color code, and recheck the clearance. Do not file, shim, or scrape the bearings or the caps to adjust clearance.

7. If the plastigage shows the clearance is still incorrect, try the next larger or smaller bearing (the color listed above or below that one), and check again. If the proper clearance cannot be obtained by using the appropriate larger or smaller bearings, replace the crankshaft and start over.

Main Bearing Selection

Crankshaft Bore Code Location

1. Letters or Bars have been stamped on the end of the block as a code for the size of each of the 4 main journal bores.

   If you cannot read the codes because of an accumulation of dirt and dust, do not scrub them with a wire brush or scraper. Clean them only with solvent or detergent.

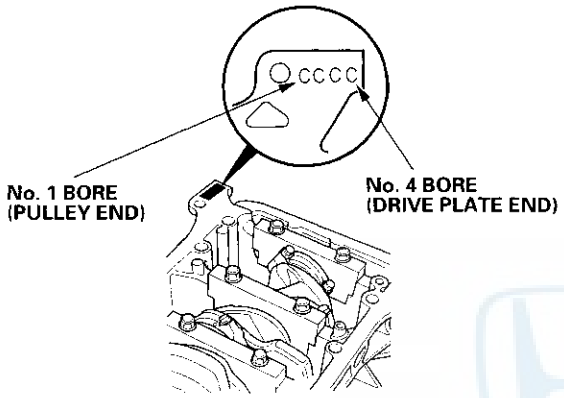

Main Journal Code Locations

2. Number or bars have been stamped on the crankshaft No. 1 web as a code for the main journal sizes.

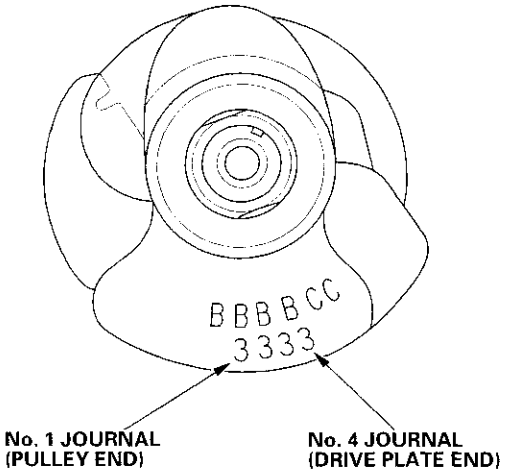

3. Use the crankshaft bore codes and journal codes to select the appropriate main bearings from the table.

Smaller main Journal ↓	Larger crank bore → A or I	B or II	C or III	D or IIII
	Smaller bearing (Thicker) ↓			
1 or I	Red/ Pink	Pink	Pink/ Yellow	Yellow
2 or II	Pink	Pink/ Yellow	Yellow	Yellow/ Green
3 or III	Pink/ Yellow	Yellow	Yellow/ Green	Green
4 or IIII	Yellow	Yellow/ Green	Green	Green/ Brown
5 or IIIII	Yellow/ Green	Green	Green/ Brown	Brown
6 or IIIIII	Green	Green/ Brown	Brown	Brown/ Black

Smaller main Journal ↓ Smaller bearing (Thicker) ↓

NOTE:
- **When using bearing halves of different colors, it does not matter which color is used in the top or bottom.**
- **Color code is on the dege of the bearing.**

Connecting Rod Bearing Replacement

Rod Bearing Clearance Inspection

1. Remove the connecting rod cap and bearing half.
2. Clean the crankshaft rod journal and bearing half with a clean shop towel.
3. Place a strip of plastigage across the rod journal.
4. Reinstall the bearing half and cap, and torque the bolts (see page 7-24). Do not rotate the crankshaft.
5. Remove the rod cap and bearing half and measure the widest part of the plastigage.

   Connecting Rod Bearing-to-Journal Oil Clearance:
   Standard (New): 0.020 – 0.044 mm (0.0008 – 0.0017 in.)
   Service Limit: 0.050 mm (0.0020 in.)

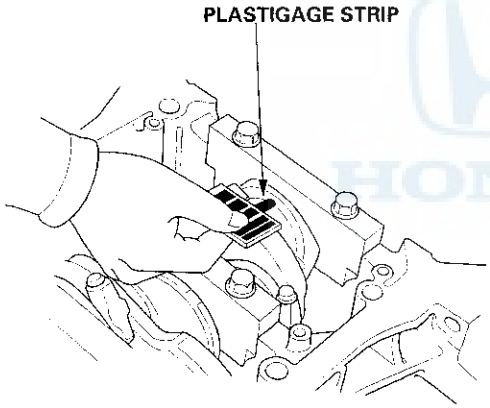

6. If the plastigage measures too wide or too narrow, remove the upper half of the bearing, install a new, complete bearing with the same color code, and recheck the clearance. Do not file, shim, or scrape the bearings or the caps to adjust clearance.
7. If the plastigage shows the clearance is still incorrect, try the next larger or smaller bearing (the color listed above or below that one), and check clearance again. If the proper clearance cannot be obtained by using the appropriate larger or smaller bearings, replace the crankshaft and start over.

Rod Bearing Selection

1. Inspect the connecting rods for cracks and heat damage.

Connecting Rod Bore/Journal Code Locations

2. Each rod has a tolerance range (from 0 to 0.024 mm (0.0009 in.), in 0.006 mm (0.0002 in.) increments) depending on the size of its big end bore.
   It's then stamped with a code (1,2,3, or 4/I, II, III,or IIII) indicating the range.
   You may find any combination of 1,2,3, or 4/I, II, III, or IIII in any engine.
   Half of the code is stamped on the bearing cap and the other half is stamped on the rod. If the codes are indecipherable because of an accumulation of dirt and dust, do not scrub them with a wire brush or scraper. Clean them only with solvent or detergent.

   Normal Bore Size: 56.0 mm (2.20 in.)

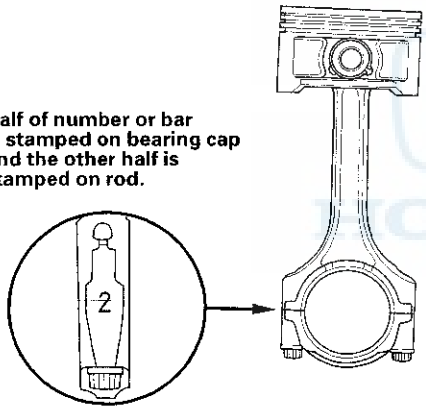

Connecting Rod Journal Code Locations

3. Letters or bars have been stamped on the crankshaft No. 1 web as a code for the rod journal sizes.

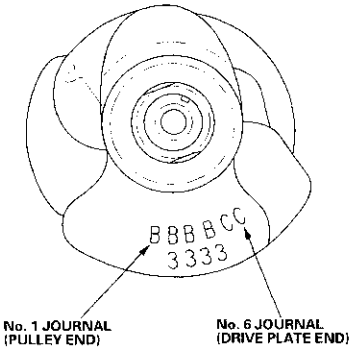

4. Use the connecting rod bore codes and journal codes to select the appropriate rod bearing from the table.

Bearing Identification

Color code is on the edge of the bearing

Smaller rod Journal ↓ / Smaller bearing (Thicker) ↓	Larger big end bore → / Smaller bearing (Thicker) →			
	1 or I	2 or II	3 or III	4 or IIII
A or I	Pink	Pink/ Yellow	Yellow	Yellow/ Green
B or II	Pink/ Yellow	Yellow	Yellow/ Green	Green
C or III	Yellow	Yellow/ Green	Green	Green/ Brown
D or IIII	Yellow/ Green	Green	Green/ Brown	Brown
E or IIIII	Green	Green/ Brown	Brown	Brown/ Black
F or IIIIII	Green/ Brown	Brown	Brown/ Black	Black

NOTE: When using bearing halves of different colors, it does not matter which color is used in the top or bottom.

Crankshaft and Piston Removal

1. Remove the CKP sensor (A) from the oil pump, then remove the timing belt drive pulley (B).

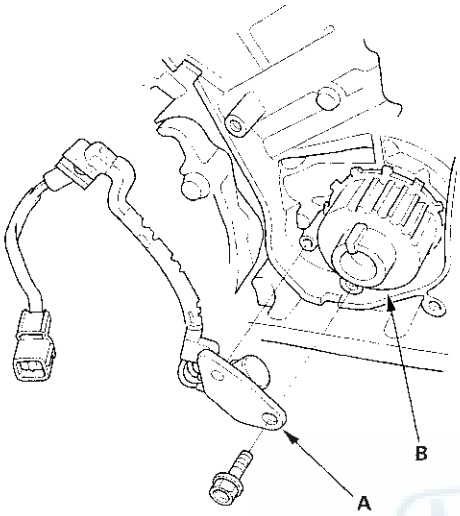

2. Remove the oil pan.

3. Remove the engine block end cover.

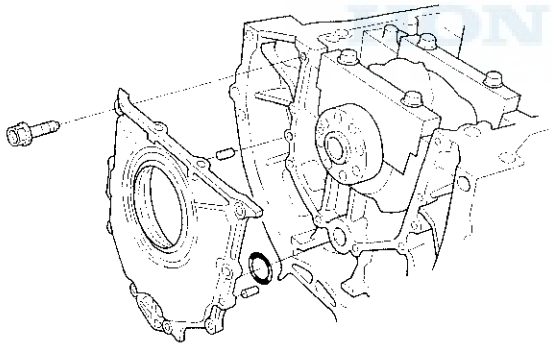

4. Remove the oil screen (A), baffle plate (B) and oil pump (C).

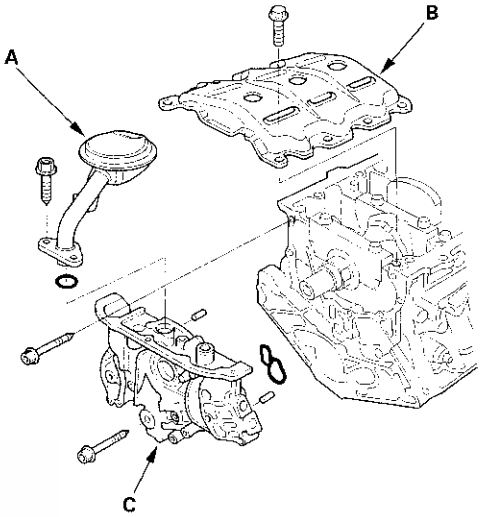

5. If you can feel a ridge of metal or hard carbon around the top of any cylinder, remove it with a ridge reamer (A). Follow the reamer manufacturer's instructions. If the ridge is not removed, it may damage the piston as it is pushed out.

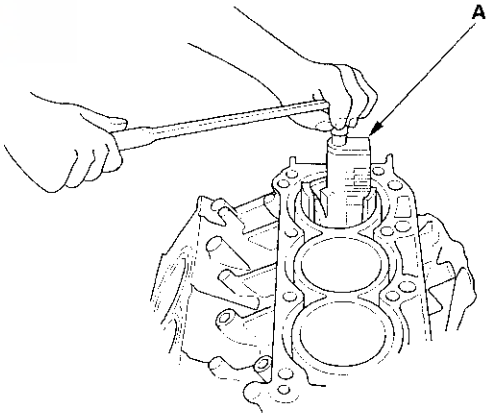

6. Remove the connecting rod caps after setting the crank pin at BDC for each cylinder. Remove the piston assembly by pushing on the connecting rod. Take care not to damage the crank journal or cylinder with the connecting rod.

CORRECT

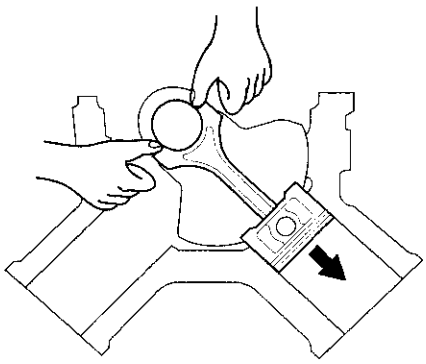

INCORRECT

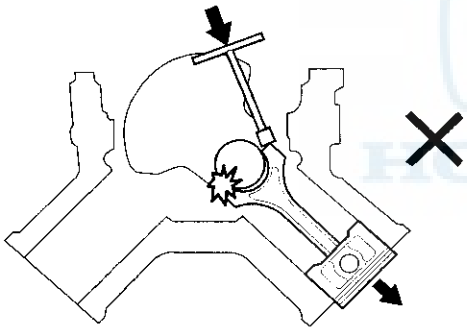

7. Remove the bearing from the cap. Keep all caps/bearings in order.

8. Remove the upper bearing halves from the connecting rods and set them aside with their respective caps.

9. After removing a piston/connecting rod assembly, reinstall the cap on the rod.

10. To avoid mixup during reassembly, mark each piston/connecting rod assembly with its cylinder number.

11. Remove the bearing cap bolts (A) and bearing cap side bolts (B), then remove the bearing cap (C).

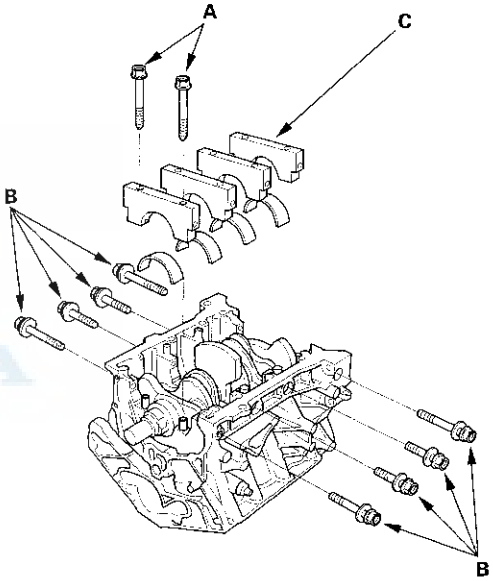

(cont'd)

Crankshaft and Piston Removal (cont'd)

12. Lift the crankshaft (A) out of the cylinder block, being careful not to damage the journals.

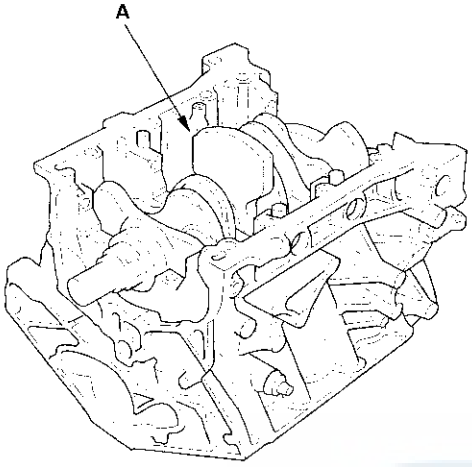

13. Reinstall the main caps and bearings on the cylinder block in the proper order.

Crankshaft Inspection

Straightness

1. Clean the crankshaft oil passages with pipe cleaners or a suitable brush.
2. Check the keyway and threads.
3. Support the crankshaft with a lathe-type tool or V-blocks.
4. Measure runout on all main journals to make sure the crank is not bent. Rotate the crankshaft 2 complete revolutions. The difference between measurements on each journal must not be more that the service limit.

Crankshaft Total Runout:
Standard (New): 0.020 mm (0.0008 in.) max.
Service Limit: 0.030 mm (0.0012 in.)

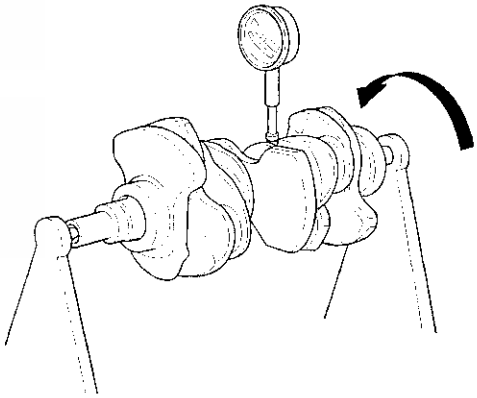

Out-of-Round and Taper

1. Measure out-of-round at the middle of each rod and main journal in 2 places. The difference between measurements on each journal must not be more than the service limit.

   Journal Out-of-Round:
   Standard (New): 0.005 mm (0.0002 in.) max.
   Service Limit: 0.010 mm (0.0004 in.)

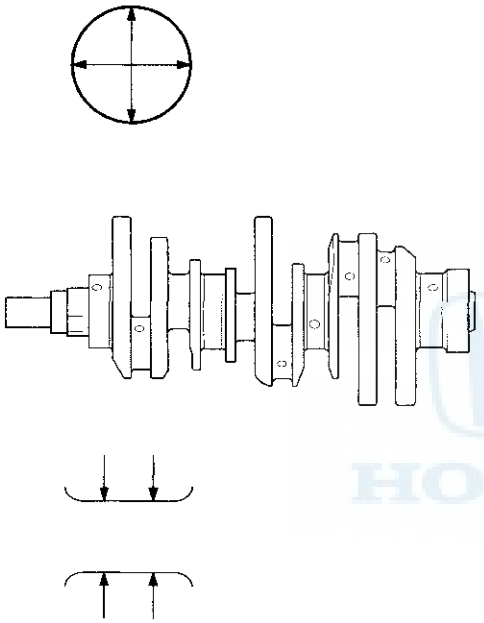

2. Measure taper at the edges of each rod and main journal. The difference between measurements on each journal must not be more than the service limit.

   Journal Taper:
   Standard (New): 0.005 mm (0.0002 in.) max.
   Service Limit: 0.010 mm (0.0004 in.)

Block and Piston Inspection

1. Check the piston for distortion or cracks.

2. Measure the piston diameter at a point 16.0 mm (0.63 in.) from the bottom of the skirt.

   Piston Diameter:
   Standard (New): 85.975–85.985 mm (3.3848–3.3852 in.)
   Service Limit: 85.965 mm (3.3844 in.)

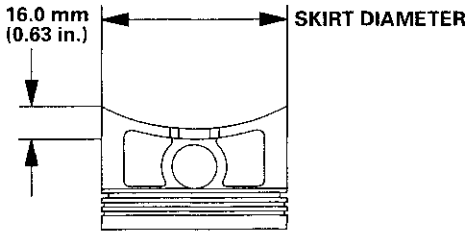

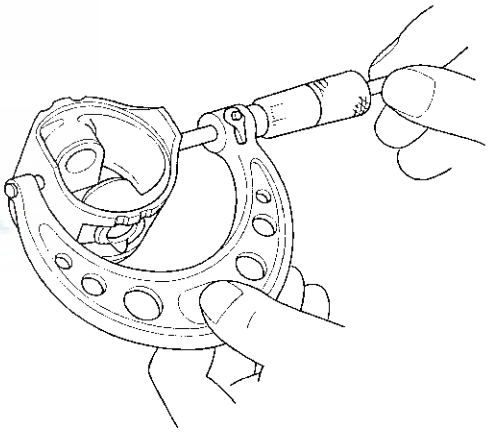

(cont'd)

Block and Piston Inspection (cont'd)

3. Measure wear and taper in directions X and Y at 3 levels in each cylinder as shown.

   - If the measurements in any cylinder are beyond the oversize bore service limit, replace the cylinder block.
   - If the block is to be rebored, refer to Piston Clearance Inspection after reboring (refer to step 5).

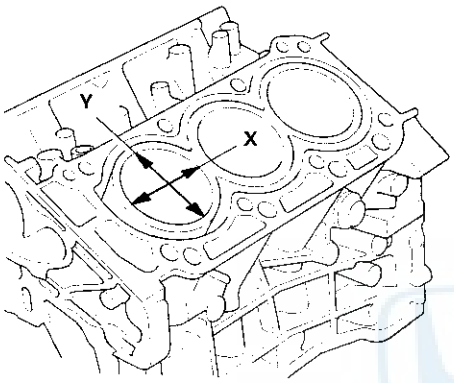

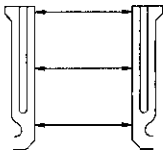

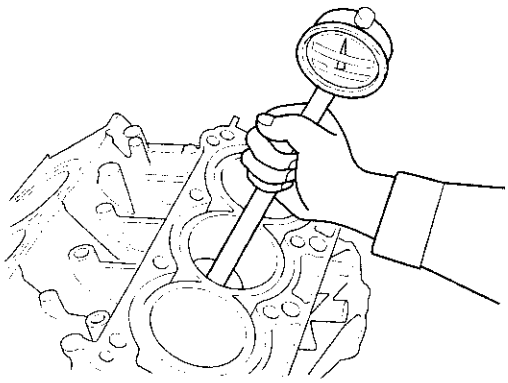

Cylinder Bore Size:
Standard (New): 86.000 – 86.015 mm (3.3858 – 3.3864 in.)
Service Limit: 86.065 mm (3.3884 in.)

Reboring Limit: 0.50 mm (0.02 in.)

Oversize
0.25: 86.250 – 86.265 mm (3.3957 – 3.3963 in.)
0.50: 86.500 – 86.515 mm (3.4055 – 3.4061 in.)

Bore Taper
Limit: (Difference between first and third measurement) 0.05 mm (0.002 in.)

4. Check the top of the cylinder block for warpage. Measure along the edges and across the center as shown.

Cylinder Block Warpage:
Standard (New): 0.07 mm (0.003 in.) max.
Service Limit: 0.10 mm (0.004 in.)

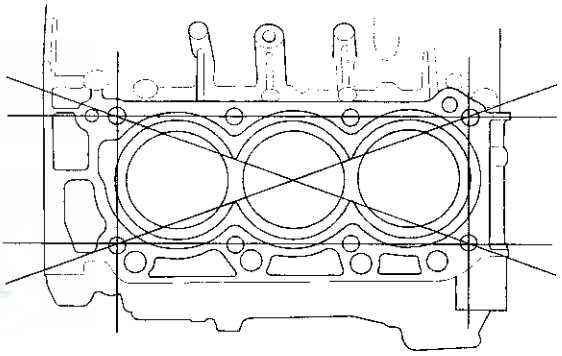

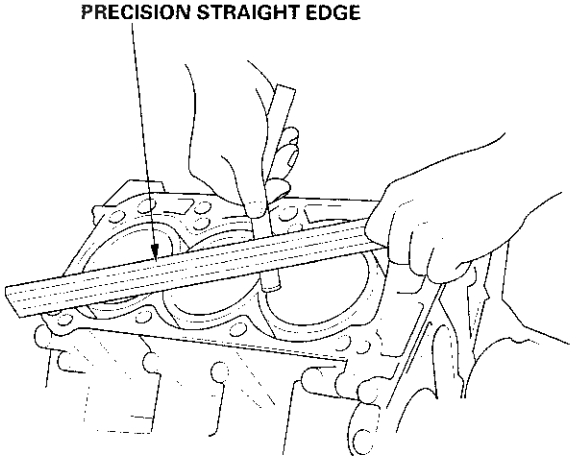

5. Calculate the difference between the cylinder bore diameter and piston diameter.

Piston-to-Block Clearance:
Standard (New): 0.015 – 0.040 mm (0.0006 – 0.0016 in.)
Service Limit: 0.08 mm (0.003 in.)

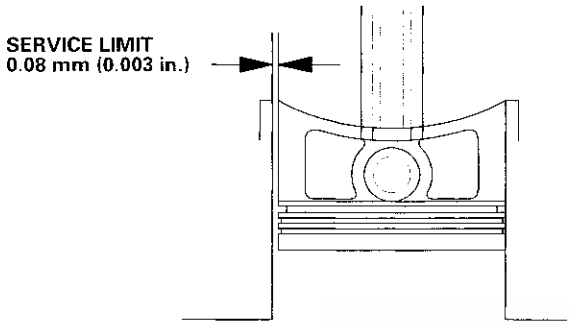

Oversize Piston Diameter
0.25: 86.225 – 86.235 mm (3.3947 – 3.3951 in.)
0.50: 86.475 – 86.485 mm (3.4045 – 3.4049 in.)

Cylinder Honing

1. Measure the cylinder bores (see page 7-15). If the cylinder block is to be reused, hone the cylinders and remeasure the bores. Only scored or scratched cylinder bores must be honed.

2. Hone the cylinder bores with honing oil and a fine (400 grit) stone in a 60 degree crosshatch pattern.

   NOTE:
   - Use only a rigid hone with 400 grit or finer stone, such as Sunnen, Ammco, or equivalent.
   - Do not use stones that are worn or broken.

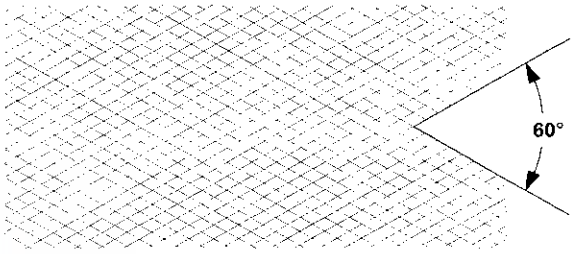

3. When honing is complete, thoroughly clean the cylinder block of all metal particles. Wash the cylinder bores with hot soapy water, then dry and oil them immediately to prevent rusting. Never use solvent, it will only redistribute the grit on the cylinder walls.

4. If scoring or scratches are still present in the cylinder bores after honing to the service limit, rebore the cylinder block. Some light vertical scoring and scratching is acceptable if it is not deep enough to catch your fingernail and does not run the full length of the bore.

Piston, Pin and Connecting Rod Replacement

Disassembly

1. Apply engine oil to the piston pin snap rings (A) and turn them in the ring grooves until the end gaps are lined up with the cutouts in the piston pin bores (B).

   NOTE: Take care not to damage the ring grooves.

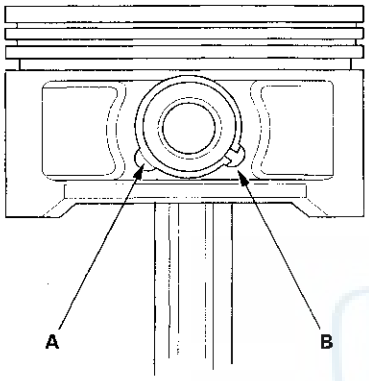

2. Remove both snap rings (A). Start at the cutout in the piston pin bore. Remove the snap rings carefully so they do not go flying or get lost. Wear eye protection.

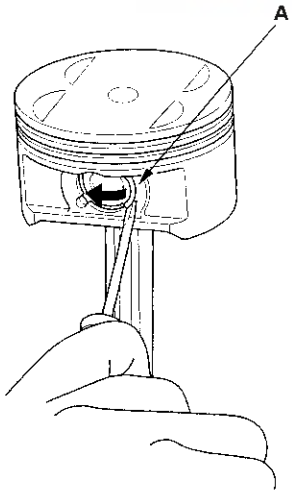

3. Heat the piston and connecting rod assembly to approximately 158°F (70°C), then remove the piston pin.

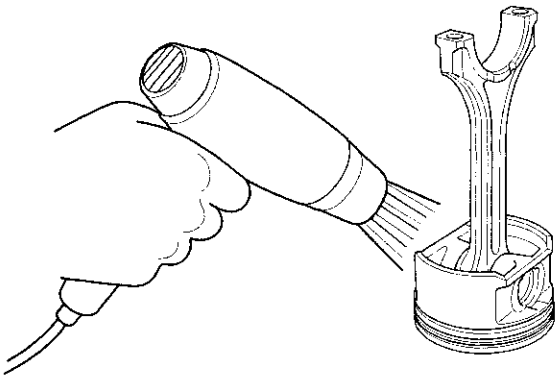

Inspection

NOTE: Inspect the piston, piston pin and connecting rod when they are at room temperature.

1. Measure the diameter of the piston pin.

   Piston Pin Diameter:
   Standard (New): 21.962 – 21.965 mm
   (0.8646 – 0.8648 in.)
   Service Limit: 21.954 mm (0.8643 in.)

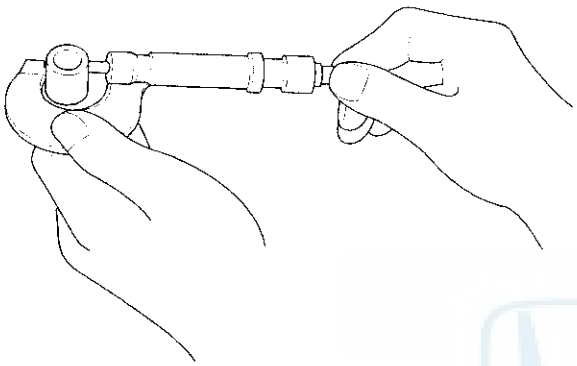

2. Zero the dial indicator to the piston pin diameter.

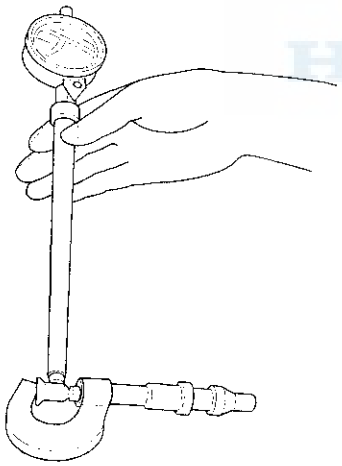

3. Check the difference between the piston pin diameter and piston pin hole diameter in the piston.

   Piston Pin-to-Piston Clearance:
   Standard (New): 0.0050 to +0.0010 mm
   (0.00020 to +0.00004 in.)
   Service Limit: 0.004 mm (0.0002 in.)

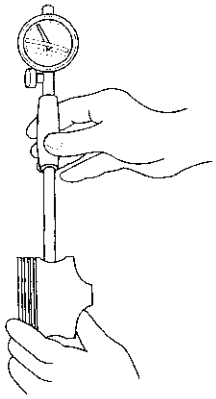

4. Measure the piston pin-to-connecting rod clearance.

   Piston Pin-to-Connecting Rod Clearance:
   Standard (New): 0.005 – 0.014 mm
   (0.0002 – 0.0006 in.)
   Service Limit: 0.019 mm (0.0007 in.)

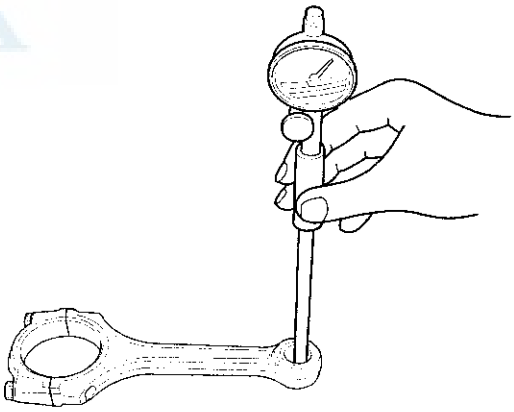

(cont'd)

Piston, Pin and Connecting Rod Replacement (cont'd)

Reassembly

1. Install a piston pin snap ring (A).

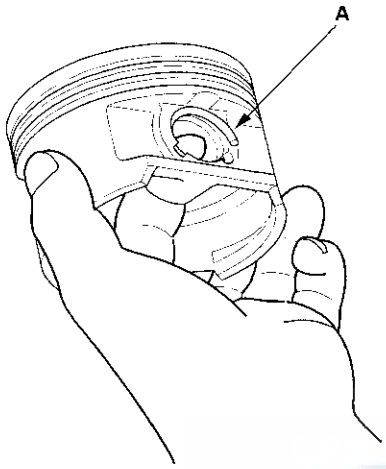

2. Coat the piston pin bore in the piston, the bore in the connecting rod, and the piston pin with engine oil.

3. Heat the piston to approximately 158°F (70°C).

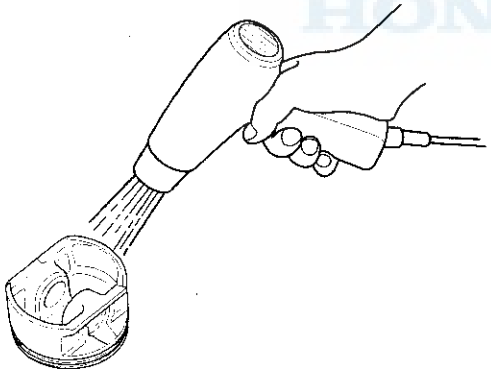

4. Install the piston pin (A). Assemble the piston (B) and connecting rod (C) with the embossed marks (D) on the same side.

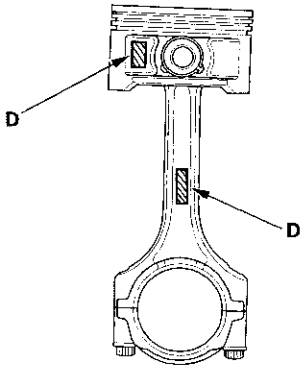

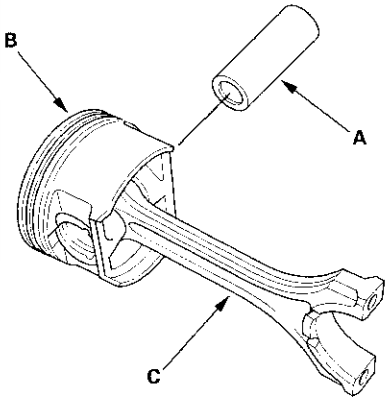

5. Install the remaining snap ring.

Connecting Rod Bolt Inspection

1. Measure the diameter of each connecting rod bolt at point A and point B.

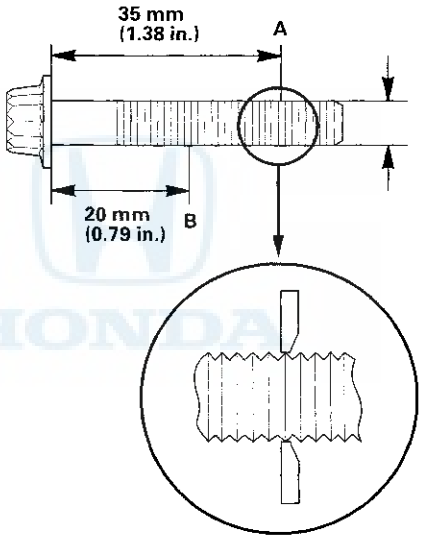

2. Calculate the difference in diameter between point A and point B.

   Point A − Point B = Difference in Diameter

   Difference in Diameter:
   Specification: 0 − 0.1 mm (0 − 0.004 in.)

3. If the difference in diameter is out of tolerance, replace the connecting rod bolt.

Piston Ring Replacement

1. Using a piston, push a new ring (A) into the cylinder bore 15—20 mm (0.6—0.8 in.) from the bottom.

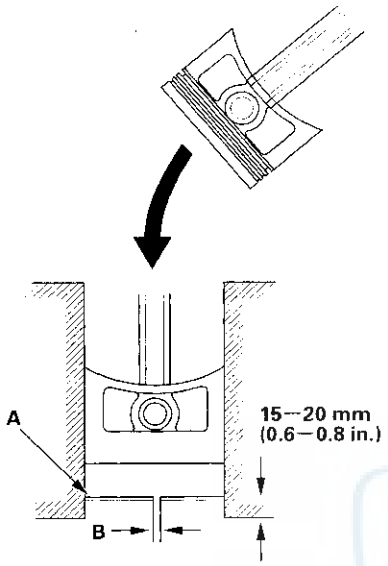

2. Measure the piston ring end-gap (B) with a feeler gauge:

   - If the gap is too small, check to see if you have the proper rings for your engine.
   - If the gap is too large, recheck the cylinder bore diameter against the wear limits (see page 7-15).

   If the bore is over the service limit, the cylinder block must be rebored.

Piston Ring End-Gap:

Top Ring
Standard (New): 0.20—0.35 mm (0.008—0.014 in.)
Service Limit: 0.60 mm (0.024 in.)

2nd Ring
Standard (New): 0.40—0.55 mm (0.016—0.022 in.)
Service Limit: 0.70 mm (0.028 in.)

Oil Ring
Standard (New): 0.20—0.70 mm (0.008—0.028 in.)
Service Limit: 0.80 mm (0.031 in.)

3. Using a ring expander (A), remove the old piston rings (B).

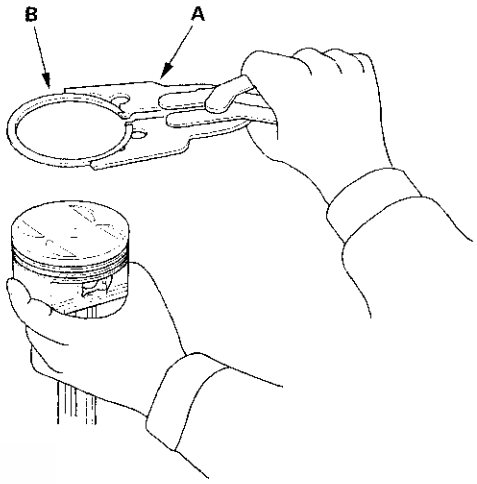

4. Clean all the ring grooves throughly with a squared-off broken ring or ring groove cleaner with a blade to fit the piston grooves. File down the blade if necessary. Top ring groove and 2nd ring grooves are 1.2 mm (0.05 in.) wide, and the oil ring groove is 2.8 mm (0.11 in.) wide. Do not use a wire brush to clean the ring grooves, or cut the ring grooves deeper with the cleaning tool.

   NOTE: If the piston is to be separated from the connecting rod, do not install new rings yet.

5. Install the rings as shown. The top ring (A) has a 1B and the 2nd ring (B) is marked 2B. The manufacturing marks (C) must be facing upward.

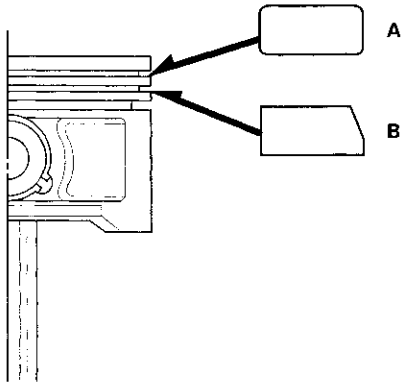

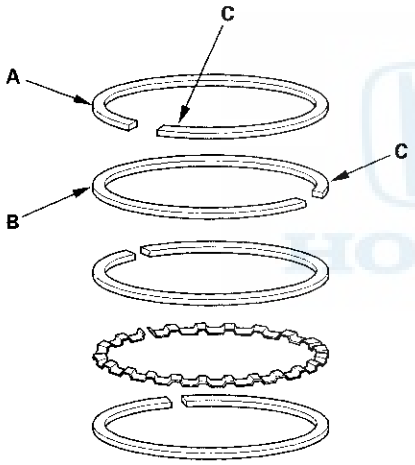

Piston Ring Dimensions:

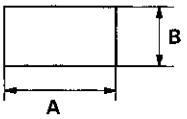

Top Ring (Standard)
A: 3.1 mm (0.12 in)
B: 1.2 mm (0.05 in)
2nd Ring (Standard)
A: 3.4 mm (0.13 in)
B: 1.2 mm (0.05 in)

6. After installing a new set of rings, measure the ring-to-groove clearance:

Top Ring Clearance
Standard (New): 0.035—0.060 mm (0.0014—0.0024 in.)
Service Limit: 0.13 mm (0.005 in.)

2nd Ring Clearance
Standard (New): 0.030—0.055 mm (0.0012—0.0022 in.)
Service Limit: 0.13 mm (0.005in.)

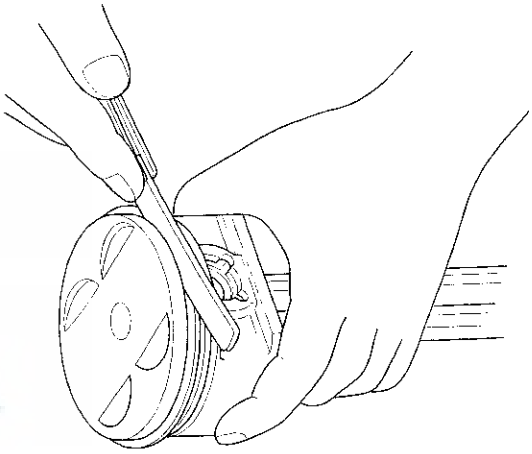

(cont'd)

Piston Ring Replacement (cont'd)

7. Rotate the rings in their grooves to make sure they do not bind.

8. Position the ring end gaps as shown:

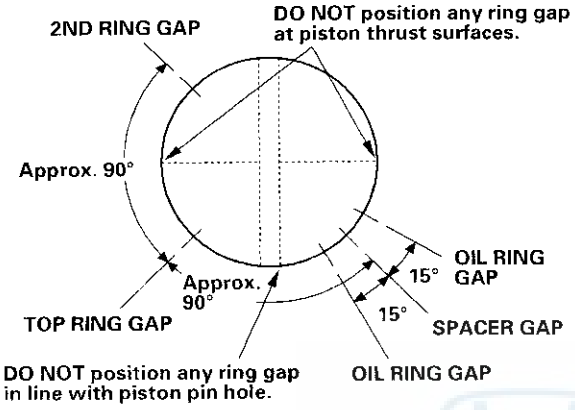

Crankshaft and Piston Installation

Special Tools Required
- Driver 07749-0010000
- Oil Seal Driver Attachment, 80 mm I.D. 07VAD-P8A010A

1. Apply engine oil to the main bearings and rod bearings.

2. Install the bearing halves in the cylinder block and connecting rods.

3. Lower the crankshaft (A) into the block.

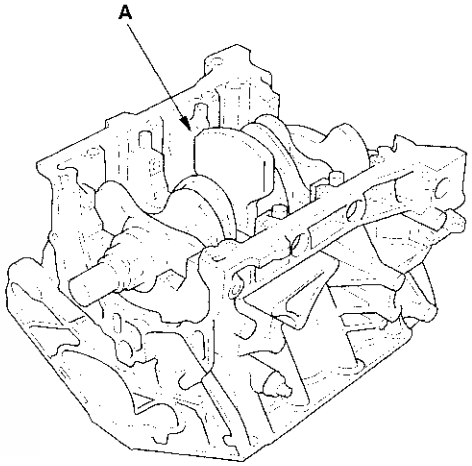

4. Oil the thrust washer surfaces. Install the thrust washers (A) in the No. 3 journal.

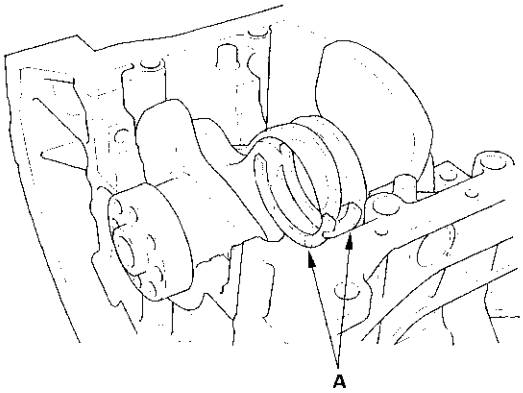

5. Install the bearings (A) and bearing caps (B) with the arrow (C) facing the timing belt end of the engine.

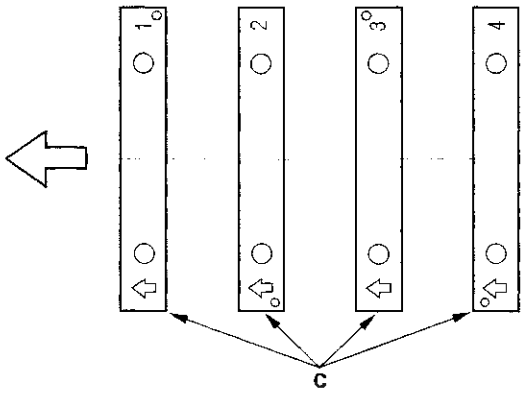

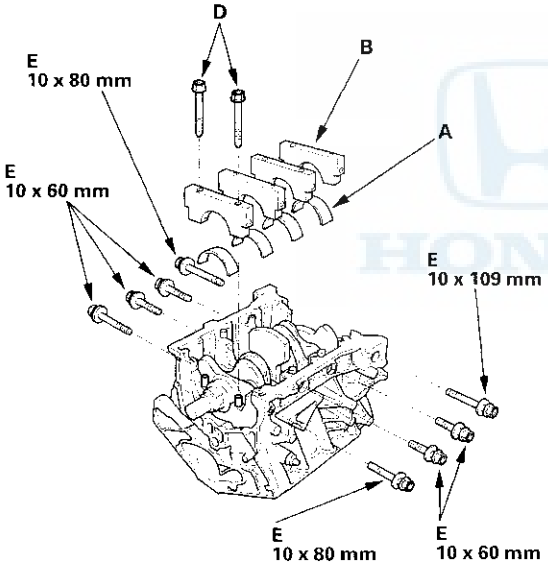

6. Apply engine oil to the bolt threads and flange, then install the bearing cap bolts (D) and bearing cap side bolts (E).

7. Check the main bearing clearance with plastigage (see page 7-8).

8. Set the crankshaft to BDC for the cylinder you are working on.

9. Remove the connecting rod caps. Install the ring compressor, and check that the bearing is securely in place.

10. Install the piston with the arrow (A) facing the timing belt side of the engine.

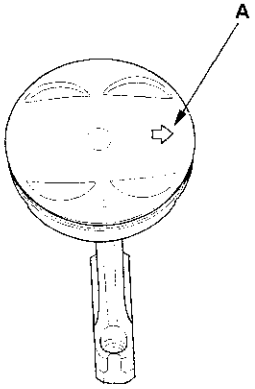

11. Position the piston in the cylinder, and tap it in using the wooden handle of a hammer (A). Maintain downward force on the ring compressor (B) to prevent the rings from expanding before entering the cylinder bore.

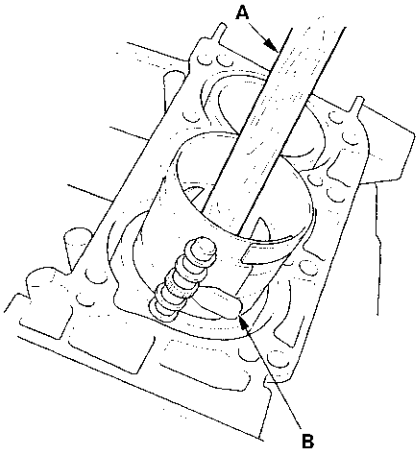

12. Stop after the ring compressor pops free, and check the connecting rod-to-crank journal alignment before pushing the piston into place.

(cont'd)

Crankshaft and Piston Installation (cont'd)

13. Check the connecting rod bearing clearance with plastigage (see page 7-10).

14. Line up the mark (A) on the connecting rod and cap, then install the cap.

15. Apply engine oil to the bolt threads. Torque the bolts (B) to 20 N·m (2.0 kgf·m, 14 lbf·ft).

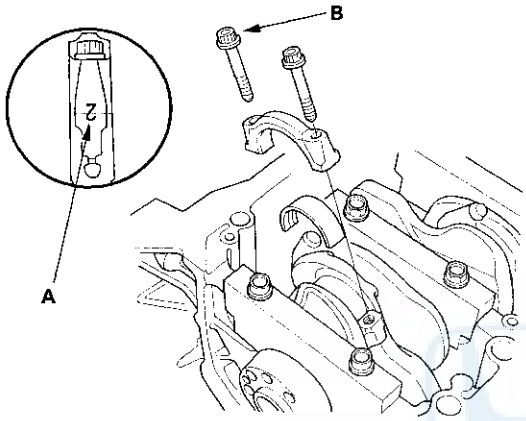

16. Mark the connecting rod (A) and bolt head (B) as shown.

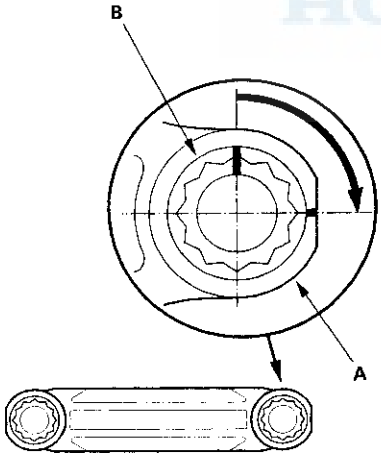

17. Tighten the bolt until the mark on the bolt head lines up with the mark on the connecting rod (turn the bolt 90°).

18. Torque the bearing cap bolts (A), then torque the bearing cap side bolts (B). Follow the numbered sequence shown.

NOTE: Whenever any crankshaft or connecting rod bearing is replaced, it is necessary after reassembly to run the engine at idling speed until it reaches normal operating temperature, then continue to run it for approximately 15 minutes.

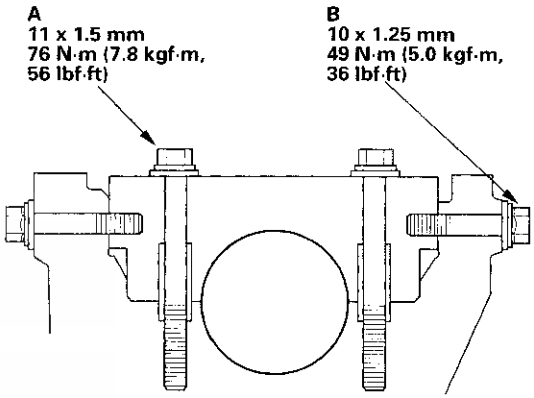

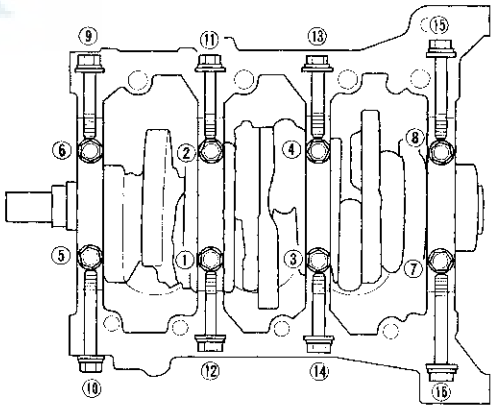

19. The seal mating surface on the engine block end cover should be dry.

20. Drive the crankshaft oil seal sequarely into the left side cover.

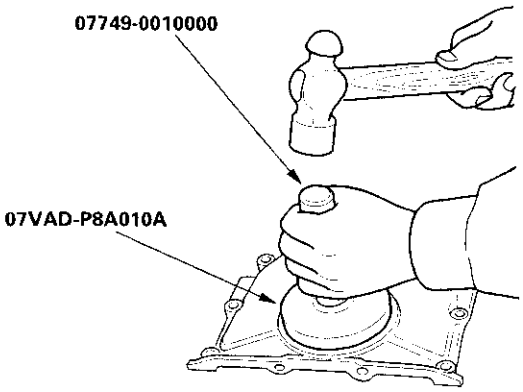

21. Confirm that the clearance is equal all the way around with a feeler gauge.

Clearance: 0.5—0.8 mm (0.02—0.03 in.)

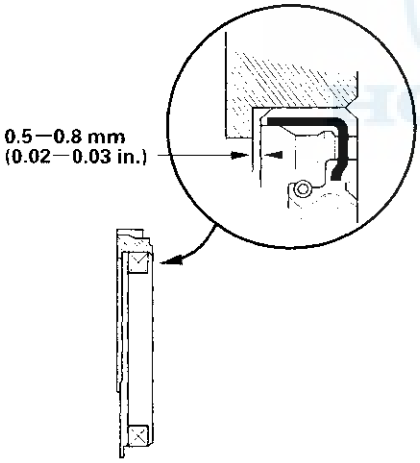

22. Clean and dry the left side cover mating surfaces. Apply a light coat of grease the crankshaft and to the lip of the seal.

23. Apply liquid gasket, part No. 08718-0001 or 08718-0003, evenly to the block mating surface of the left side cover and to the inner threads of the bolt holes. Install the dowel pins (A), new O-ring (B) and the engine block end cover (C) on the cylinder block.

NOTE: Do not install the parts if 5 minutes or more have elapsed since applying the liquid gasket. Instead, reapply liquid gasket after removing the old residue.

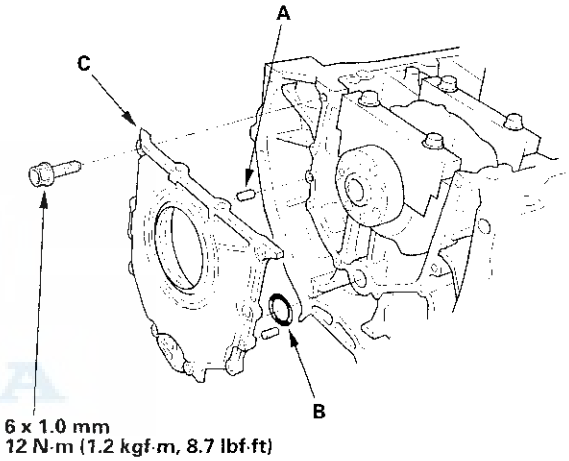

24. After assembly, wait at least 30 minutes before filling the engine with oil.

(cont'd)

Crankshaft and Piston Installation (cont'd)

25. Clean and dry the oil pump mating surfaces.

26. Install the oil pump (A).

    -1 Install a new crankshaft oil seal in the oil pump (see step 15 on page 8-9).
    -2 Apply liquid gasket, part No. 08718-0001 or 08718-0003, evenly to the block mating surface of the oil pump and to the inner threads of the bolt holes.
    -3 Grease the lip of the oil seal and apply oil to the new O-ring (B).
    -4 Install the dowel pins (C), then align the inner rotor with the crankshaft and install the oil pump.
    -5 Clean the excess grease off the crankshaft and check the seal for distortion.

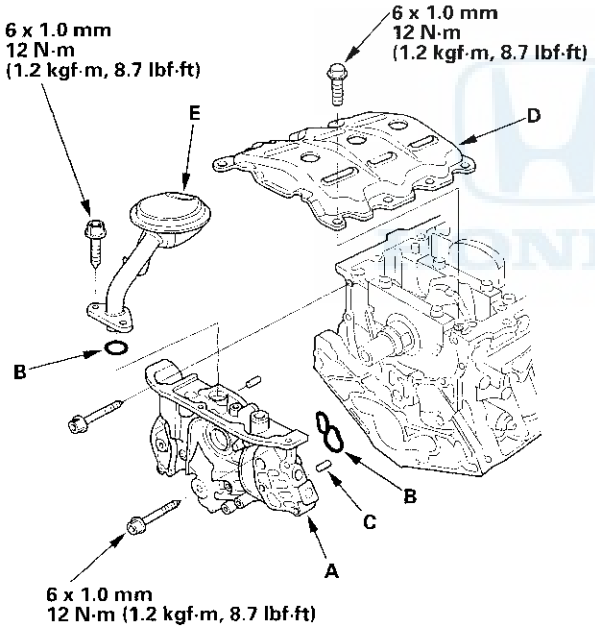

27. Install the baffle plate (D), then install the oil screen (E).

28. Clean and dry the oil pan mating surfaces.

29. Apply liquid gasket, part No. 08718-0001 or 08718-0003, evenly to the oil pan mating surface of the block and to the inner threads of the bolt holes.

30. Install the oil pan with a new gasket.

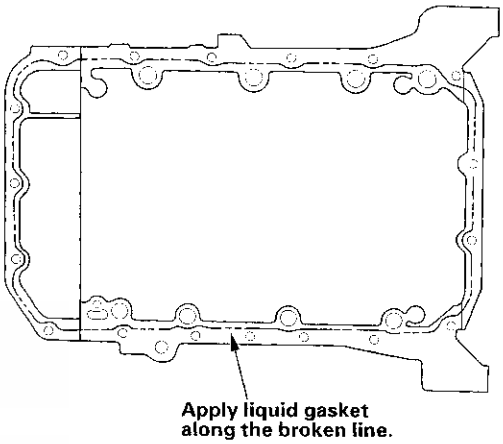

31. Tighten the bolts in 2 or 3 steps. In the final step, tighten all bolts, in sequence, to 12 N·m (1.2 kgf·m, 8.7 lbf·ft).

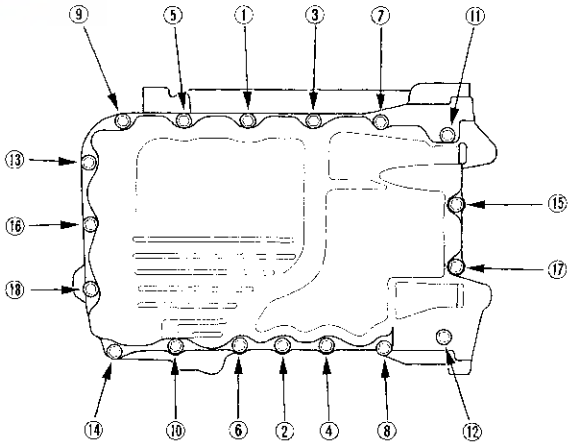

Pulley End Crankshaft Seal Installation - In-car

Special Tools Required
Oil Seal Driver 07LAD-PT3010A

1. Dry the crankshaft oil seal housing.

2. Apply a light coat of grease to the crankshaft and to the lip of the seal.

3. Using the seal driver, drive in the crankshaft oil seal until the driver bottoms against the oil pump. When the seal is in place, clean any excess grease off the crankshaft, and check that the oil seal lip is not distorted.

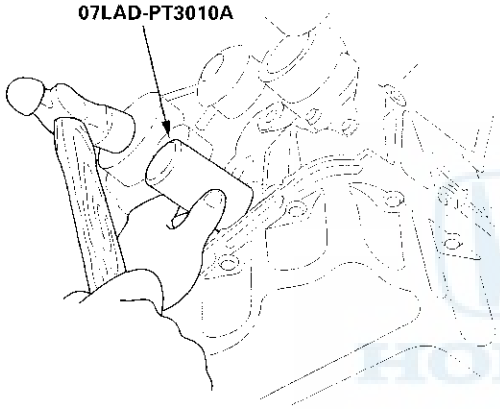

Transmission End Crankshaft Seal Installation - In-car

Special Tools Required
- Driver 07749-0010000
- Oil Seal Driver Attachment, 80 mm I.D. 07VAD-P8A010A

1. Dry the crankshaft oil seal housing.

2. Apply a light coat of grease to the crankshaft and to the lip of the seal.

3. Using the special tools, drive the crankshaft oil seal into the engine block end cover until the driver attachment bottoms against the crankshaft. Align the hole in the driver attachment with the pin on the crankshaft.

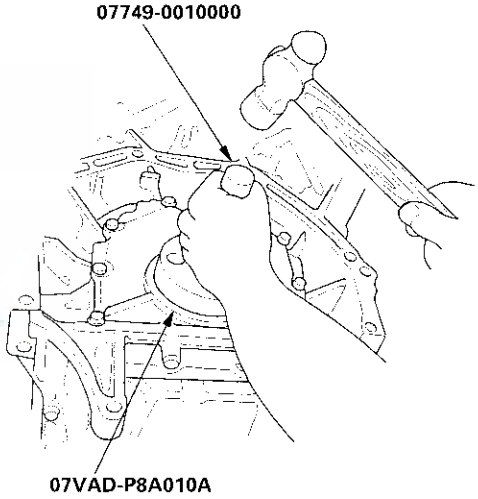

4. Clean any excess grease off the crankshaft, and check that the oil seal lip is not distorted.

HONDA

Engine Mechanical

Engine Lubrication

Engine Lubrication

Special Tools

Ref. No.	Tool Number	Description	Qty
①	07GAD-PH70201	Oil Seal Driver	1
②	07912-6110001	Oil Filter Wrench	1

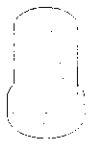

①

②

Component Location Index

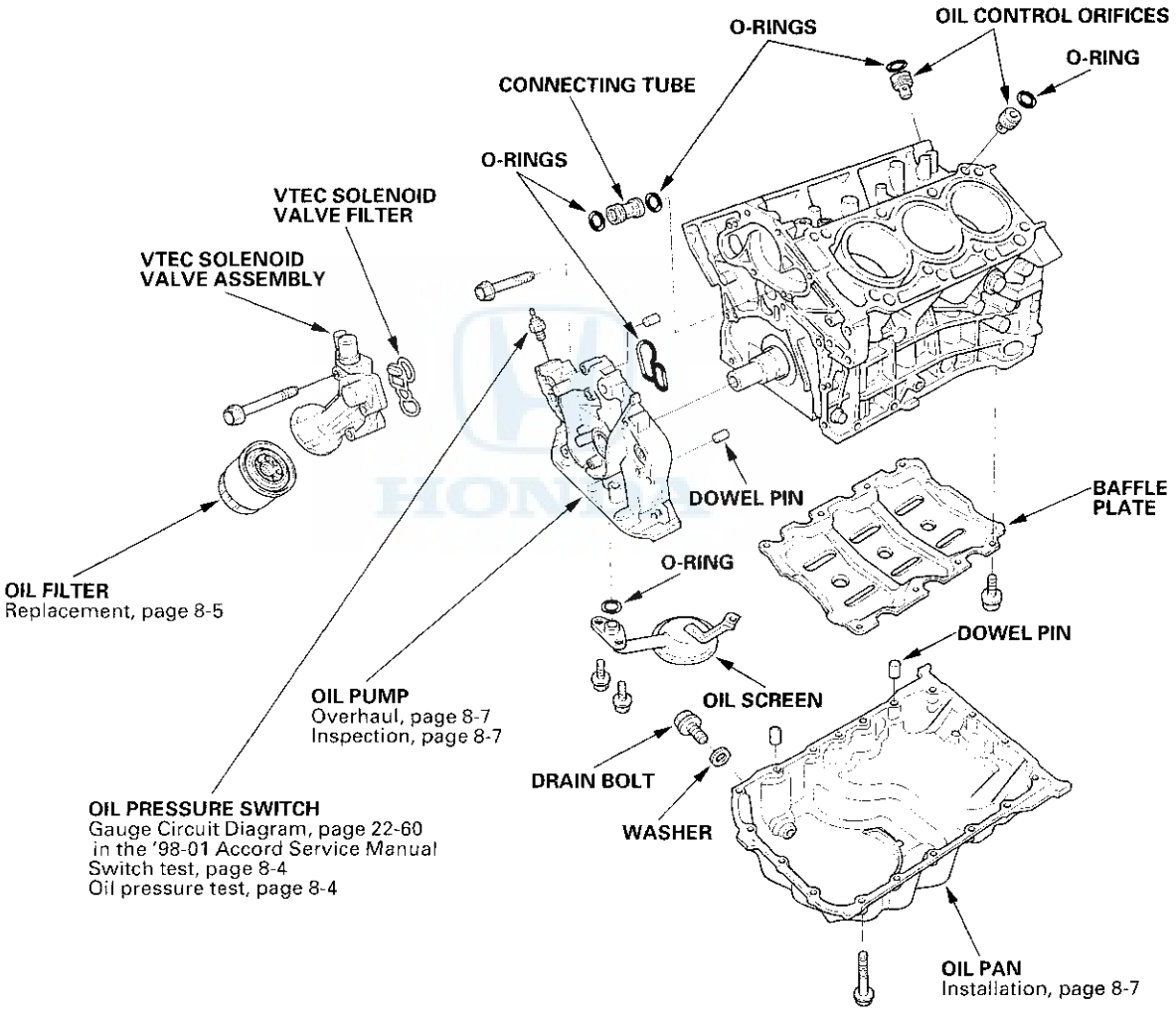

Oil Pressure Switch Test

1. Remove the YEL/RED wire (A) from the engine oil pressure switch (B).

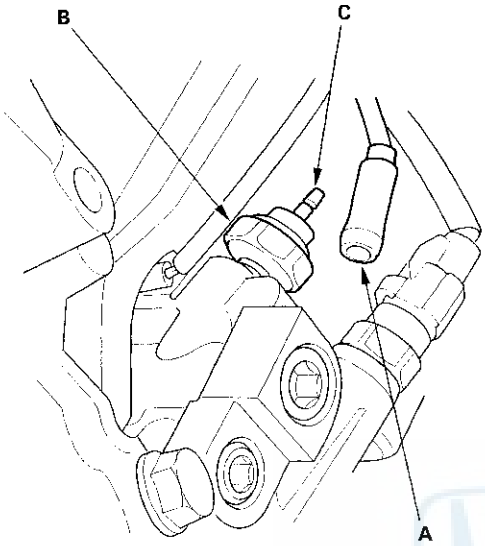

2. Check for continuity between the positive terminal (C) and the engine (ground). There should be continuity with the engine stopped. There should be no continuity with the engine running.

3. If the switch fails to operate, check the engine oil level. If the engine oil level is OK, check the engine oil pressure.

Oil Pressure Test

If the oil pressure warning light stays on with the engine running, check the engine oil level. If the oil level is correct:

1. Connect a tachometer.

2. Remove the engine oil pressure switch and install an oil pressure gauge (A).

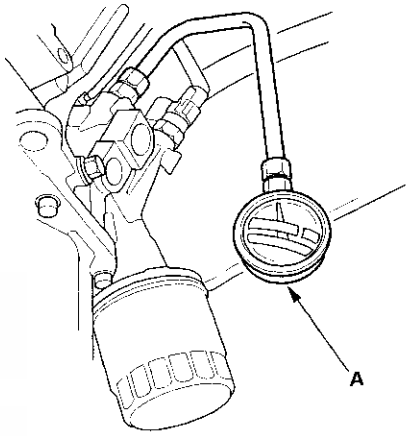

3. Start the engine. Shut it off immediately if the gauge registers no oil pressure. Repair the problem before continuing.

4. Allow the engine to reach operating temperature (fan comes on at least twice). The pressure should be:

   Engine Oil Temperature: 176°F (80°C)
   Engine Oil Pressure:
   At Idle: 70 kPa (0.7 kgf/cm², 10 psi) minimum
   At 3,000 rpm: 490 kPa (5.0 kgf/cm², 71 psi) minimum

5. If oil pressure is NOT within specifications, inspect the oil pump (see page 8-7).

Engine Oil Replacement

NOTE: Under normal conditions, the oil filter should be replaced at every other oil change. Under severe conditions, the oil filter should be replaced at each oil change.

Change interval:
Every 7,500 miles (12,000 km) or 12 months (Normal conditions)
Every 3,750 miles (6,000 km) or 6 months (Severe conditions).

1. Warm up the engine.

2. Remove the drain bolt (A), and drain the engine oil.

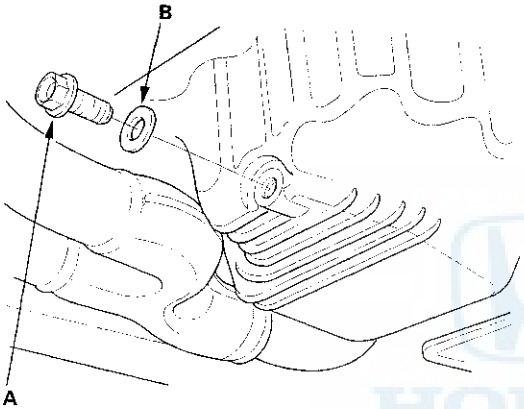

39 N·m (4.0 kgf·m, 29 lbf·ft)
Do not overtighten.

3. Reinstall the drain bolt with a new washer (B).

4. Refill with the recommended oil (see page 3-2).

   Capacity
   4.0 ℓ (4.2 US qt, 3.5 Imp qt) at oil change.
   4.4 ℓ (4.6 US qt, 3.9 Imp qt) at oil change including filter.
   5.0 ℓ (5.3 US qt, 4.4 Imp qt) after engine overhaul.

5. Run the engine for more than 3 minutes, then check for oil leakage.

Engine Oil Filter Replacement

Special Tools Required
Oil Filter Wrench 07912-6110001

1. Remove the oil filter with the special oil filter wrench.

2. Inspect the threads (A) and rubber seal (B) on the new filter. Wipe off the seat on the engine block, then apply a light coat of oil to the filter rubber seal. Use only filters with a built-in bypass system.

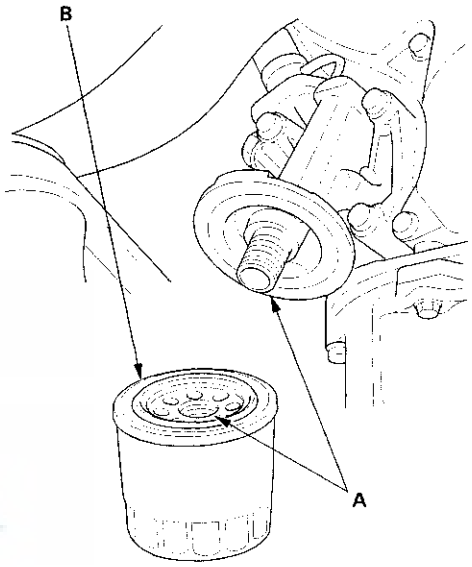

(cont'd)

Engine Oil Filter Replacement (cont'd)

3. Install the oil filter by hand.

4. After the rubber seal seats, tighten the oil filter clockwise with the special tool.

   Tighten: 7/8 turn clockwise.
   Tightening torque: 22 N·m (2.2 kgf·m, 16 lbf·ft)

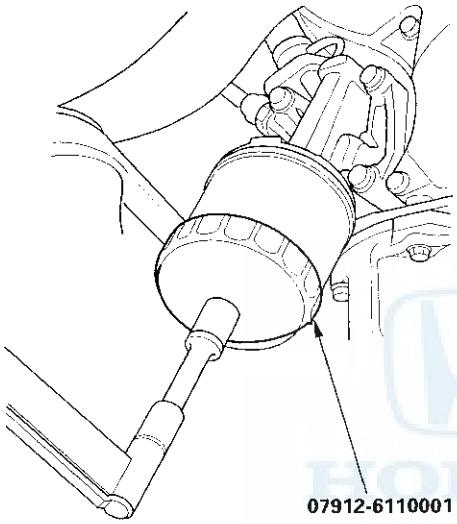

5. If 8 numbers (1 to 8) are printed around the outside of the filter, use the following procedure to tighten the filter.

   - Spin the filter on until its seal lightly seats against the block, and note which number is at the bottom.
   - Tighten the filter by turning it clockwise 7 numbers from the one you noted. For example, if number 2 is at the bottom when the seal is lightly seated, tighten the filter until the number 1 comes around to the bottom.

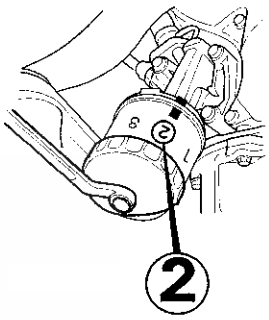

Number when rubber seal is seated.

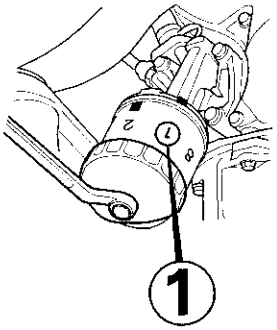

Number after tightening.

Number when rubber seal is seated	1	2	3	4	5	6	7	8
Number after tightening	8	1	2	3	4	5	6	7

6. After installation, fill the engine with oil up to the specified level, run the engine for more than 3 minutes, then check for oil leakage.

Oil Pump Overhaul

Exploded View

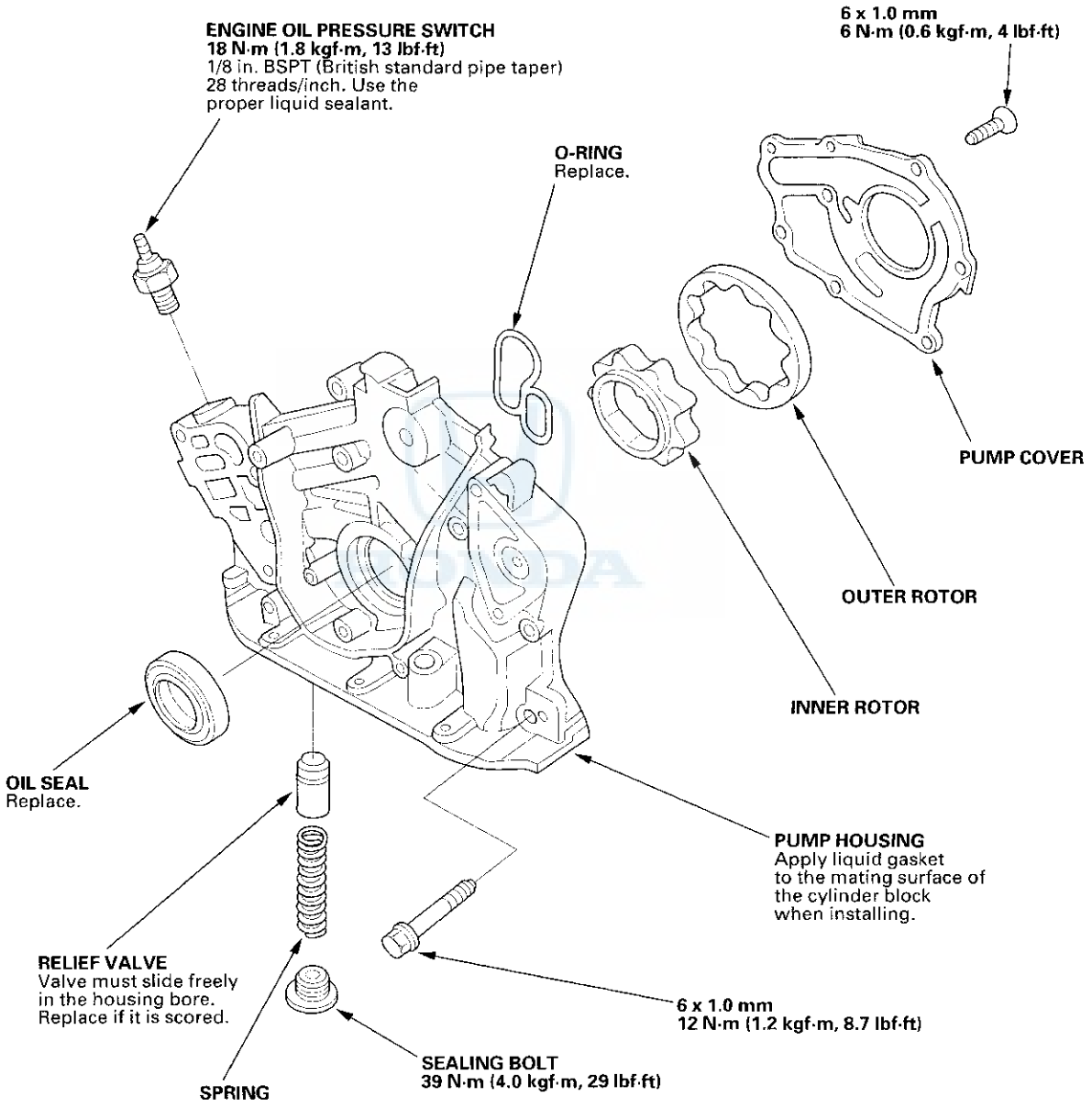

(cont'd)

Oil Pump Overhaul (cont'd)

Special Tools Required
Oil Seal Driver 07GAD-PH70201

Removal

1. Drain the engine oil.
2. Turn the crankshaft so that the No. 1 piston is at TDC (see page 6-22).
3. Remove the timing belt (see page 6-19).
4. Remove the idler pulley.
5. Remove the CKP sensor, then remove the timing belt drive pulley (see page 6-56).
6. Remove the VTEC solenoid valve and oil filter assembly (see page 6-9).
7. Remove the oil pan and the oil screen (A).

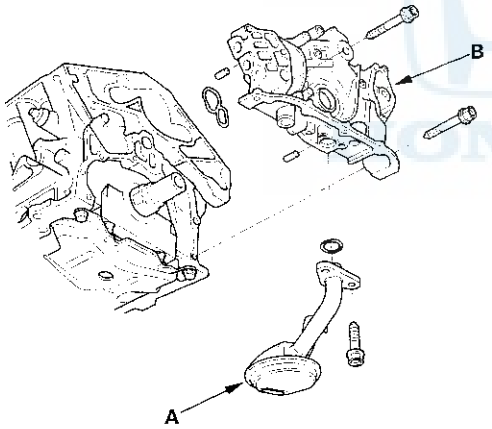

8. Remove the mounting bolts and the oil pump assembly (B).
9. Remove the screws from the pump housing, then separate the housing and cover.

Inspection

10. Check the inner-to-outer rotor radial clearance between the inner rotor (A) and outer rotor (B). If the inner-to-outer rotor clearance exceeds the service limit, replace the oil pump assembly.

Inner Rotor-to-Outer Rotor Radial Clearance
Standard (New): 0.04 – 0.16 mm (0.002 – 0.006 in.)
Service Limit: 0.20 mm (0.008 in.)

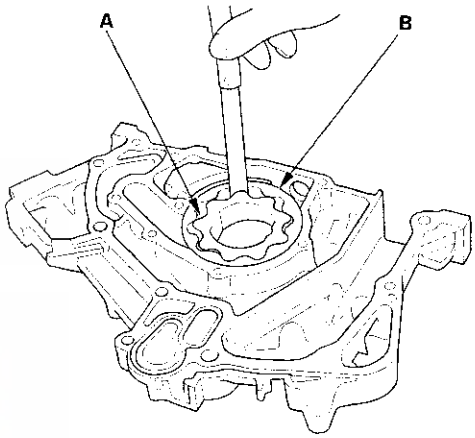

11. Check the housing-to-rotor axial clearance between the rotors (A) and pump housing (B). If the housing-to-rotor axial clearance exceeds the service limit, replace the oil pump assembly.

Housing-to-Rotor Axial Clearance
Standard (New): 0.02 – 0.07 mm (0.001 – 0.003 in.)
Service Limit: 0.12 mm (0.005 in.)

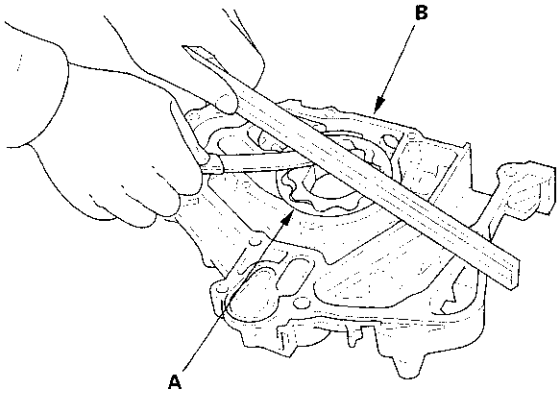

12. Check the housing-to-outer rotor radial clearance between the outer rotor (A) and pump housing (B). If the housing-to-outer rotor radial clearance exceeds the service limit, replace the oil pump assembly.

Housing-to-Outer Rotor Radial Clearance
Standard (New): 0.14 – 0.19 mm (0.006 – 0.007 in.)
Service Limit: 0.20 mm (0.008 in.)

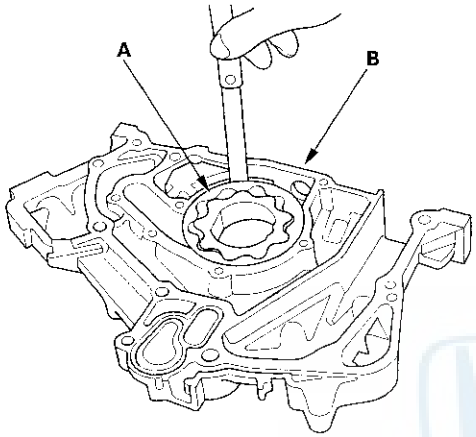

13. Inspect both rotors and the pump housing for scoring or other damage. Replace parts if necessary.

14. Remove the old oil seal from the oil pump.

15. Gently tap in the new oil seal until the special tool bottoms on the pump.

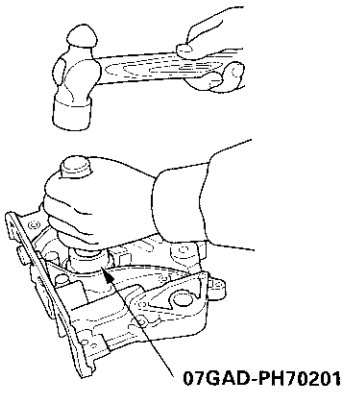

16. Apply liquid thread lock to the pump housing screws.

Installation

17. Reassemble the oil pump.

18. Check that the oil pump turns freely.

19. Clean and dry the oil pump mating surfaces.

20. Install the oil pump (A).
    - –1 Apply liquid gasket part No. 08718-0001 or 08718-0003 evenly to the block mating surface of the oil pump and to the inner threads of the bolt holes.
    - –2 Grease the lip of the oil seal and apply oil to the new O-rings (B).
    - –3 Install the dowel pins (C), then align the inner rotor with the crankshaft and install the oil pump.
    - –4 Clean the excess grease off the crankshaft, and check the seal for distortion.

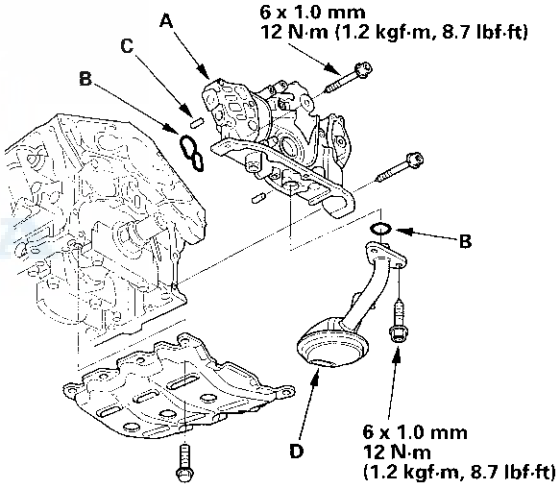

21. Install the oil screen (D).

(cont'd)

Oil Pump Overhaul (cont'd)

22. Clean and dry the oil pan mating surfaces.

23. Apply liquid gasket, part No. 08718-0001 or 08718-0003, evenly to the oil pan mating surface of the block and to the inner threads of the bolt holes.

24. Install the oil pan with a new gastet.

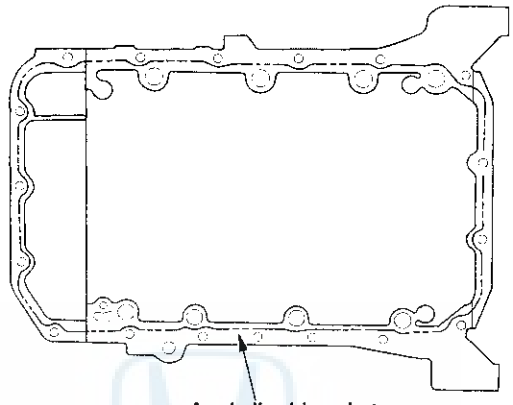

Apply liquid gasket along the broken line.

25. Tighten the bolts in 2 or 3 steps. In the final step, tighten all bolts, in sequence, to 12 N·m (1.2 kgf·m, 8.7 lbf·ft).

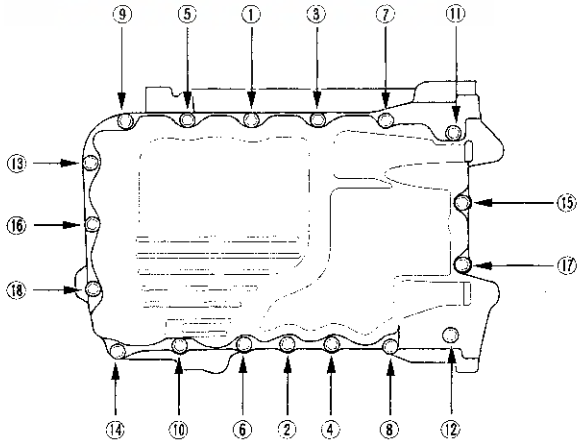

Engine Mechanical

Intake Manifold and Exhaust System

Intake Manifold Removal and Installation

NOTE:
- Use new O-rings and gaskets when reassembling.
- Check for folds or scratches on the surfaces of the gaskets.
- Replace with a new gasket if damaged.

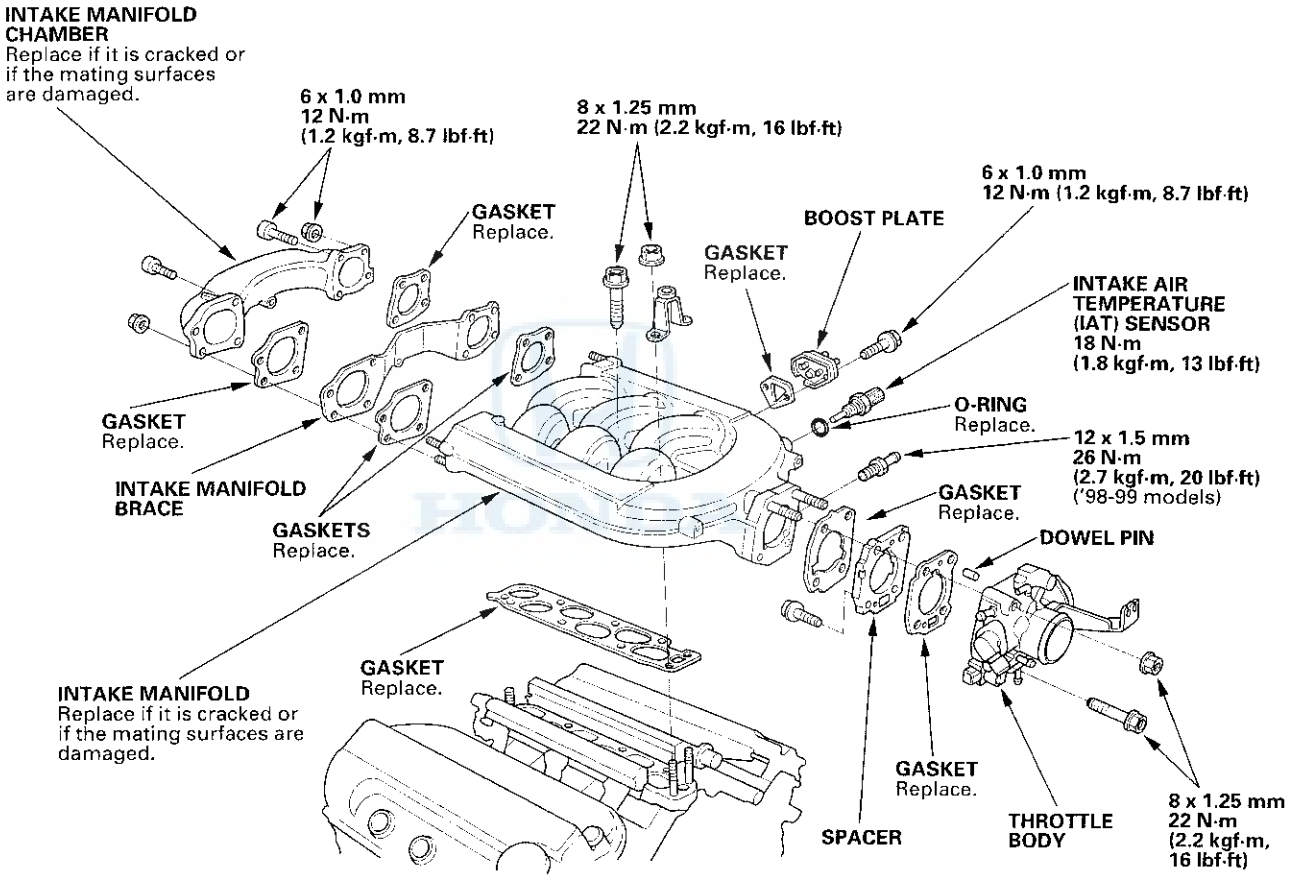

Exhaust Manifold Removal and Installation

NOTE:
- Use new gaskets and self-locking nuts when reassembling.
- Check for folds or scratches on the surfaces of the gaskets.
- Replace with a new gasket if damaged.

FRONT:

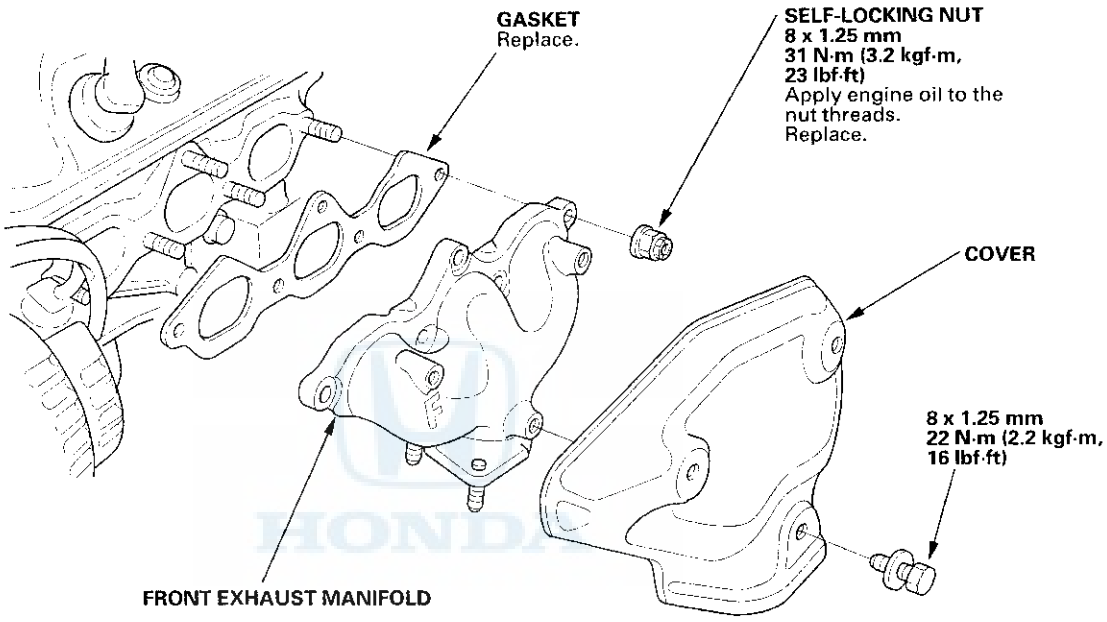

REAR:

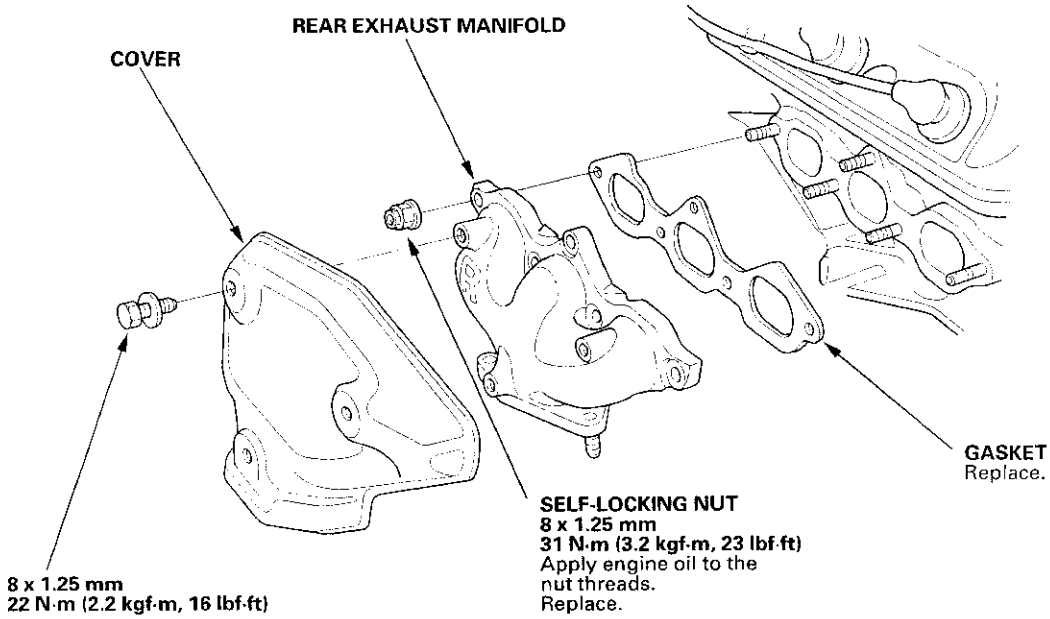

Exhaust Pipe and Muffler Replacement

NOTE: Use new gaskets and self-locking nuts when reassembling.

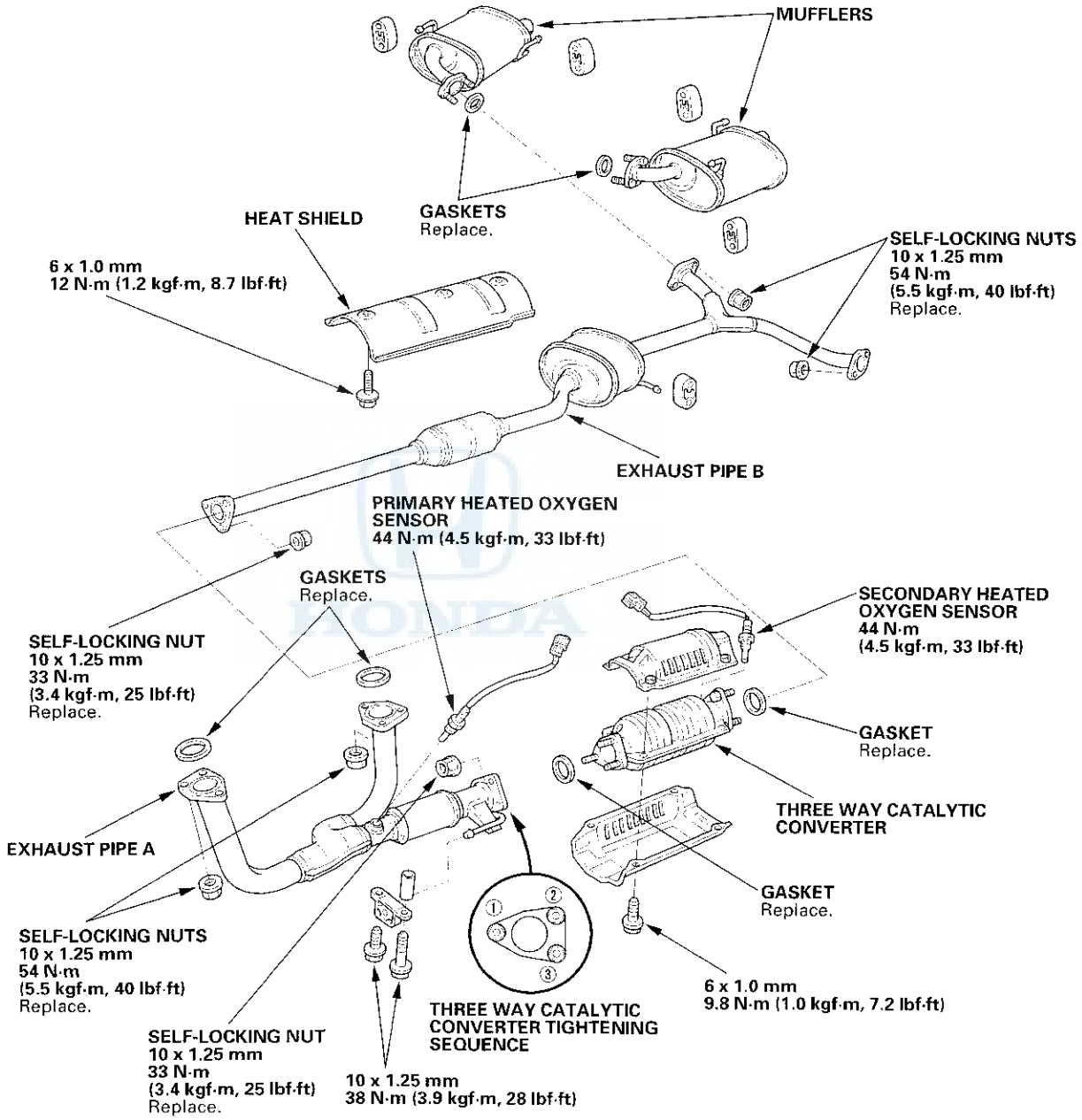

Engine Cooling

Cooling System

Fan Controls

Component Location Index

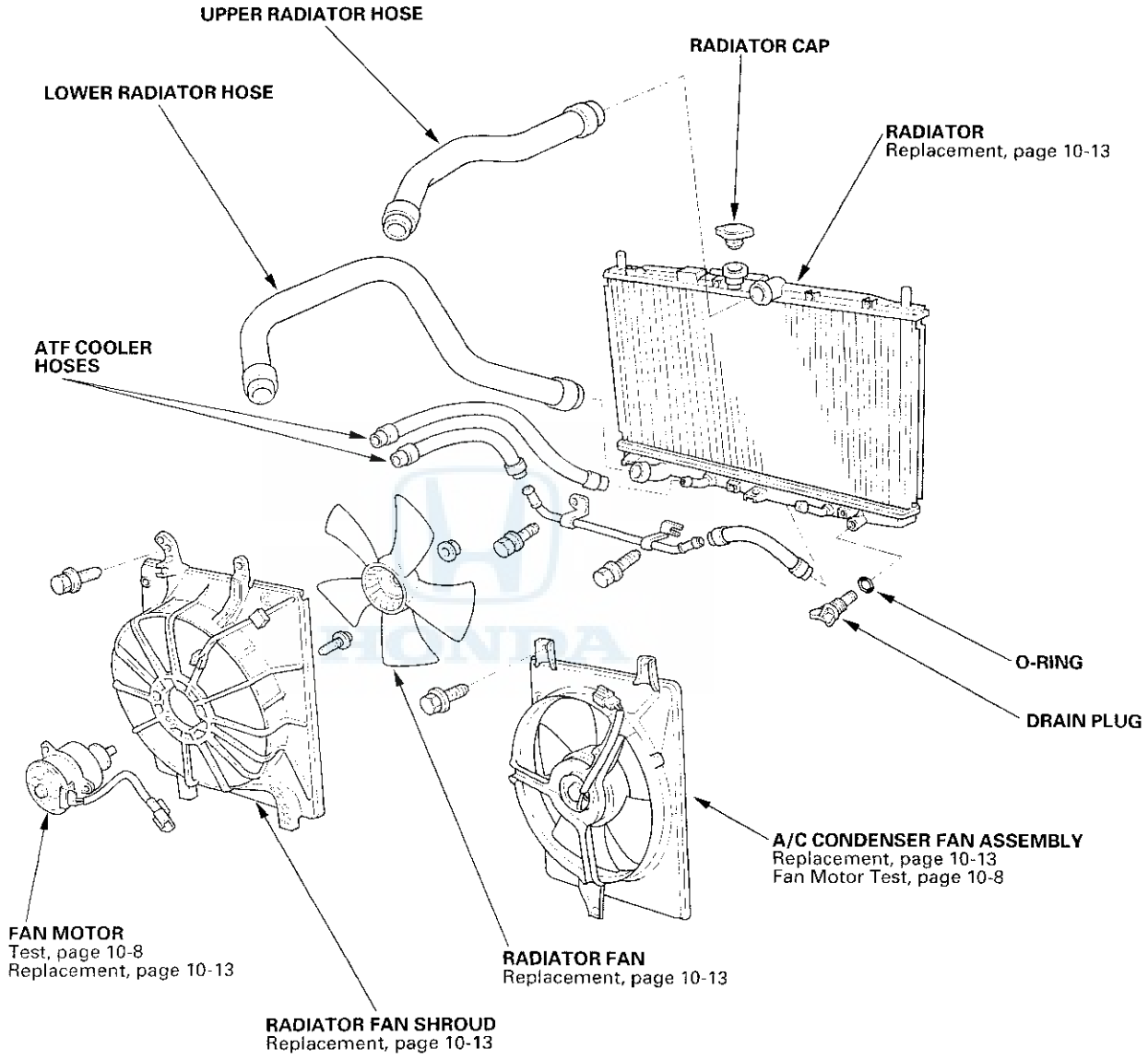

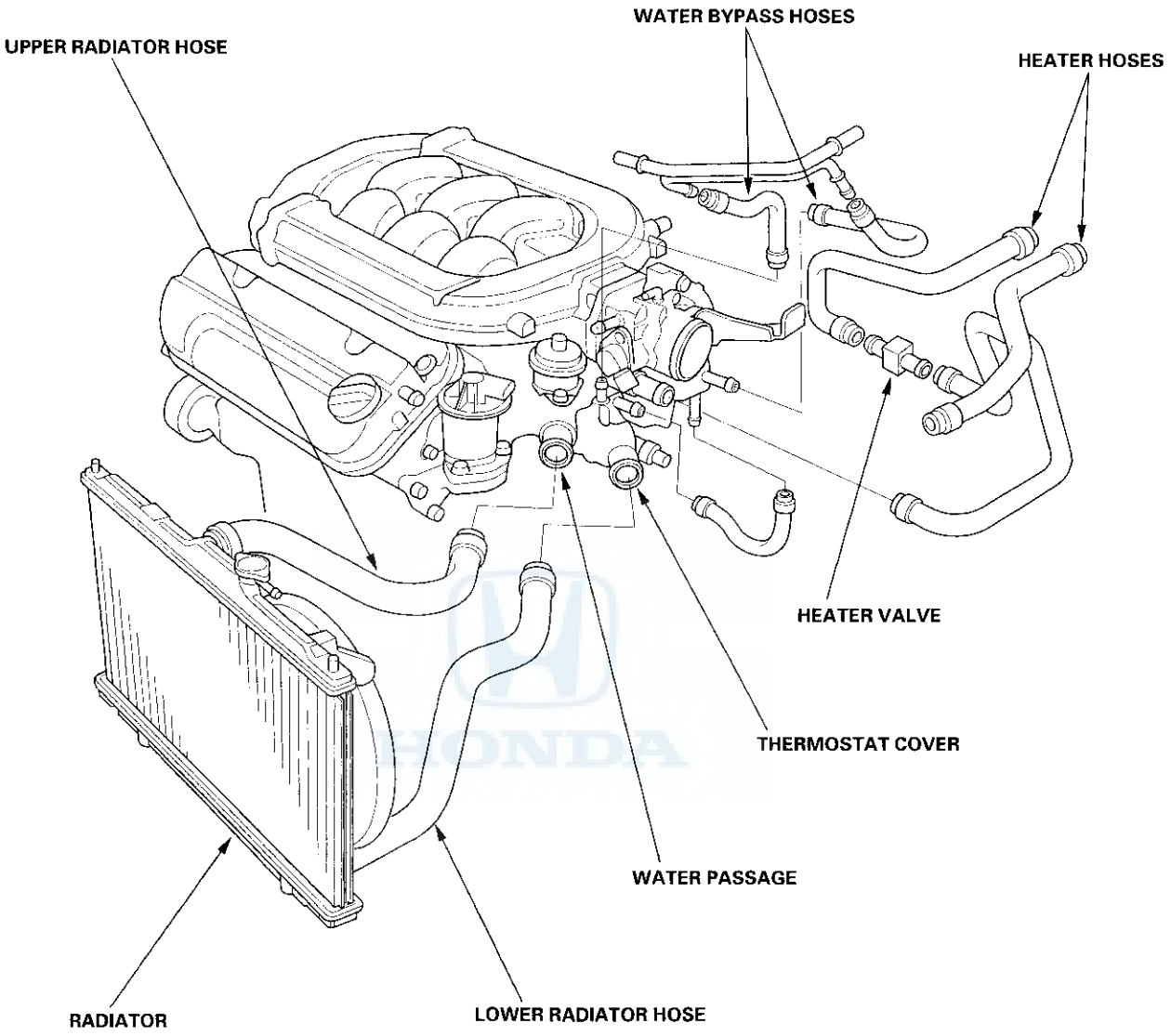
WATER BYPASS HOSES
UPPER RADIATOR HOSE
HEATER HOSES
HEATER VALVE
THERMOSTAT COVER
WATER PASSAGE
RADIATOR
LOWER RADIATOR HOSE

(cont'd)

Component Location Index (cont'd)

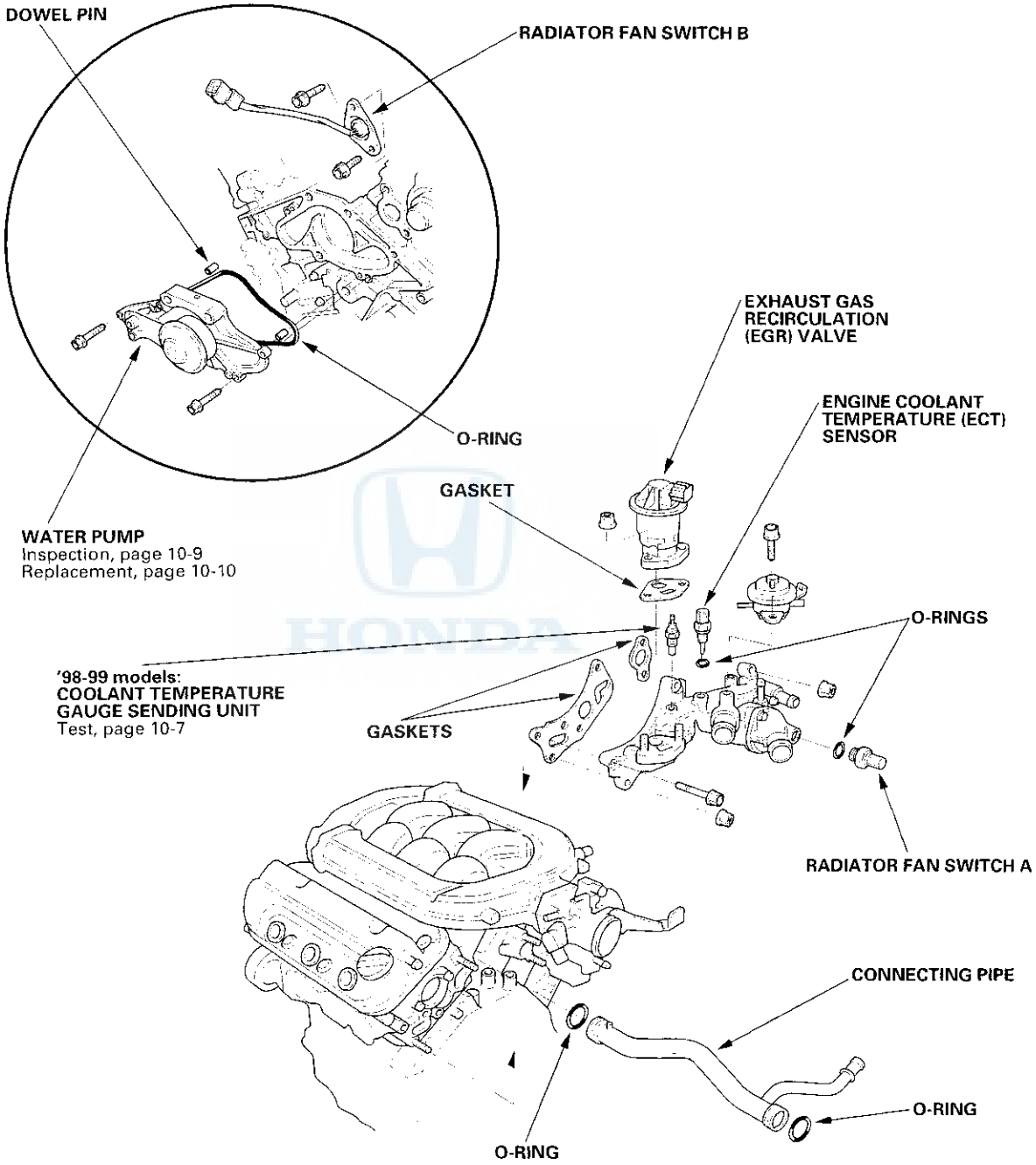

Coolant Temperature Gauge Test

'98-99 models:

1. Check the No. 9 (7.5A) fuse in the under-dash fuse/relay box before testing.

2. Make sure the ignition switch is OFF, then disconnect the YEL/GRN wire (A) from the coolant temperature gauge sending unit (B), and ground it with a jumper wire.

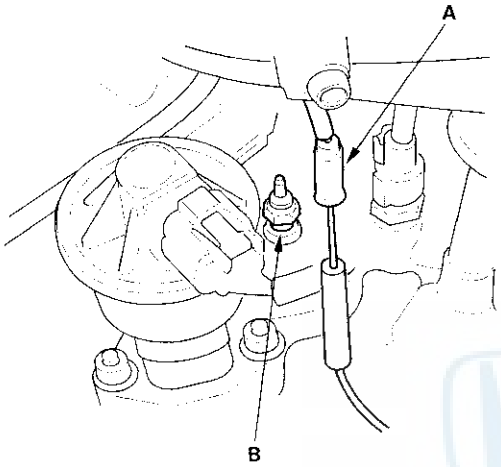

3. Turn the ignition switch ON (II). Check that the pointer of the coolant temperature gauge starts moving toward the "H" mark. Turn the ignition switch OFF before the pointer reaches "H" on the gauge dial. Failure to do so may damage the gauge.

   - If the pointer of the gauge does not move at all, check for an open in the YEL/GRN wire. If the wires are OK, replace the coolant temperature gauge.
   - If the coolant temperature gauge works, test the coolant temperature gauge sending unit.

'00-01 models:

Coolant Temperature Gauge Needle Does Not Move at All

1. Turn the ignition switch OFF, and connect PCM connector terminal A1 to body ground with a jumper wire.

PCM CONNECTOR A (32P)

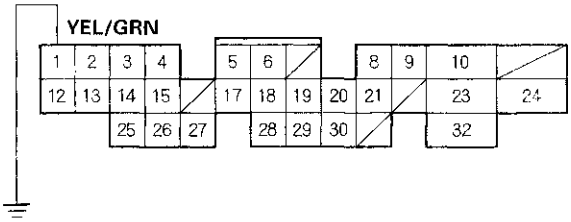

Wire side of female terminals

2. Turn the ignition switch ON (II).

   After 30 seconds or more, does the temperature gauge needle move to the Hot side ?

   YES -- Substitute a known-good PCM and recheck, refer to '98-01 Accord Service Manual (see page 11-5). If the symptom/indication goes away, replace the original PCM.

   NO -- Go to step 3.

3. Turn the ignition switch OFF, and disconnect PCM connector A (32P).

(cont'd)

Coolant Temperature Gauge Test (cont'd)

4. Turn the ignition switch ON (II), and measure voltage between PCM connector terminal A1 and body ground.

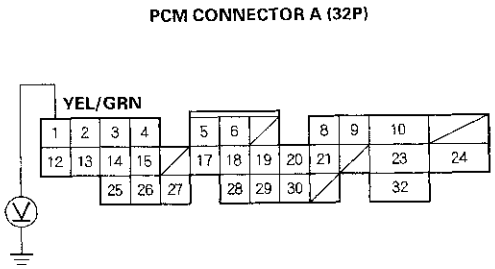

Wire side of female terminals

Is there approx. 5V ?

YES – Replace the fuel and temperature gauge assembly. ■

NO – Go to step 5.

5. Turn the ignition switch ON (II), and measure voltage between PCM connector terminal A1 and body ground.

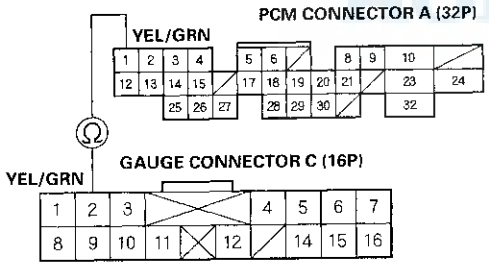

Wire side of female terminals

Is there continuity ?

YES – Replace the fuel and temperature gauge assembly. ■

NO – Repair open in the wire between PCM connector terminal A1 and gauge connector terminal C2. ■

Coolant Temperature Gauge Needle Goes Past the Hot Mark

1. Turn the ignition switch OFF, and disconnect PCM connector A (32P).

2. Turn the ignition switch ON (II).and watch the coolant temperature gauge.

   Does the temperature gauge needle move at all ? (you may have to watch it for about 30 seconds.)

   YES – Go to step 3.
   NO – Substitute a known-good PCM and recheck, refer to '98-01 Accord Service Manual (see page 11-5). If the symptom/indication goes away, replace the original PCM. ■

3. Turn the ignition switch OFF, then turn it ON (II) again, and watch the coolant temperature gauge.

   Does the temperature gauge needle immediately go past the Hot mark ?

   YES – Replace the fuel and temperature gauge assembly. ■
   NO – The temperature gauge needle went past the Hot mark after about 30 seconds or more.Go to step 4.

4. Turn the ignition switch OFF, and disconnect the gauge assembly connector C (16P).
5. Check for continuity between PCM connector terminal aaA1 and gauge assembly connector terminal C2.

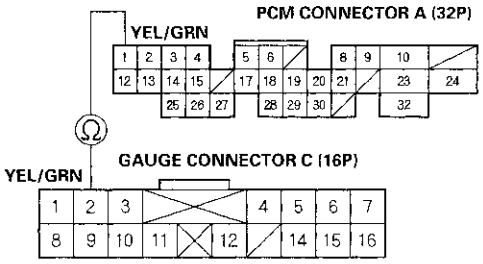

Wire side of female terminals

Is there continuity ?

YES – Replace short in the wire between PCM connector terminal A1 and gauge connector terminal C2. ■
NO – Replace the fuel and temperature gauge assembly. ■

Sending Unit Test

'98-99 models:

1. Disconnect the YEL/GRN wire (A) from the coolant temperature gauge sending unit (B).

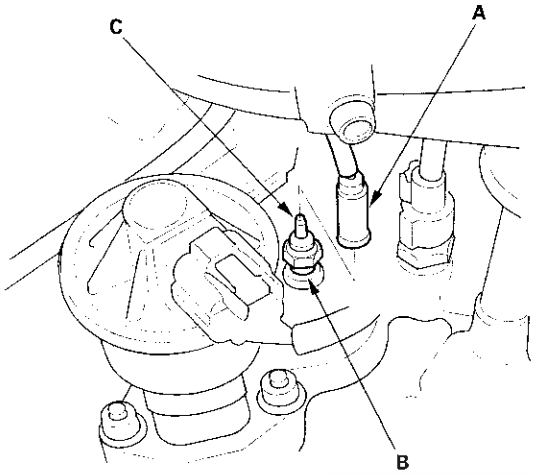

2. Using an ohmmeter, measure the change in resistance between the positive terminal (C) and the engine (ground) with the engine cold and with the engine at operating temperature.

Temperature	133°F (56°C)	185°F (85°C) – 212°F (100°C)
Resistance (Ω)	137	46 – 30

3. If the obtained readings are substantially different from the specifications above, replace the sending unit.

Radiator Cap Test

1. Remove the radiator cap (A), wet its seal with engine coolant, then install it on the pressure tester (B) (commercially available).

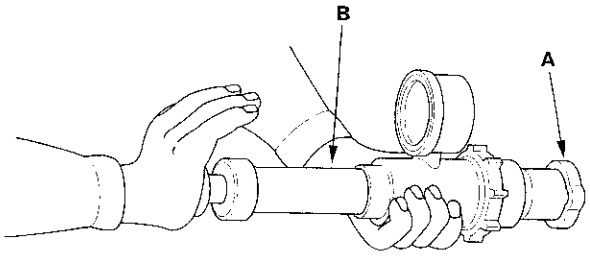

2. Apply a pressure of 93 – 123 kPa (0.95 – 1.25 kgf/cm², 14 – 18 psi).
3. Check for a drop in pressure.
4. If the pressure drops, replace the cap.

Radiator Test

1. Wait until the engine is cool, then carefully remove the radiator cap and fill the radiator with engine coolant to the top of the filler neck.

2. Attach the pressure tester (A) (commercially available) to the radiator and apply a pressure of 93 – 123 kPa (0.95 – 1.25 kgf/cm², 14 – 18 psi).

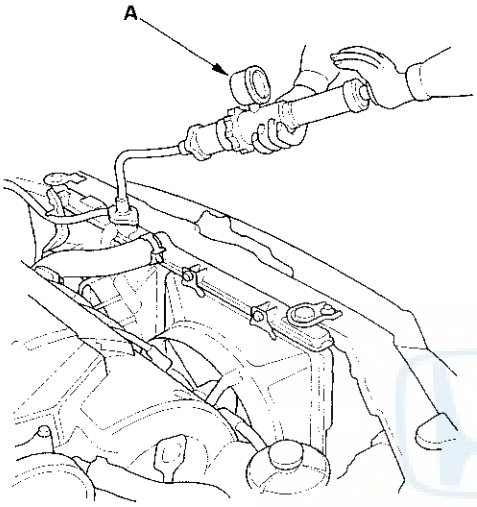

3. Inspect for engine coolant leaks and a drop in pressure.

4. Remove the tester and reinstall the radiator cap.

5. Check for engine oil in the coolant and/or coolant in the engine oil.

Fan Motor Test

1. Disconnect the 2P connectors from the radiator fan motor (A) and condenser fan motor (B).

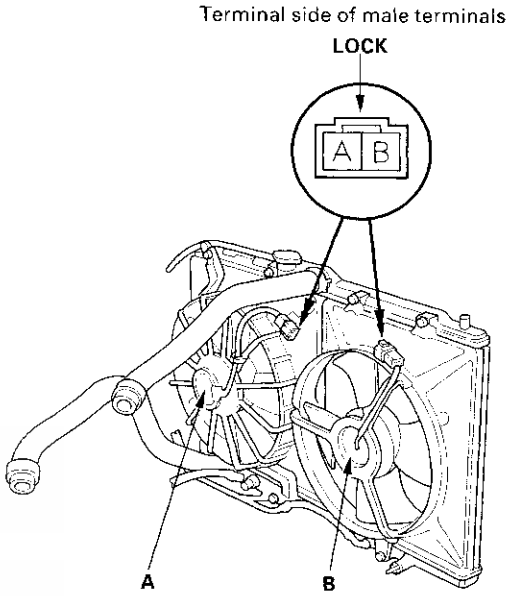

2. Test the motor by connecting battery power to the B terminal, and ground to the A terminal.

3. If the motor fails to run or does not run smoothly, replace it.

Thermostat Test

Replace the thermostat if it is open at room temperature.

To test a closed thermostat:

1. Suspend the thermostat (A) in a container of water. Do not let the thermometer (B) touch the bottom of the hot container.

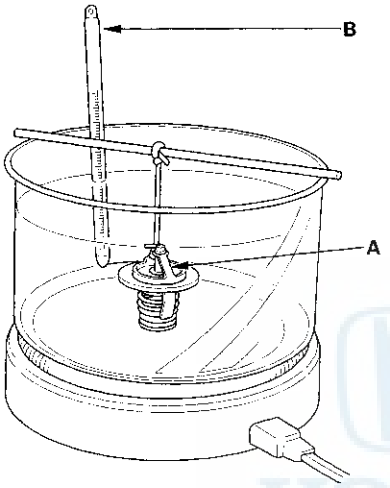

2. Heat the water and check the temperature with a thermometer. Check the temperature at which the thermostat first opens, and at which it is fully open.

3. Measure the lift height of the thermostat when it is fully open.

STANDARD THERMOSTAT

Lift height:	**above 10.0 mm (0.39 in.)**
Starts opening:	
'98-00 models:	**169 – 176°F (76 – 80°C)**
'01 model:	**163 – 171°F (73 – 77°C)**
Fully open:	
'98-00 models:	**194°F (90°C)**
'01 model:	**190°F (88°C)**

Water Pump Inspection

1. Remove the timing belt (see page 6-19).

2. Turn the water pump pulley counterclockwise. Check that it turns freely.

3. Check for signs of seal leakage. A small amount of "weeping" from the bleed holes (A) is normal.

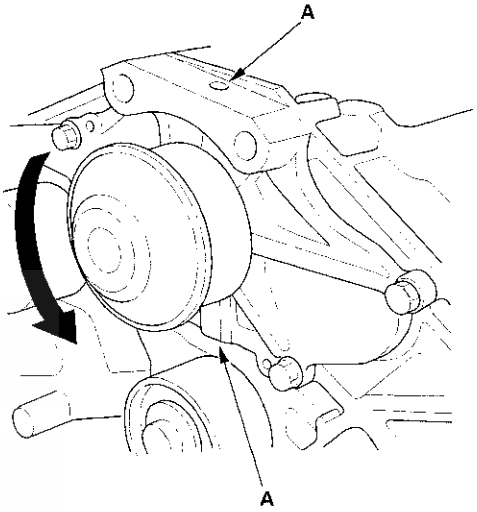

Water Pump Replacement

1. Remove the timing belt (see page 6-19).
2. Remove the timing belt tensioner.
3. Remove the water pump (A) by removing 5 bolts.

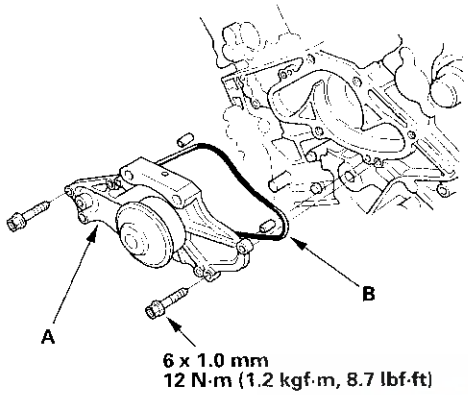

4. Inspect, repair and clean the O-ring groove and mating surface on the cylinder block.
5. Install the water pump with a new O-ring (B) in the reverse order of removal.
6. Clean up any spilled engine coolant.

Coolant Replacement

1. Set the heater temperature control dial to maximum heat. Make sure the engine and radiator are cool to the touch.
2. Remove the radiator cap.
3. Loosen the drain plug (A), and drain the coolant.

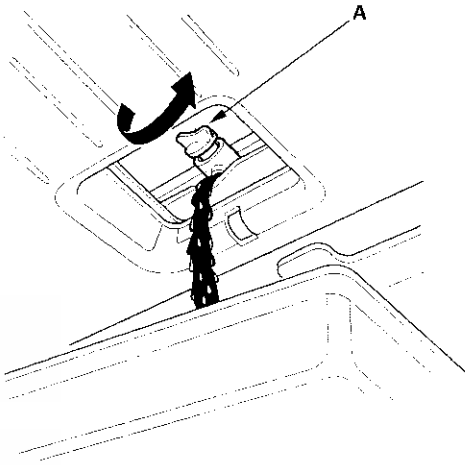

4. Install a rubber hose (A) on the drain bolt (B) located at the rear of the cylinder block, then loosen the drain bolt.

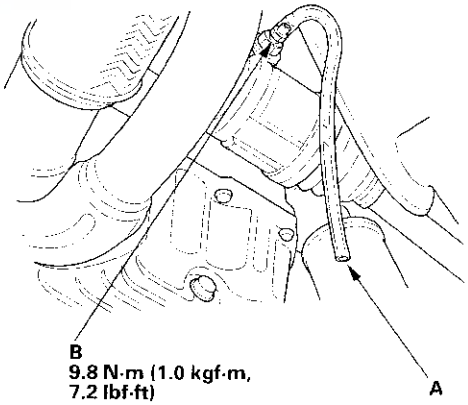

5. When the coolant stops draining, tighten the drain bolt.
6. Tighten the radiator drain plug securely.

7. Remove drain and reinstall the reservoir. Fill the tank to the MAX mark with Honda All Season Antifreeze/Coolant Type 2.

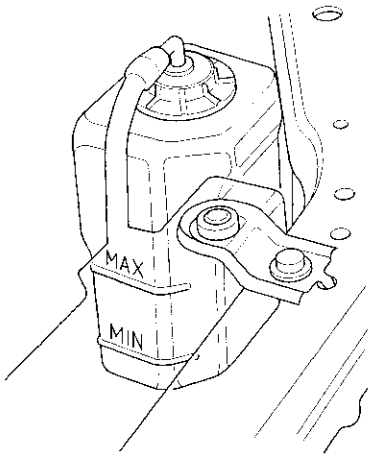

8. Pour Honda All Season Antifreeze/Coolant Type 2 into the radiator up to the base of the filler neck.

   NOTE:
   - Always use Honda All Season Antifreeze/Coolant Type 2. Using a non-Honda coolant can result in corrosion, causing the cooling system to malfunction or fail.
   - Honda All Season Antifreeze/Coolant Type 2 is a mixture of 50 % antifreeze and 50 % water. Pre-mixing is not required.

   Engine Coolant Refill Capacity
   [including the reservoir capacity of (0.6 ℓ (0.6 US qt, 0.5 Imp qt))] :
   5.6 ℓ (5.9 US qt, 4.9 Imp qt)

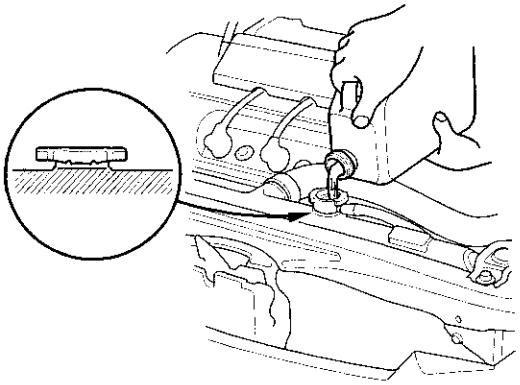

9. Install the radiator cap loosely.

10. Start the engine and let it run until it warms up (the radiator fan comes on at least twice).

11. Turn off the engine. Check the level in the radiator, and add Honda All Season. Antifreeze/Coolant Type 2 if needed.

12. Put the radiator cap on tightly, then run the engine again and check for leaks.

Thermostat Replacement

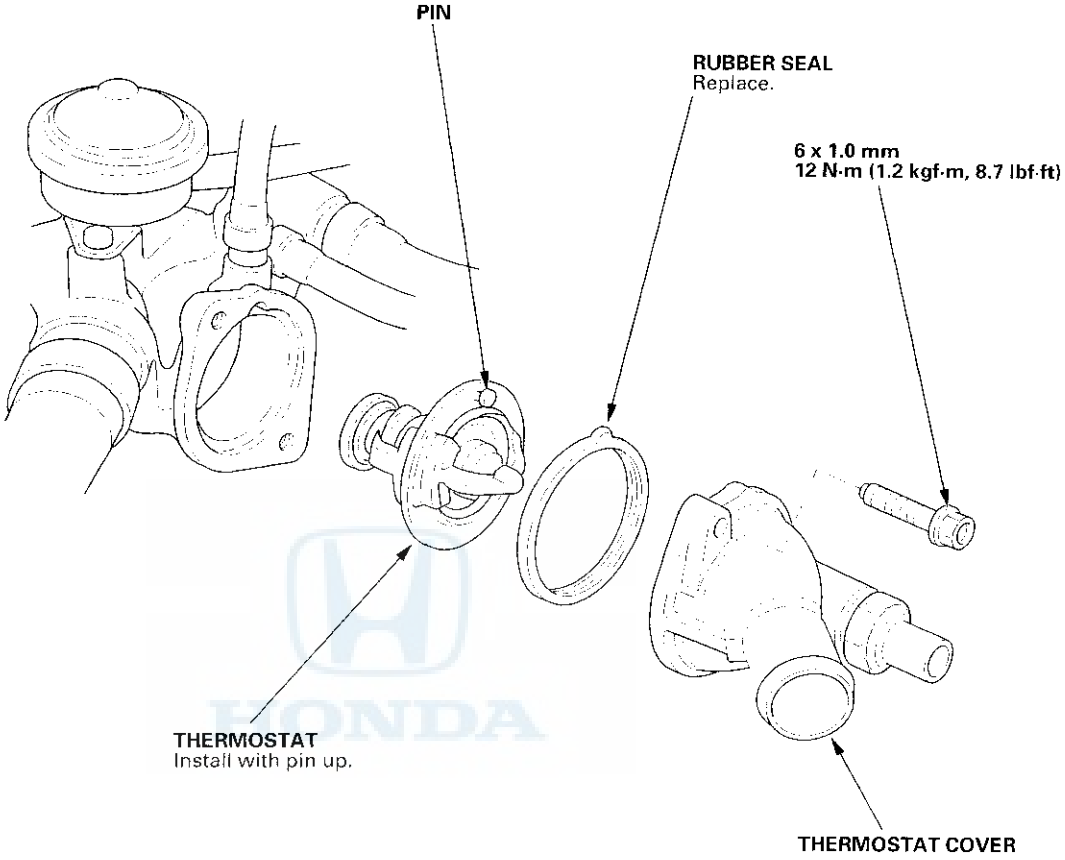

Radiator and Fans Replacement

1. Drain the engine coolant.

2. Remove the upper and lower radiator hoses, and ATF cooler hoses.

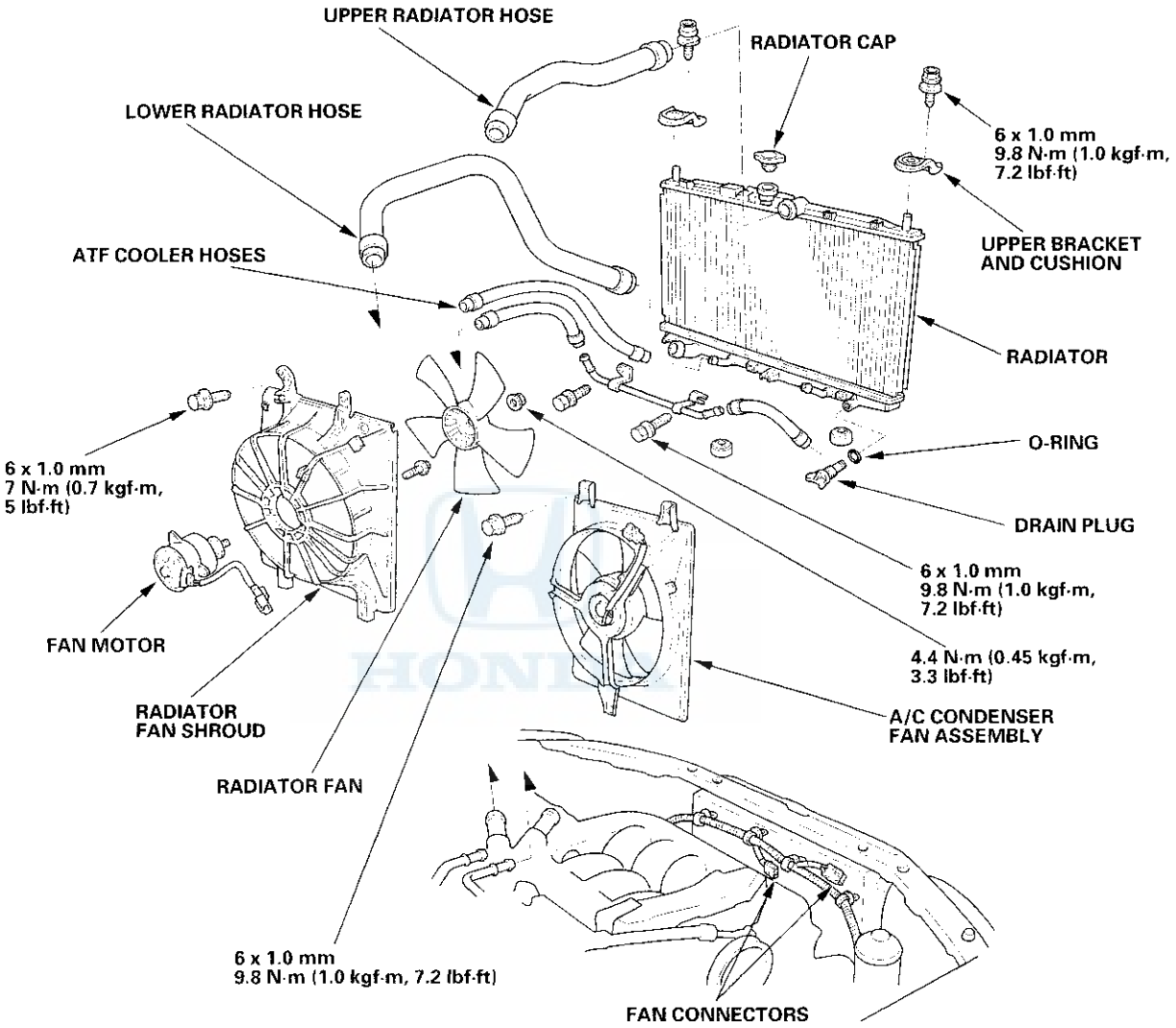

3. Disconnect the fan motor connectors.

4. Remove the radiator upper brackets, then pull up the radiator.

5. Remove the fan shroud assemblies and other parts from radiator.

6. Install the radiator in the reverse order of removal.

7. Set the upper and lower cushions securely.

8. Fill the radiator with engine coolant and bleed the air.

Component Location Index

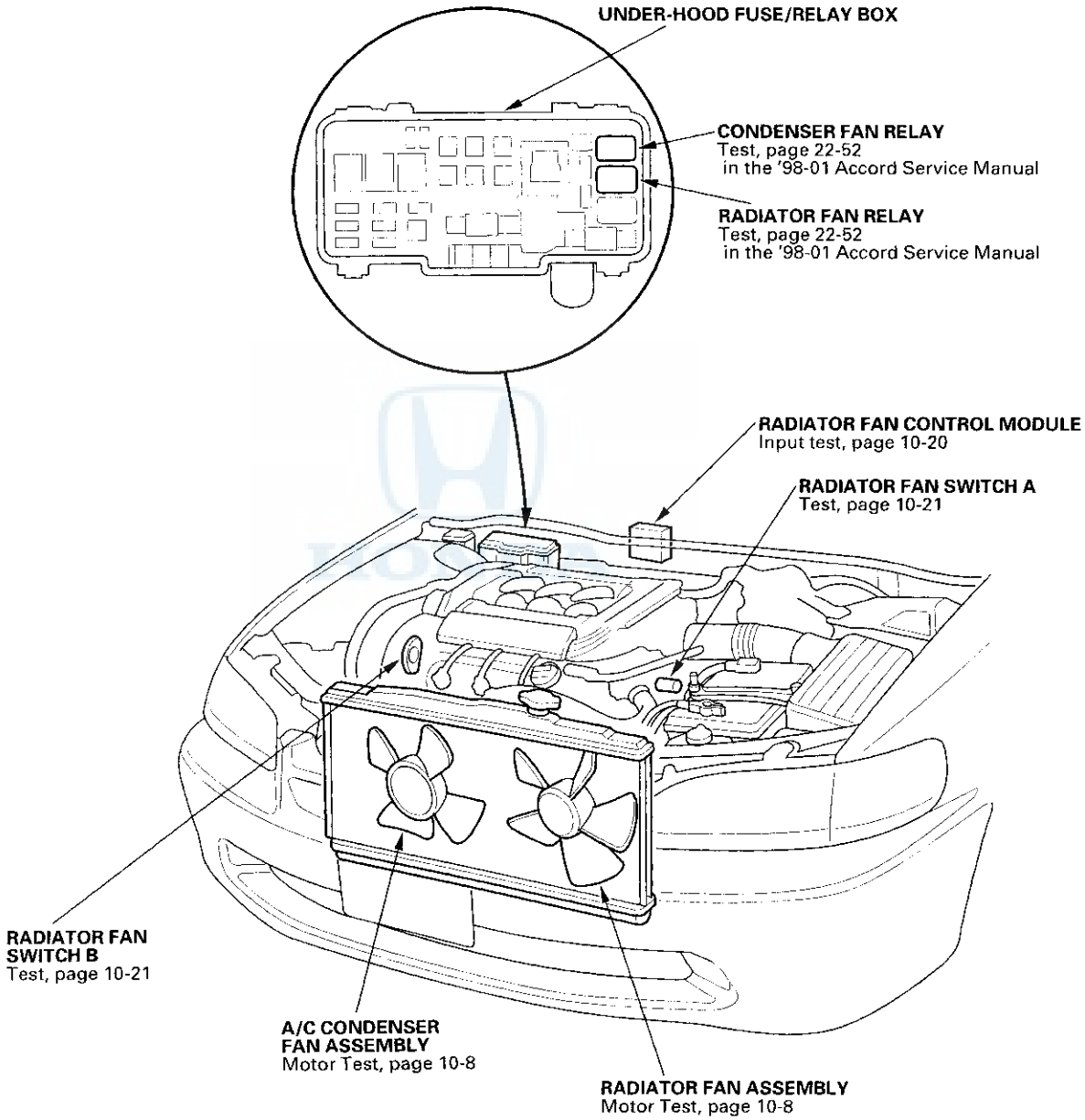

Symptom Troubleshooting Index

Before performing any troubleshooting procedures check:

- Fuses
- Grounds
- Cleanliness and tightness of all connectors

SYMPTOM	PROCEDURE
Radiator fan does not run at all.	Radiator Fan Circuit Troubleshooting (see page 10-17)
Both fans (radiator and condenser) do not run for engine cooling, but they do run with the A/C on.	Radiator Fan Switch A Circuit Troubleshooting (see page 10-19)
Both fans do not run with A/C on.	Radiator and Condenser Fans Common Circuit Troubleshooting, refer to '98-01 Accord Service Manual, (see page 21-14)

Fan Controls

Circuit Diagram

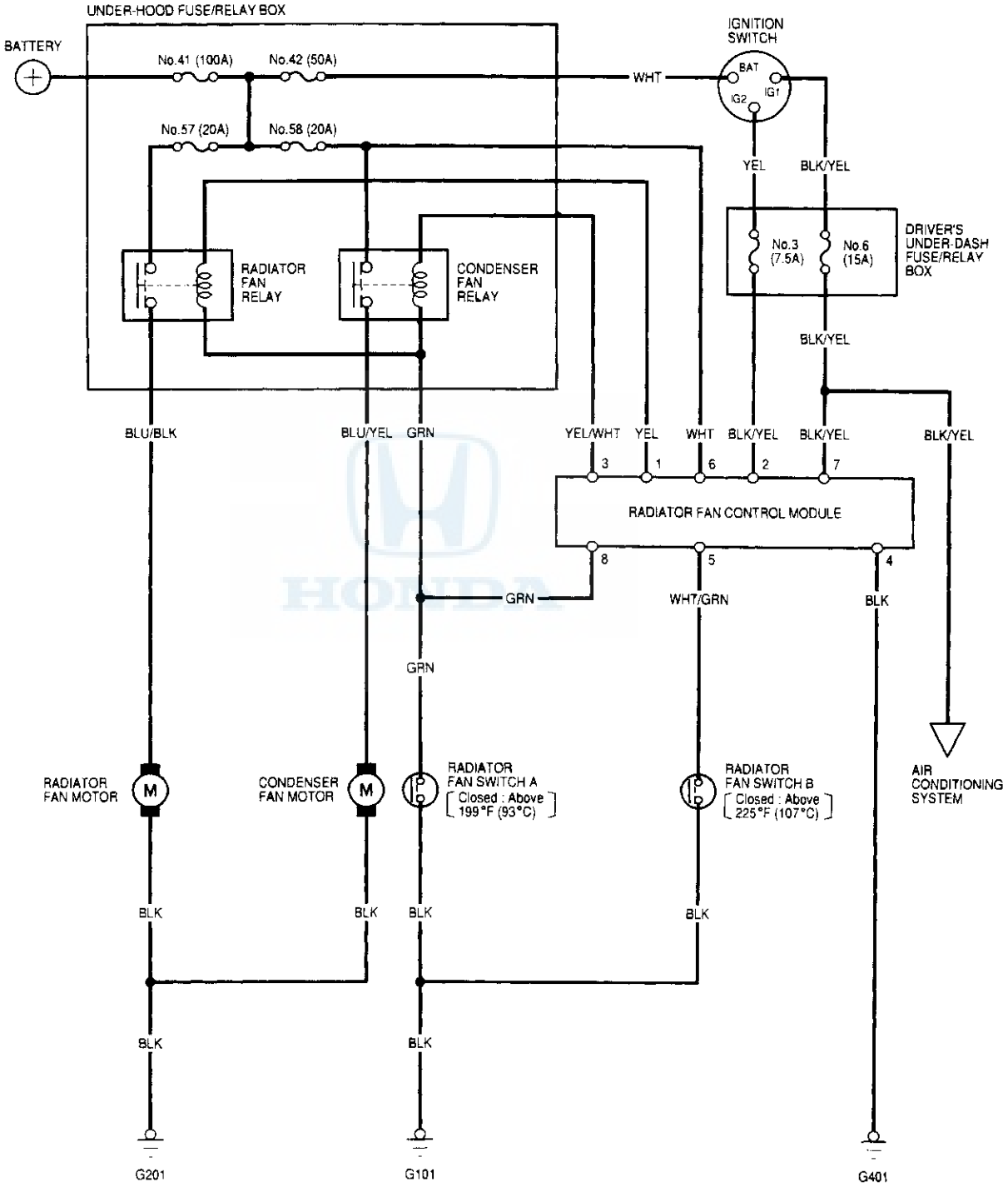

Radiator Fan Circuit Troubleshooting

1. Check the No. 57 (20A) fuse in the under-hood fuse/relay box.

   Is the fuse OK?

   YES Go to step 2.

   NO – Replace the fuse and recheck. ■

2. Remove the radiator fan relay from the under-hood fuse/relay box, and test it. Refer to the '98-01 Accord Service Manual (see page 22-52).

   Is the relay OK?

   YES – Go to step 3.

   NO – Replace the radiator fan relay. ■

3. Measure the voltage between the No. 1 terminal of the radiator fan relay 4P socket and body ground.

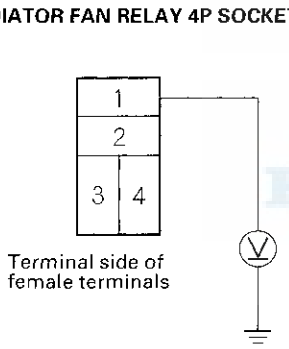

   Is there battery voltage?

   YES – Go to step 4.

   NO Replace the under-hood fuse/relay box. ■

4. Connect the No. 1 and No. 2 terminals of the radiator fan relay 4P socket with a jumper wire.

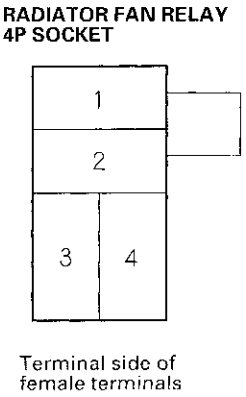

   Does the radiator fan run?

   YES – Go to step 9.

   NO Go to step 5.

5. Disconnect the jumper wire.

6. Disconnect the radiator fan connector.

7. Check for continuity between the No. 2 terminal of the radiator fan relay 4P socket and the No. 2 terminal of the radiator fan connector.

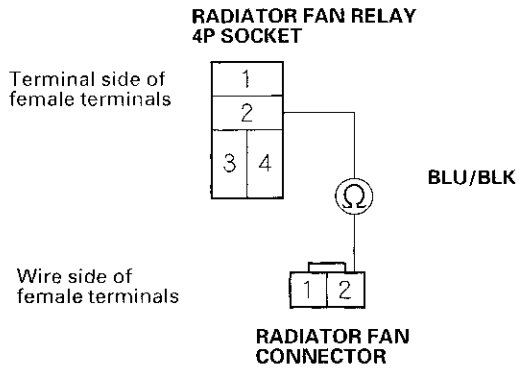

   Is there continuity?

   YES – Go to step 8.

   NO – Repair open in the BLU/BLK wire between the under-hood fuse/relay box and the radiator fan. ■

(cont'd)

Radiator Fan Circuit Troubleshooting (cont'd)

8. Check for continuity between the No. 1 terminal of the radiator fan connector and body ground.

RADIATOR FAN CONNECTOR

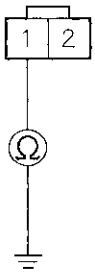

Wire side of female terminals

Is there continuity?

YES—Replace the radiator fan motor. ■

NO—Check for an open in the BLK wire between the radiator fan connector and body ground. If the wire is OK, check for a poor ground at G201. ■

9. Disconnect the jumper wire, and turn the ignition switch on (II).

10. Measure the voltage between No. 3 terminal of the radiator fan relay 4P socket and body ground.

RADIATOR FAN RELAY 4P SOCKET

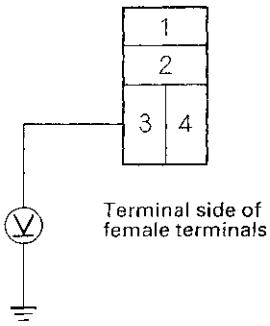

Is there battery voltage?

YES—Replace the under-hood fuse/relay box. ■

NO—Go to step 11.

11. Measure the voltage between the No. 1 terminal of the radiator fan control module and body ground.

RADIATOR FAN CONTROL MODULE 8P CONNECTOR

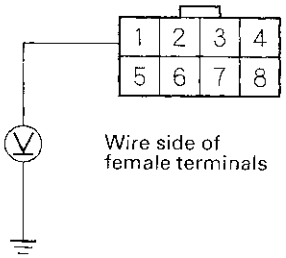

Is there battery voltage?

YES—Repair open in the YEL wire between the under-hood fuse/relay box and the radiator fan control module. ■

NO—Perform the radiator fan control module input tests (see page 10-20). ■

Radiator Fan Switch A Circuit Troubleshooting

1. Disconnect the radiator fan switch A connector.

2. Turn the ignition switch ON (II).

3. Measure the voltage between the No. 2 terminal on the radiator fan switch connector and body ground.

RADIATOR FAN SWITCH CONNECTOR

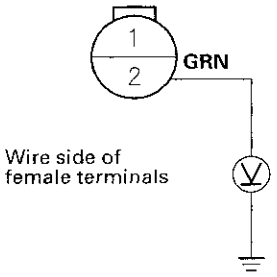

Is there battery voltage?

YES – Go to step 4.

NO – Repair open in the GRN wire between the radiator fan switch A and under-hood fuse/relay box. ■

4. Turn the ignition switch OFF, and check for continuity between the No. 1 terminal on the radiator fan switch A connector and body ground.

RADIATOR FAN SWITCH CONNECTOR

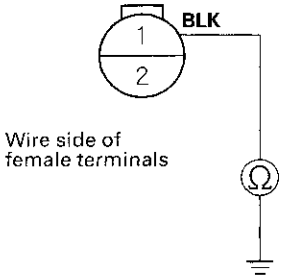

Is there continuity?

YES – Go to step 5.

NO – Check for an open in the BLK wire between the radiator fan switch A connector and body ground. If the wire is OK, check for poor ground at G101. ■

5. Check the cooling system.

Is the cooling system OK?

YES – Replace the radiator fan switch A. ■

NO – Repair the cooling system. ■

Fan Control Module Input Test

Perform the following tests with the radiator fan control module 8P connector connected, the ignition switch ON (II) and the A/C switch OFF.
If you find the cause of a problem, correct it before you continue.

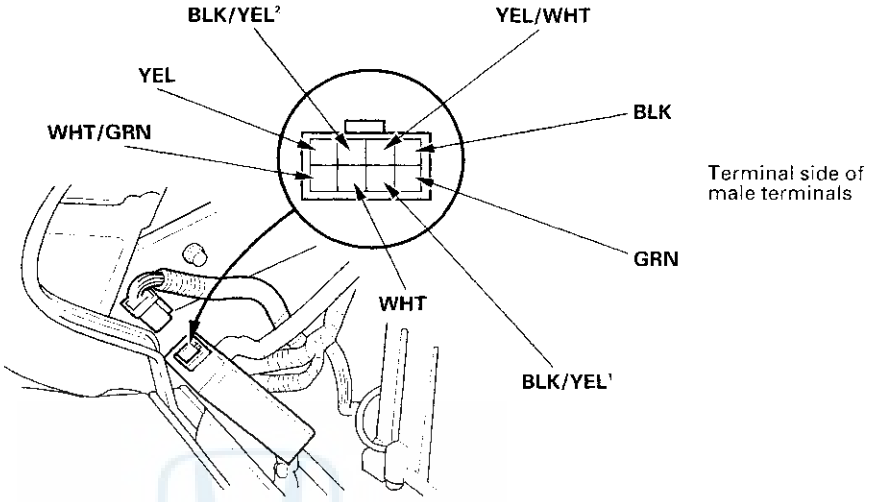

Wire color	Test condition	Desired result	Possible cause if desired result is not obtained
BLK	Check for voltage to body ground.	There should be less than 1V.	• Poor ground (G401) • An open in the wire
WHT	Check for battery voltage to body ground.	There should be battery voltage.	• Blown No. 58 (20 A) fuse in the under-hood fuse/relay box • An open in the wire
BLK/YEL¹	Check battery voltage to body ground: Ignition switch-ON (II)		• Blown No. 6 (15 A) fuse in the under-dash driver's fuse/relay box • An open in the wire
BLK/YEL²	Check battery voltage to body ground: Ignition switch-ON (II)		• Blown No. 3 (7.5 A) fuse in the under-dash driver's fuse/relay box • An open in the wire
YEL/WHT	Check battery voltage to body ground: Ignition switch-ON (II)		• Faulty radiator fan control module • An open in the wire
YEL	Check battery voltage to body ground: Ignition switch-ON (III)		
GRN	Connect body ground: Ignition switch-ON (II)	Radiator fan and condenser fan should come on.	• Faulty radiator fan relay or condenser fan relay • An open in the wire
WHT/GRN	Check for voltage: Engine coolant temperature below 225°F (107°C)	There should be approx. 11 V.	• Faulty radiator fan switch B • Faulty radiator fan control module

Radiator Fan Switch (A or B) Test

NOTE: Bleed air from the cooling system after installing the radiator fan switch (see page 10-10).

1. Remove radiator fan switch A from the water passage and radiator fan switch B from the cylinder head (see page 10-2).

2. Suspend each radiator fan switch (A) in a container of coolant as shown.

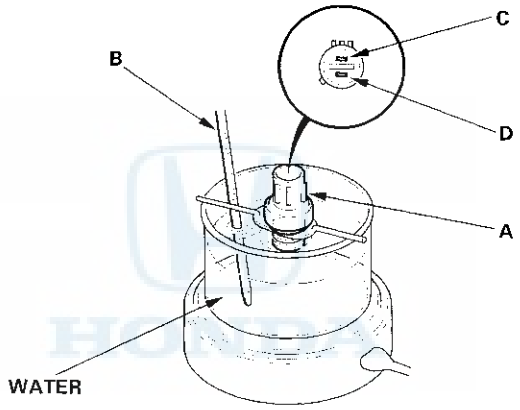

3. Heat the coolant and check the temperature with a thermometer (B). Do not let the thermometer touch the bottom of the hot container.

4. Measure the continuity between the A terminal (C) and B terminal (D) according to the table.

Operation		Temperature	Terminal A	Terminal B
SWITCH A	ON	196—203°F (91—95°C)	○	○
	OFF	5—15°F (3—8°C) lower than the temperature when it goes on		
SWITCH B	ON	217—232°F (103—111°C)	○	○
	OFF	5—23° (3—13°) lower than the temperature when it goes on		

Fuel and Emissions

Fuel and Emissions Systems

PGM-FI System

Idle Control System

Fuel Supply System

Intake Air System

PCV System

EVAP System

Refer to the 1998-01 Accord Service Manual, P/N 61S8008, for the items not shown in this section.

Outline of Accord V6 Model Change

J30A1 engine has been added.

Special Tools

Ref. No.	Tool Number	Description	Qty
①	A973X-041-XXXXX	Vacuum Pump/Gauge, 0 – 30 in.Hg	1
②	07VAJ-0040100	Fuel Pressure Gauge Attachment	1
③	07406-004000A	Fuel Pressure Gauge	1

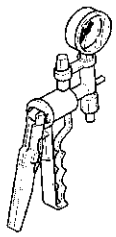

①

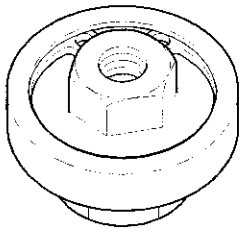

②

③

DTC Troubleshooting Index

DTC (MIL indication*)	Temporary DTC	Detection Item	Note
P0107 (3)	———	Manifold Absolute Pressure (MAP) Circuit Low Voltage	Refer to the '98-01 Accord Service Manual (see page 11-47)
P0108 (3)	———	Manifold Absolute Pressure (MAP) Circuit High Voltage	Refer to the '98-01 Accord Service Manual (see page 11-48)
P0112 (10)	———	Intake Air Temperature (IAT) Circuit Low Voltage	Refer to the '98-01 Accord Service Manual (see page 11-50)
P0113 (10)	———	Intake Air Temperature (IAT) Circuit High Voltage	Refer to the '98-01 Accord Service Manual (see page 11-51)
P0116 (86)	P0116	Engine Coolant Temperature (ECT) Sensor Range/Performance Problem	Refer to the '98-01 Accord Service Manual (see page 11-52)
P0117 (6)	———	Engine Coolant Temperature (ECT) Sensor Circuit Low Voltage	Refer to the '98-01 Accord Service Manual (see page 11-52)
P0118 (6)	———	Engine Coolant Temperature (ECT) Sensor Circuit High Voltage	Refer to the '98-01 Accord Service Manual (see page 11-53)
P0122 (7)	———	Throttle Position (TP) Sensor Circuit Low Voltage	Refer to the '98-01 Accord Service Manual (see page 11-54)
P0123 (7)	———	Throttle Position (TP) Sensor Circuit High Voltage	Refer to the '98-01 Accord Service Manual (see page 11-57)
P0131 (1)	———	Primary Heated Oxygen Sensor (Primary HO2S) (Sensor 1) Circuit Low Voltage	(see page 11-55)
P0132 (1)	———	Primary Heated Oxygen Sensor (Primary HO2S) (Sensor 1) Circuit High Voltage	(see page 11-56)
P0133 (61)	P0133	Primary Heated Oxygen Sensor (Primary HO2S) (Sensor 1) Slow Response	(see page 11-57)
P0135 (41)	———	Primary Heated Oxygen Sensor (Primary HO2S) (Sensor 1) Heater Circuit Malfunction	(see page 11-61)
P0137 (63)	P0136	Secondary Heated Oxygen Sensor (Secondary HO2S) (Sensor 2) Circuit Low Voltage	(see page 11-58)
P0138 (63)	P0136	Secondary Heated Oxygen Sensor (Secondary HO2S) (Sensor 2) High Voltage	(see page 11-59)
P0139 (63)	P0136	Secondary Heated Oxygen Sensor (Secondary HO2S) (Sensor 2) Slow Response	(see page 11-60)
P0141 (65)	———	Secondary Heated Oxygen Sensor (Secondary HO2S) (Sensor 2) Heater Circuit Malfunction	(see page 11-61)
P0171 (45)	P0170	Fuel System Too Lean	Refer to the '98-01 Accord Service Manual (see page 11-69)
P0172 (45)	P0170	Fuel System Too Rich	Refer to the '98-01 Accord Service Manual (see page 11-69)
P0300 and some of P0301 (71) P0302 (72) P0303 (73) P0304 (74) P0305 (75) P0306 (76)	P1399	Random Misfire	(see page 11-63)

*: These DTCs will be indicated by the blinking of the Malfunction Indicator Lamp (MIL) when the SCS service signal line is jumped with the Honda PGM Tester.
**: The D4 indicator light and the MIL may come on simultaneously.

(cont'd)

DTC Troubleshooting Index (cont'd)

DTC (MIL indication*)	Temporary DTC	Detection Item	Note
P0301 (71)	P1339	No. 1 Cylinder Misfire	*1: (see page 11-64) *2: (see page 11-68)
P0302 (72)	P1339	No. 2 Cylinder Misfire	*1: (see page 11-64) *2: (see page 11-68)
P0303 (73)	P1339	No. 3 Cylinder Misfire	*1: (see page 11-64) *2: (see page 11-68)
P0304 (74)	P1339	No. 4 Cylinder Misfire	*1: (see page 11-64) *2: (see page 11-68)
P0305 (75)	P1339	No. 5 Cylinder Misfire	*1: (see page 11-64) *2: (see page 11-68)
P0306 (76)	P1339	No. 6 Cylinder Misfire	*1: (see page 11-64) *2: (see page 11-68)
P0335 (4)	——	Crankshaft Position (CKP) Sensor No Signal	(see page 11-73)
P0336 (4)	——	Crankshaft Position (CKP) Sensor Intermittent Interruption	(see page 11-73)
P0401 (80)	P0401	Exhaust Gas Recirculation (EGR) Insufficient Flow	Refer to the '98-01 Accord Service Manual (see page 11-136)
P0420 (67)	P0420	Catalyst System Efficiency Below Threshold	Refer to the '98-01 Accord Service Manual (see page 11-135)
P0451 (91)*1	P0451	Fuel Tank Pressure (FTP) Sensor Range/ Performance Problem	Refer to the '98-01 Accord Service Manual (see page 11-143)
P0452 (91)	P0450	Fuel Tank Pressure (FTP) Sensor Circuit Low Voltage	Refer to the '98-01 Accord Service Manual (see page 11-144)
P0453 (91)	P0450	Fuel Tank Pressure (FTP) Sensor Circuit High Voltage	Refer to the '98-01 Accord Service Manual (see page 11-145)
P0505 (14)	P0505	Idle Control System Malfunction	Refer to the '98-01 Accord Service Manual (see page 11-99)
P0560 (34)	——	Powertrain Control Module (PCM) Back up Circuit Low Voltage	Refer to the '98-01 Accord Service Manual (see page 11-76)
P0700** (70) P0715** (70) P0720** (70) P0730** (70) P0740** (70) P0753** (70) P0758** (70) P0763** (70) P0780** (70)	——	Automatic Transaxle System Malfunction	Refer to the Automatic Transmission DTC Troubleshooting Index
P1106 (13)	P1106	Barometric Pressure (BARO) Sensor Range/Performance Problem	Refer to the '98-01 Accord Service Manual (see page 11-77)
P1107 (13)	——	Barometric Pressure (BARO) Sensor Circuit Low Input	Refer to the '98-01 Accord Service Manual (see page 11-77)
P1108 (13)	——	Barometric Pressure (BARO) Sensor Circuit High Input	Refer to the '98-01 Accord Service Manual (see page 11-77)
P1121 (7)	P1121	Throttle Position (TP) Sensor Lower Than Expected	(see page 11-75)

*: These DTCs will be indicated by the blinking of the Malfunction Indicator Lamp (MIL) when the SCS service signal line is jumped with the Honda PGM Tester.
**: The D4 indicator light and the MIL may come on simultaneously.
*1: '98-99 models
*2: '00-01 models

DTC (MIL indication*)	Temporary DTC	Detection Item	Page
P1122 (7)	P1122	Throttle Position (TP) Sensor Higher Than Expected	(see page 11-75)
P1128 (5)	P1128	Manifold Absolute Pressure (MAP) Sensor Lower Than Expected	Refer to the '98-01 Accord Service Manual (see page 11-49)
P1129 (5)	P1129	Manifold Absolute Pressure (MAP) Sensor Higher Than Expected	Refer to the '98-01 Accord Service Manual (see page 11-49)
P1259 (22)	———	VTEC System Malfunction	(see page 6-6)
P1297 (20)	———	Electrical Load Detector (ELD) Circuit Low Voltage	Refer to the '98-01 Accord Service Manual (see page 11-84)
P1298 (20)	———	Electrical Load Detector (ELD) Circuit High Voltage	Refer to the '98-01 Accord Service Manual (see page 11-85)
P1361 (8)	———	Top Dead Center (TDC) 1 Sensor Intermittent Interruption	(see page 11-76)
P1362 (8)	———	Top Dead Center Sensor (TDC) 1 No Signal	(see page 11-76)
P1366 (58)	———	Top Dead Center Sensor (TDC) 2 Intermittent Interruption	(see page 11-76)
P1367 (58)	———	Top Dead Center Sensor (TDC) 2 No Signal	(see page 11-76)
P1456 (90)	P1456 (90)	Evaporative Emission (EVAP) Control System Leakage (Fuel Tank System)	Refer to the '98-01 Accord Service Manual (see page 11-147)
P1457 (90)	P1457 (90)	Evaporative Emission (EVAP) Control System Leakage (EVAP Canister System)	Refer to the '98-01 Accord Service Manual (see page 11-152)
P1491 (12)	P1491 (12)	Exhaust Gas Recircuration (EGR) Valve Insufficient Lift	Refer to the '98-01 Accord Service Manual (see page 11-136)
P1498 (12)	———	Exhaust Gas Recircuration (EGR) Valve Position Sensor Circuit High Voltage	Refer to the '98-01 Accord Service Manual (see page 11-140)
P1519 (14)	———	Idle Air Control (IAC) Valve Circuit Malfunction	Refer to the '98-01 Accord Service Manual (see page 11-100)
P1607 (—)	———	Powertrain Control Module (PCM) Internal Circuit Malfunction	Refer to the '98-01 Accord Service Manual (see page 11-90)
P1676 (35)*3	———	FPTDR Signal Line Malfunction	(see page 11-78)
P1678 (35)*3	———	FPTDR Signal Line Malfunction	(see page 11-78)
P1705** (70)	———	Automatic Transaxle System Malfunction	Refer to the Automatic Transmission DTC Troubleshooting Index
P1706** (70)	P1706		
P1738** (70) P1739** (70) P1750** (70) P1751** (70) P1753** (70) P1768** (70) P1773** (70)			

*: These DTCs will be indicated by the blinking of the Malfunction Indicator Lamp (MIL) when the SCS service signal line is jumped with the Honda PGM Tester.
**: The D4 indicator light and the MIL may come on simultaneously.
*3: '01 model

Symptom Troubleshooting Index

These symptoms DO NOT trigger Diagnostic Trouble Codes (DTCs) and cause the Malfunction Indicator Lamp (MIL) to come on. If the MIL is reported on, check for DTCs. If the vehicle has one of these symptoms, do the diagnostic procedure for it, in the sequence listed, until you find the cause.

Symptom	Diagnostic procedure	Also check for
Engine will not start (MIL works OK, no DTCs set)	1. Test the battery (see page 22-30). 2. Test the starter (see page 4-7). 3. Test the fuel pump, refer to the '98-01 Accord Service Manual (see page 11-115). 4. Test the ignition wires for '98-99 models (see page 4-22). 5. Test the ignition coil for '98-99 models (see page 4-22), or for '00-01 models (see page 4-23). 6. Check the ignition control module (ICM) inputs for '98-99 models (see page 4-21). 7. Troubleshoot the PGM-FI main relay circuit, refer to the '98-01 Accord Service Manual (see page 11-110).	• Low compression • Intake air leaks • Locked up engine • Slipped/ broken timing bolt • Contaminated fuel
Engine will not start (MIL comes on and stays on, or never comes on at all, no DTCs set)	Troubleshoot the MIL circuit, refer to the '98-01 Accord Service Manual (see page 11-91).	
Engine will not start (immobilizer indicator light comes on)	Troubleshoot the immobilizer system, refer to the '98-01 Accord Service Manual (see page 22-204).	
Hard starting (MIL works OK, no DTCs set)	1. Test the battery (see page 22-30). 2. Check the fuel pressure (see page 11-89). 3. Test the ignition wires for '98-99 models (see page 4-22). 4. Test the ignition coil for '98-99 models (see page 4-22), or for '00-01 models (see page 4-23). 5. Check the ignition control module (ICM) input for '98-99 models (see page 4-21).	• Low compression • Intake air leaks • Contaminated fuel
Cold fast idle too low (MIL works OK, no DTCs set)	Check/adjust the idle speed (see page 11-86).	
Cold fast idle too high (MIL works OK, no DTCs set)	1. Check/adjust the idle speed (see page 11-86). 2. Inspect/adjust the throttle cable (see page 11-98). 3. Inspect and test the throttle body (see page 11-96).	
Idle speed fluctuates (MIL works OK, no DTCs set)	1. Check/adjust the idle speed (see page 11-86). 2. Inspect/adjust the throttle cable (see page 11-98). 3. Inspect and test the throttle body (see page 11-96).	Intake air leaks
Low power (MIL works OK, no DTCs set)	1. Check the fuel pressure (see page 11-89). 2. Inspect and test the throttle body (see page 11-96). 3. Inspect/adjust the throttle cable (see page 11-98).	Low compression
Engine stalls (MIL works OK, no DTCs set)	1. Check the fuel pressure (see page 11-89). 2. Test the ignition wires for '98-99 models (see page 4-22). 3. Check/adjust the idle speed (see page 11-86). 4. Troubleshoot the brake switch signal circuit.	• Intake air leaks • Faulty harness and sensor connectors
Difficult to refuel (MIL works OK, no DTCs set)	1. Test the fuel tank vapor control valve, refer to the '98-01 Accord Service Manual (see page 11-159). 2. Inspect the fuel tank signal tube between the fuel pipe and the fuel tank vapor control valve. 3. Inspect the fuel tank vapor vent tube between the EVAP control canister and the fuel tank vapor control valve. 4. Check the EVAP canister, refer to the '98-01 Accord Service Manual (see page 11-136).	
Fuel overflows during refueling (No DTCs set)	Replace the fuel tank vapor control valve, refer to the '98-01 Accord Service Manual (see page 11-161).	

System Descriptions

Electronic Control System

The functions of the fuel and emission control systems are managed by the Powertrain Control Module (PCM).

Fail-safe Function
When an abnormality occurs in a signal from a sensor, the PCM ignores that signal and assumes a pre-programmed value for that sensor that allows the engine to continue to run.

Back-up Function
When an abnormality occurs in the PCM, the injectors are controlled by a back-up circuit independent of the system in order to permit minimal driving.

Self-diagnosis
When an abnormality occurs in the signal from a sensor, the PCM supplies ground for the Malfunction Indicator Lamp (MIL) and stores the Diagnostic Trouble Code (DTC) in erasable memory. When the ignition is first turned on, the PCM supplies ground for the MIL for 2 seconds to check the MIL bulb condition.

Two Driving Cycle Detection Method
To prevent false indications, the "two driving cycle detection method" is used for some self-diagnostic functions. When an abnormality occurs, the PCM stores it in its memory. When the same abnormality recurs after the ignition switch is turned OFF and ON (II) again, the PCM informs the driver by turning on the MIL.

(cont'd)

System Descriptions (cont'd)

PCM Data

You can retrieve data from the PCM by connecting the OBD II scan tool or the Honda PGM Tester to the Data Link Connector (DLC). The items listed in the table below conform to SAE recommended practice. The Honda PGM Tester also reads data beyond that recommended by SAE. Understanding this data may help you find the causes of intermittent problems.

NOTE:
- The "operating values" listed are approximate and may vary depending on the environment and the individual vehicle.
- Unless noted otherwise, "at idle speed" means idling with the engine completely warmed up, transmission in Park or neutral and the A/C and all accessories turned off.

Data	Description	Operating Value	Freeze Data
Diagnostic Trouble Code (DTC)	If the PCM detects a problem, it will store it as a code consisting of one letter and four numbers. Depending on the problem, an SAE-defined code (P0xxx) or a Honda-defined code (P1xxx) will be output to the tester.	If no problem is detected, there is no output.	YES
Engine Speed	The PCM computes engine speed from the signals sent from the Crankshaft Position (CKP) sensor. This data is used for determining the time and amount of fuel injection.	Nearly the same as tachometer indication At idle speed: 680±50 rpm	YES
Vehicle Speed	The PCM converts pulse signals from the countershaft speed sensor into speed data.	Nearly the same as speedometer indication	YES
Manifold Absolute Pressure (MAP)	The absolute pressure caused in the intake manifold by engine load and speed.	With engine stopped: Nearly the same as atmospheric pressure At idle speed: 20–34 kPa (150–260 mmHg, 6–10 in.Hg)	YES
Engine Coolant Temperature (ECT)	The ECT sensor converts coolant temperature into voltage and signals the PCM. The sensor is a thermistor whose internal resistance changes with coolant temperature. The PCM uses the voltage signals from the ECT sensor to determine the amount of injected fuel.	With cold engine: Same as ambient temperature and IAT With engine warmed up: approx. 176–212°F (80–100°C)	YES
Primary Heated Oxygen Sensor (Primary HO2S) (Sensor 1), Secondary Heated Oxygen Sensor (Secondary HO2 S) (Sensor 2)	The HO2S detects the oxygen content in the exhaust gas and sends voltage signals to the PCM. Based on these signals, the PCM controls the air/fuel ratio. When the oxygen content is high (that is, when the ratio is leaner than the stoichiometric ratio), the voltage signal is lower. When the oxygen content is low (that is, when the ratio is richer than the stoichiometric ratio), the voltage signal is higher.	0.0–1.25 V At idle speed: about 0.1–0.9 V	NO

Data	Description	Operating Valve	Freeze Data
Fuel System	Fuel system status is indicated as "open" or "closed". Closed: Based on the HO2S output, the PCM determines the air/fuel ratio and controls the amount of injected fuel. Open: ignoring HO2S output, the PCM refers to signals from the Throttle Position (TP), Manifold Absolute Pressure (MAP), Intake Air Temperature (IAT), Barometic Pressure (BARO) and Engine Coolant Temperature (ECT) sensors to control the amount of injected fuel.	At idle speed: closed	YES
Short Term Fuel Trim	The air/fuel ratio correction coefficient for correcting the amount of injected fuel when Fuel System Status is "closed". When the ratio is leaner than the stoichiometric ratio, the PCM increases short tern fuel trim gradually, and the amount of injected fuel increases. The air/fuel ratio gradually gets richer, causing a lower oxygen content in the exhaust gas. Consequently, the short term fuel trim is lowered, and the PCM reduces the amount of injected fuel. This cycle keeps the air/fuel ratio close to the stoichiometric ratio when in closed loop status.	0.73—1.47	YES
Long Term Fuel Trim	Long term fuel trim is computed from short term fuel trim and indicates changes occuring in the fuel supply system over a long period. If long term fuel trim is higher than 1.00, the amount of injected fuel must be increased. If it is lower than 1.00, the amount of injected fuel must be reduced.	0.81—1.19	YES
Intake Air Temperature (IAT)	The IAT sensor converts intake air temperature into voltage and signals the PCM. When intake air temperature is low, the internal resistance of the sensor increases, and the voltage signal is higher.	With cold engine: Same as ambient temperature and ECT	YES
Throttle Position	Based on the accelerator pedal position, the opening angle of the throttle valve is indicated.	At idle speed: approx. 10%	YES
Ignition Timing	Ignition timing is the ignition advance angle set by the PCM. The PCM matches ignition timing to the driving conditions.	At idle speed: 10° ± 2° BTDC with the SCS service signal jumped.	NO
Calculated Load Value (CLV)	CLV is the engine load calculated from the MAP data.	At idle speed: 16 – 33% At 2,500 rpm with no load: 17 – 25%	YES

(cont'd)

System Descriptions (cont'd)

PCM Electrical Connections (cont'd)

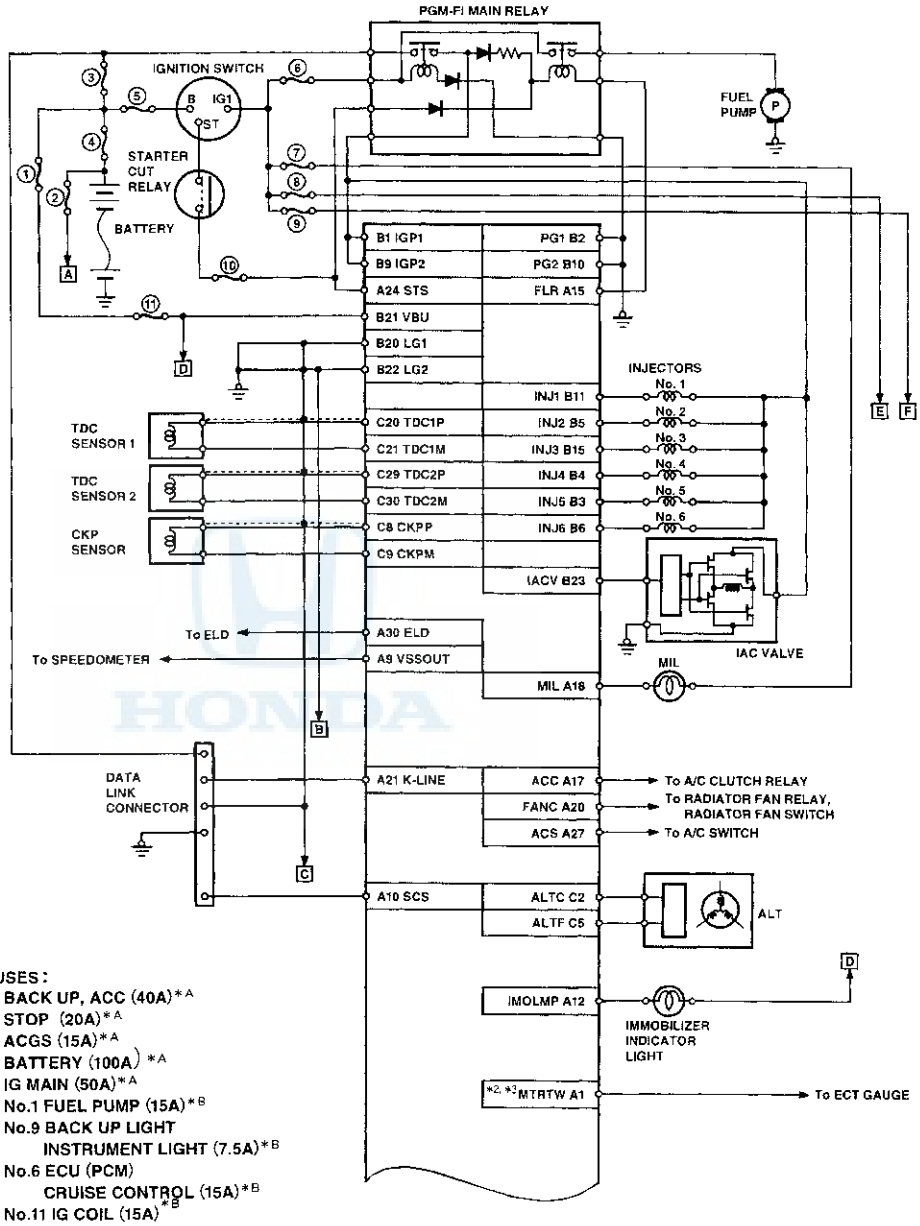

FUSES:
① BACK UP, ACC (40A)*A
② STOP (20A)*A
③ ACGS (15A)*A
④ BATTERY (100A) *A
⑤ IG MAIN (50A)*A
⑥ No.1 FUEL PUMP (15A)*B
⑦ No.9 BACK UP LIGHT
INSTRUMENT LIGHT (7.5A)*B
⑧ No.6 ECU (PCM)
CRUISE CONTROL (15A)*B
⑨ No.11 IG COIL (15A)*B
⑩ No.13 STARTER SIGNAL (7.5A)*B
⑪ No.13 CLOCK BACKUP (7.5A)*C
*A: in the under-hood fuse/relay box
*B: in the driver's under-dash fuse/relay box
*C: in the passenger's under-dash fuse/relay box

*1: '98–99 models
*2: '00 model
*3: '01 model

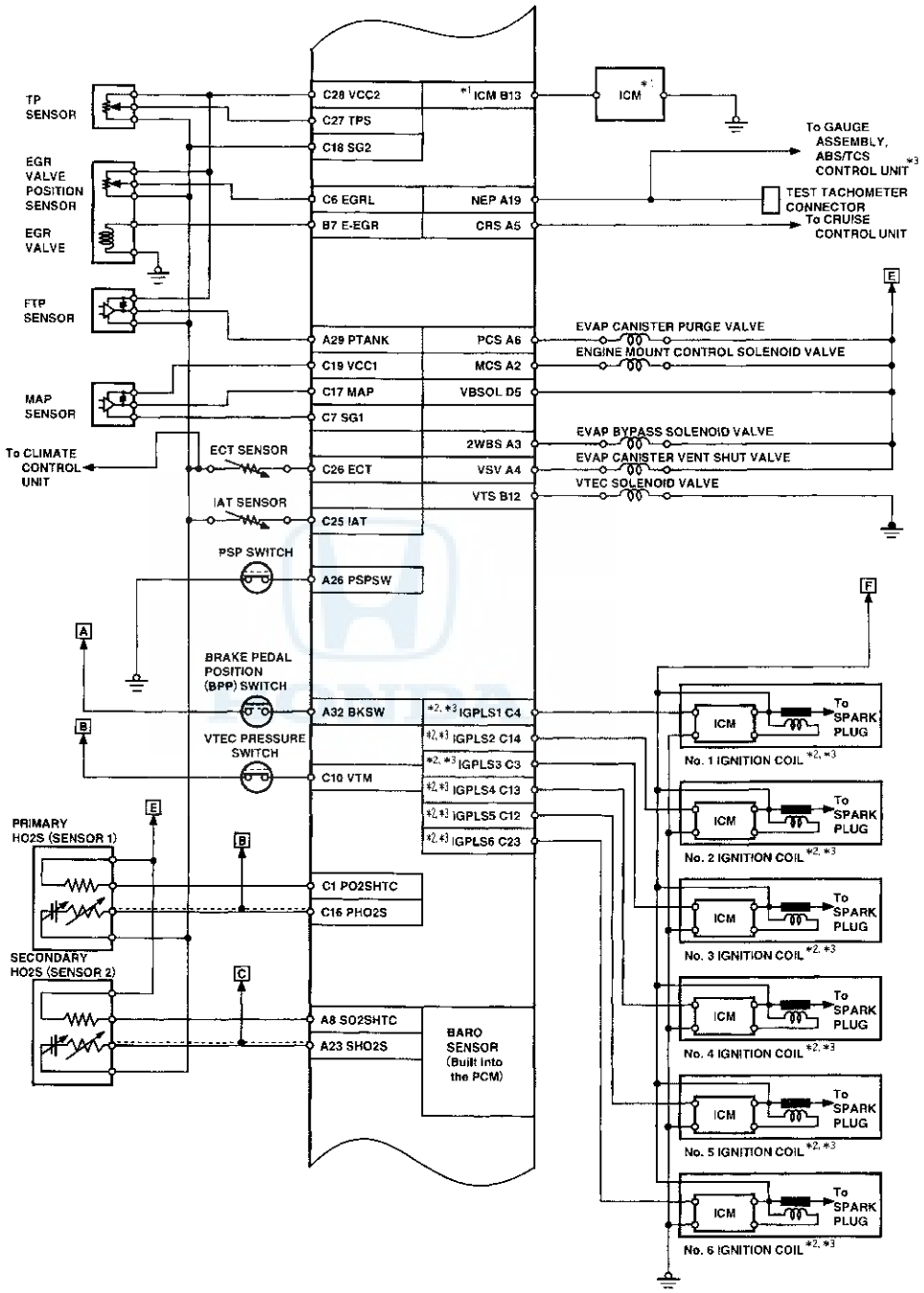
TP SENSOR
EGR VALVE POSITION SENSOR
EGR VALVE
FTP SENSOR
MAP SENSOR
To CLIMATE CONTROL UNIT
ECT SENSOR
IAT SENSOR
PSP SWITCH
BRAKE PEDAL POSITION (BPP) SWITCH
VTEC PRESSURE SWITCH
PRIMARY HO2S (SENSOR 1)
SECONDARY HO2S (SENSOR 2)
C28 VCC2
C27 TPS
C18 SG2
C6 EGRL
B7 E-EGR
A29 PTANK
C19 VCC1
C17 MAP
C7 SG1
C26 ECT
C25 IAT
A26 PSPSW
A32 BKSW
C10 VTM
C1 PO2SHTC
C16 PHO2S
A8 SO2SHTC
A23 SHO2S
*1 ICM B13
NEP A19
CRS A5
PCS A6
MCS A2
VBSOL D5
2WBS A3
VSV A4
VTS B12
*2, *3 IGPLS1 C4
*2, *3 IGPLS2 C14
*2, *3 IGPLS3 C3
*2, *3 IGPLS4 C13
*2, *3 IGPLS5 C12
*2, *3 IGPLS6 C23
BARO SENSOR (Built into the PCM)
ICM *1
To GAUGE ASSEMBLY, ABS/TCS CONTROL UNIT *3
TEST TACHOMETER CONNECTOR
To CRUISE CONTROL UNIT
EVAP CANISTER PURGE VALVE
ENGINE MOUNT CONTROL SOLENOID VALVE
EVAP BYPASS SOLENOID VALVE
EVAP CANISTER VENT SHUT VALVE
VTEC SOLENOID VALVE
ICM
To SPARK PLUG
No. 1 IGNITION COIL *2, *3
No. 2 IGNITION COIL *2, *3
No. 3 IGNITION COIL *2, *3
No. 4 IGNITION COIL *2, *3
No. 5 IGNITION COIL *2, *3
No. 6 IGNITION COIL *2, *3
A
B
C
E
F

(cont'd)

System Descriptions (cont'd)

PCM Electrical Connections (cont'd)

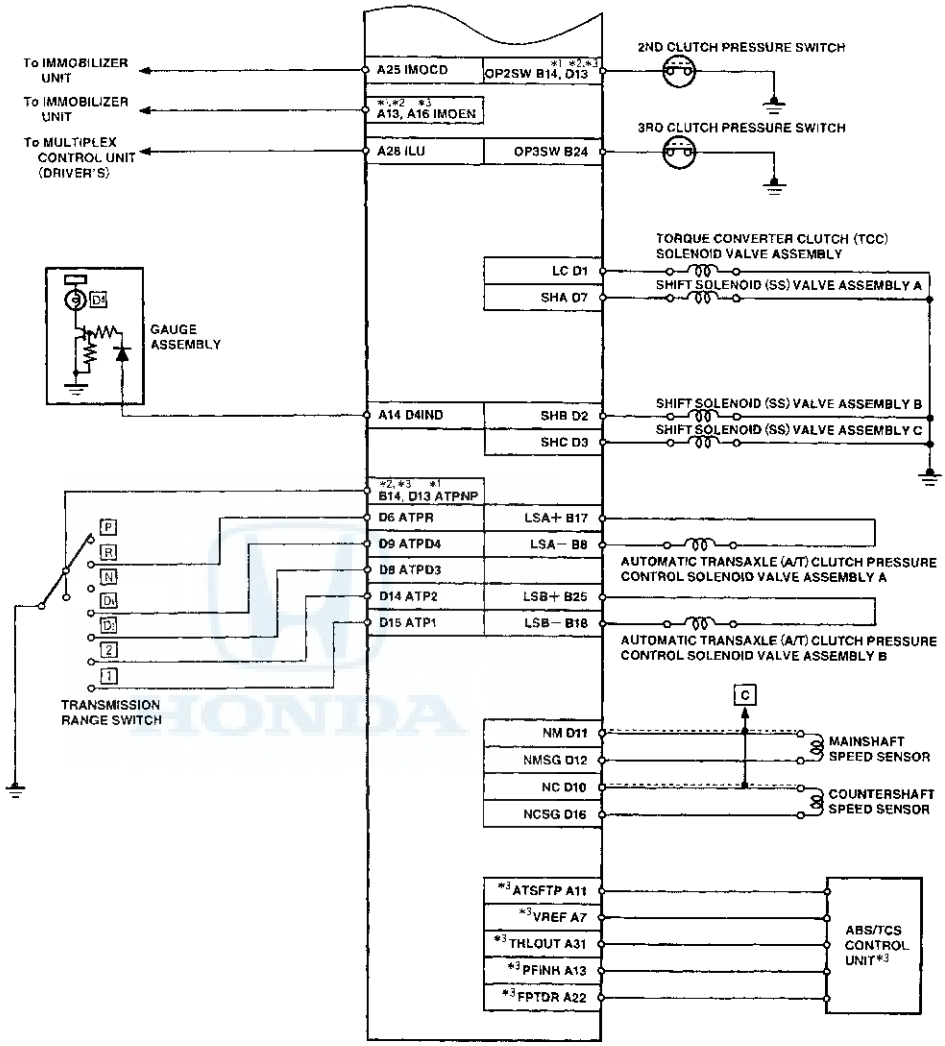

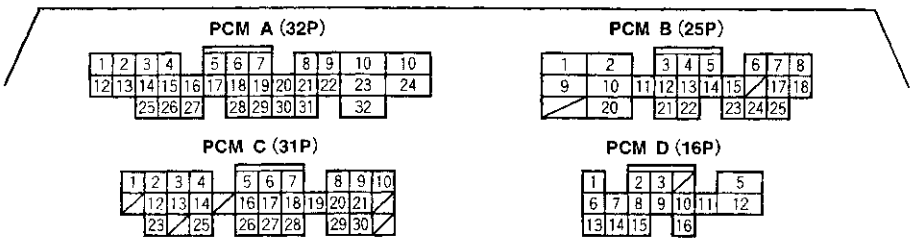

TERMINAL LOCATIONS

PCM Inputs and Outputs at Connector A (32P)

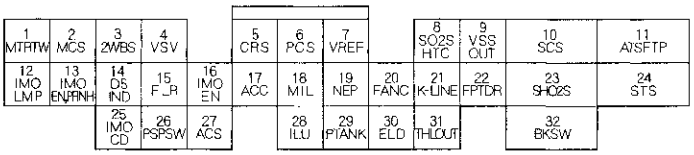

Wire side of female terminals

NOTE: Standard battery voltage is 12 V.

Terminal number	Wire color	Terminal name	Description	Signal
1*2, *3	YEL/GRN	MTRTW	Sends engine coolant temperature signal.	With ignition switch ON (II): pulses
2	GRN/WHT	MCS (ENGINE MOUNT CONTROL SOLENOID VALVE)	Drives engine mount control solenoid valve.	At idle: 0 V Above idle: battery voltage
3	BLU	2WBS (EVAP BYPASS SOLENOID VALVE)	Drives EVAP bypass solenoid valve.	With ignition switch ON (II): battery voltage
4	LT GRN/ WHT	VSV (EVAP CANISTER VENT SHUT VALVE)	Drives EVAP canister vent shut valve.	With ignition switch ON (II): battery voltage
5	BLU/GRN	CRS (CRUISE CONTROL SIGNAL)	Detects cruise control signal.	With ignition switch ON (II): pulses
6	RED/YEL	PCS (EVAP CANISTER PURGE VALVE)	Drives EVAP canister purge valve.	With engine running, engine coolant, below 147°F (64 °C): battery voltage With engine running, engine coolant, above 147°F (64 °C): duty controlled
7*3	ORN/GRN	VREF (REFERRENCE VOLTAGE)	Provides reference voltage to ABS/TCS control unit.	With ignition switch ON (II): about 5 V With ignition switch OFF: 0 V
8	BLK/WHT	SO2SHTC (SECONDARY HEATED OXYGEN SENSOR HEATER CONTROL)	Drives secondary heated oxygen sensor heater.	With ignition switch ON (II): battery voltage With fully warmed up engine running: duty controlled
9	BLU/WHT	VSSOUT (VEHICLE SPEED SENSOR OUTPUT SIGNAL)	Sends vehicle speed sensor signal.	Depending on vehicle speed: pulses
10	BRN	SCS (SERVICE CHECK SIGNAL)	Detects service check connector signal (the signal causing a DTC indication)	With the service check signal shorted with the Honda PGM Tester: 0 V With the service check signal opened: about 5 V or battery voltage
11*3	LT GRN	ATSFTP (TRANSMISSION RANGE SWITCH)	Sends transmission gear switch signal.	With engine running in park position: about 4 V With the service check signal opened: about 5 V or battery voltage
12	PNK	IMOLMP (IMMOBLIZER INDICATOR LIGHT)	Drives immobilizer indicator light.	With immobilizer indicator light turned ON: 0 V With immobilizer indicator light turned OFF: battery voltage
13*1, *2	BLU	IMOEN (IMMOBILZER ENABLE SIGNAL)	Sends immobilizer enable signal.	
14	GRN/BLK	D4IND (D4 INDICATOR)	Drives D4 indicator light.	With D4 indicator light turned ON: 0 V With D4 indicator light turned OFF: battery voltage
15	GRN/YEL	FLR (IMMOBILIZER FUEL PUMP RELAY)	Drives fuel pump relay.	0 V for two seconds after turning ignition switch ON (II), then battery voltage
16*3	BLU	IMOEN (IMMOBILIZER ENABLE SIGNAL)	Sends immobilizer enable signal	
17	RED	ACC (A/C CLUTCH RELAY)	Drives A/C clutch relay.	With compressor ON: 0 V With compressor OFF: battery voltage

*1: '98-99 models
*2: '00 model
*3: '01 model

(cont'd)

System Descriptions (cont'd)

PCM Inputs and Outputs at Connector A (32P)

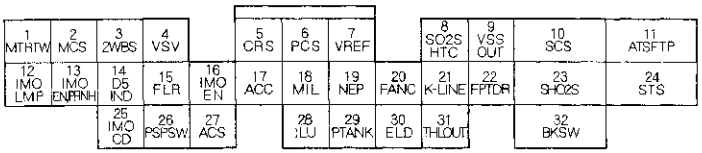

Wire side of female terminals

NOTE: Standard battery voltage is 12 V.

Terminal number	Wire color	Terminal name	Description	Signal
18	GRN/ORN	MIL (MALFUNCTION INDICATOR LIGHT)	Drives MIL.	With MIL turned ON: 0 V With MIL turned OFF: battery voltage
19	BLU	NEP (ENGINE SPEED PULSE)	Outputs engine speed pulse.	With engine running: pulses
20	GRN	FANC (RADIATOR FAN CONTROL)	Drives radiator fan relay.	With radiator fan running: 0 V With radiator fan stopped: battery voltage
21	GRY	K-LINE	Sends and receives scan tool signal.	With ignition switch ON (II): pulses
22*3	GRN/RED	FPTDR (FRAME TO POWERTRAIN TORQUE DOWN REQUEST)	Detects engine retard request signal.	With TCS operating: about 5 V With TCS not operating: about 2.5 V
23	WHT/RED	SHO2S (SECONDARY HEATED OXYGEN SENSOR, SENSOR 2)	Detects secondary heated oxygen sensor (sensor 2) signal.	With throttle fully opened from idle with fully warmed up engine: above 0.6 V With throttle quickly closed: below 0.4 V
24	BLU/ORN	STS (STARTER SWITCH SIGNAL)	Detects starter switch signal.	With starter switch ON (II): battery voltage With starter switch OFF: 0 V
25	RED	IMOCD (IMMOBILIZER CODE)	Detects immobilizer signal.	
26	GRN	PSPSW (P/S PRESSURE SWITCH SIGNAL)	Detects PSP switch signal.	At idle with steering wheel in straight ahead position: 0 V At idle with steering wheel at full lock: battery voltage
27	BLU/RED	ACS (A/C SWITCH SIGNAL)	Detects A/C switch signal.	With A/C switch ON: 0 V With A/C switch OFF: about 5V
28	WHT/RED	ILU (INTERLOCK CONTROL UNIT)	Sends Interlock control signal	With ignition switch ON (II) and brake pedal depressed: about 0 V
29	LT GRN	PTANK (FUEL TANK PRESSURE SENSOR)	Detects FTP sensor signal.	With ignition switch ON (II) and fuel fill cap: opened: about 2.5 V
30	GRN/RED	ELD (ELECTRICAL LOAD DETECTOR)	Detects ELD signal.	With parking lights turned on at idle: about 2.5–3.5 V With low beam headlights turned on at idle: about 1.5–2.5 V
31*3	YEL/GRN	THLOUT (THROTTLE POSITION SENSOR OUTPUT SIGNAL)	Sends TP sensor signal.	With throttle fully open: about 4.8 V With throttle fully closed: about 0.5 V
32	WHT/BLK	BKSW (BRAKE PEDAL POSITION SWITCH)	Detects brake pedal position switch signal.	With brake pedal released: 0 V With brake pedal pressed: battery voltage

*1: '98-99 models
*2: '00 model
*3: '01 model

PCM Inputs and Outputs at Connector B (25P)

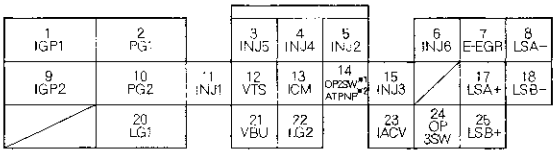

Wire side of female terminals

NOTE: Standard battery voltage is 12 V.

Terminal number	Wire color	Terminal name	Description	Signal
1	YEL/BLK	IGP1 (POWER SOURCE)	Power source for the PCM circuit.	With the ignition switch ON (II): battery voltage With the ignition switch OFF: about 0 V
2	BLK	PG1 (POWER GROUND)	Ground for the PCM circuit.	Less than 1.0 V at all times
3	BLK/RED	INJ5 (No. 5 INJECTOR)	Drives No. 5 injector.	With engine running: pulses
4	YEL	INJ4 (No. 4 INJECTOR)	Drives No. 4 injector.	
5	RED	INJ2 (No. 2 INJECTOR)	Drives No. 2 injector.	
6	WHT/BLU	INJ6 (No. 6 INJECTOR)	Drives No. 6 injector.	
7	PNK	E-EGR	Drives EGR valve.	With EGR operating : duty controlled With EGR not operating: about 0 V
8	WHT	LSA − (A/T CLUTCH PRESSURE CONTROL SOLENOID VALVE A − SIDE)	A/T clutch pressure control solenoid valve A power supply negative terminal	With the ignition switch ON (II): pulses
9	YEL/BLK	IGP2 (POWER SOURCE)	Power source for the PCM circuit.	With the ignition switch ON (II): battery voltage With the ignition switch OFF: 0 V
10	BLK	PG2 (POWER GROUND)	Ground for the PCM circuit.	Less than 1.0 V at all times
11	BRN	INJ1 (No. 1 INJECTOR)	Drives No. 1 injector.	With engine running: pulses
12	GRN/YEL	VTS (VTEC SOLENOID VALVE)	Drives VTEC solenoid valve.	With engine at low rpm: 0 V With engine at high rpm: battery voltage
13*1	YEL/GRN	ICM (IGNITION CONTROL MODULE)	Sends ignition pulse.	With the ignition switch ON (II): battery voltage With engine running: about 10 V (depending on engine speed)
14*1	BLU/BLK	OP2SW (2ND OIL PRESSURE SWITCH)	Detects 2nd oil pressure switch.	With the ignition switch ON (II): battery voltage
14*2, *3	BLU/WHT	ATPNP (TRANSMISSION RANGE SWITCH)	Detects transmission range switch signal.	In Park or Neutral: 0 V In any other position: battery voltage
15	BLU	INJ3 (No. 3 INJECTOR)	Drives No. 3 injector.	With engine running: pulses
17	RED	LSA + (A/T CLUTCH PRESSURE CONTROL SOLENOID VALVE A + SIDE)	A/T clutch pressure control solenoid valve A power supply positive terminal	With the ignition switch ON (II): pulses
18	GRN	LSB − (A/T CLUTCH PRESSURE CONTROL SOLENOID VALVE B − SIDE)	A/T clutch pressure control solenoid valve B power supply negative terminal	With the ignition switch ON (II): pulses
20	BRN/BLK	LG1 (LOGIC GROUND)	Ground for the PCM circuit.	Less than 1.0 V at all times
21	WHT/YEL	VBU (VOLTAGE BACK UP)	Power source for the PCM circuit. Power source for the DTC memory.	Battery voltage at all times
22	BLK*1 BRN/BLK*2	LG2 (LOGIC GROUND)	Ground for the PCM circuit.	Less than 1.0 V at all times
23	BLK/BLU	IACV (IDLE AIR CONTROL VALVE)	Drives IAC valve.	With engine running: pulses
24	BLU/WHT	OP3SW (3RD OIL PRESSURE SWITCH)	Detects 3rd oil pressure switch.	With the ignition switch ON (II): battery voltage
25	ORN	LSB + (A/T CLUTCH PRESSURE CONTROL SOLENOID VALVE B + SIDE)	A/T clutch pressure control solenoid valve B power supply positive terminal	With the ignition switch ON (II): pulses

*1: '98-99 models
*2: '00 model
*3: '01 model

(cont'd)

System Descriptions (cont'd)

PCM Inputs and Outputs at connector C (31P)

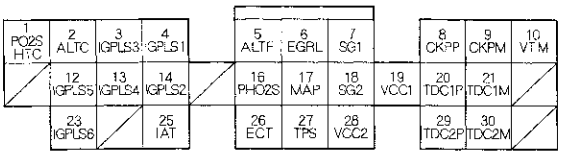

Wire side of female terminals

NOTE: Standard battery voltage is 12 V.

Terminal number	Wire color	Terminal name	Description	Signal
1	BLK/WHT	PO2SHTC (PRIMARY HEATED OXYGEN SENSOR HEATER CONTROL)	Drives primary heated oxygen sensor heater.	With ignition switch ON (II): battery voltage With fully warmed up engine running: duty controlled
2	WHT/GRN	ALTC (ALTERNATOR CONTROL)	Sends alternator control signal.	With engine running: about 0 V – 5 V (depending on electrical load)
3*2, *3	WHT/BLU	IGPLS 3 (No. 3 IGNITION COIL PULSE)	Drives No. 3 ignition coil.	With ignition switch ON (II): 0 V With engine running: pulses
4*2, *3	YEL/GRN	IGPLS 1 (No. 1 IGNITION COIL PULSE)	Drives No. 1 ignition coil.	
5	WHT/RED	ALTF (ALTERNATOR FR SIGNAL)	Detects alternator FR signal.	With engine running: about 0 V – 5 V (depending on electrical load)
6	WHT/BLK	EGRL (EGR VALVE LIFT SENSOR)	Detects EGR valve lift sensor signal.	At idle: about 1.2 V
7	GRN/WHT	SG1 (SENSOR GROUND)	Ground for MAP sensor.	Less than 1.0 V at all times
8	BLU	CKPP (CKP SENSOR P SIDE)	Detects CKP sensor.	With engine running: pulses
9	WHT	CKPM (CKP SENSOR M SIDE)	Ground for CKP sensor.	
10	BLU/BLK	VTM (VTEC PRESSURE SWITCH SIGNAL)	Detects VTEC pressure switch signal.	With engine at low rpm: 0 V With engine at high rpm: battery voltage
12*2, *3	BLK/RED	IGPLS 5 (No. 5 IGNITION COIL PULSE)	Drives No. 5 ignition coil.	With ignition switch ON (II): 0V With engine running: pulses
13*2, *3	BRN	IGPLS 4 (No. 4 IGNITION COIL PULSE)	Drives No. 4 ignition coil.	
14*2, *3	BLU/RED	IGPLS 2 (No. 2 IGNITION COIL PULSE)	Drives No. 2 ignition coil.	
16	WHT	PHO2S (PRIMARY HEATED OXYGEN SENSOR, SENSOR 1)	Detects primary heated oxygen sensor (sensor 1) sigal.	With throttle fully opened from idle with fully, warmed up engine: above 0.6 V With throttle quickly closed: below 0.4 V
17	RED/GRN	MAP (MANIFOLD ABSOLUTE PRESSURE SENSOR)	Detects MAP sensor signal.	With ignition switch ON (II): about 3 V At idle: about 1.0 V (depending on engine speed)
18	GRN/BLK	SG2 (SENSOR GROUND)	Sensor ground.	Less than 1.0 V at all times.
19	YEL/RED	VCC1 (SENSOR VOLTAGE)	Power source to MAP sensor.	With ignition switch ON (II): about 5 V With ignition switch OFF: 0 V
20	GRN	TDC1P (TDC SENSOR 1P SIDE)	Detect TDC sensor 1.	With engine running: pulses
21	RED	TDC1M (TDC SENSOR 1M SIDE)	Ground for TDC sensor 1.	
23*2, *3	BRN/WHT	IGPLS 6 (No. 6 IGNITION COIL PULSE)	Drives No. 6 ignition coil.	With ignition switch ON (II): 0V With engine running: pulses
25	RED/YEL	IAT (INTAKE AIR TEMPERATURE SENSOR)	Detects IAT sensor signal.	With ignition switch ON (II): about 0.1 – 4.8 V (depending on intake air temperature)
26	RED/WHT	ECT (ENGINE COOLANT TEMPERATURE SENSOR)	Detects ECT sensor signal.	With ignition switch ON (II): about 0.1 – 4.8 V (depending on engine coolant temperature)
27	RED/BLK	TPS (THROTTLE POSITION SENSOR)	Detects TP sensor signal.	With throttle fully open: about 4.8 V With throttle fully closed: about 0.5 V
28	YEL/BLU	VCC2 (SENSOR VOLTAGE)	Provides sensor voltage.	With ignition switch ON (II): about 5 V With ignition switch OFF: 0 V
29	YEL	TDC2P (TDC2 SENSOR P SIDE)	Detects TDC sensor 2.	With engine running: pulses
30	BLK	TDC2M (TDC2 SENSOR M SIDE)	Ground for TDC sensor 2.	

*2: '00 model
*3: '01 model

PCM Inputs and Outputs at Connector D (16P)

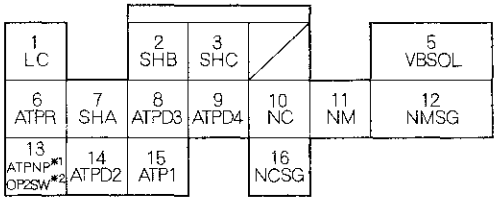

Wire side of female terminals

NOTE: Standard battery voltage is 12 V.

Terminal number	Wire color	Terminal name	Description	Signal
1	YEL	LC (TORQUE CONVERTER CLUTCH SOLENOID VALVE)	Drives torque converter clutch solenoid valve.	With lock-up ON: battery voltage With lock-up OFF: 0 V
2	GRN/WHT	SHB (SHIFT SOLENOID VALVE B)	Drives shift solenoid valve B.	With engine running in 1st, 2nd gears: battery voltage With engine running in 3rd, 4th gears: about 0 V
3	GRN	SHC (SHIFT CONTROL SOLENOID VALVE C)	Drives shift control solenoid valve C.	With engine running in 1st and 3rd gears: battery voltage With engine running in 2nd and 4th gears: 0 V
5	BLK/YEL	VBSOL (BATTERY VOLTAGE FOR SOLENOID VALVE)	Power source for solenoid valve.	With ignition switch ON (II): battery voltage
6	WHT	ATPR (TRANSMISSION RANGE SWITCH)	Detects transmission range switch signal.	In R position: 0 V In any other position: battery voltage
7	BLU/YEL	SHA (SHIFT SOLENOID VALVE A)	Drives shift solenoid valve A.	With engine running in 2nd, 3rd gears: battery voltage With engine running in 1st, 4th gears: about 0 V
8	PNK	ATPD3 (TRANSMISSION RANGE SWITCH)	Detects transmission range switch signal.	In D3 position: 0 V In any other position: battery voltage
9	YEL	ATPD4 (TRANSMISSION RANGE SWITCH)	Detects transmission range switch signal.	In D4 position: 0 V In any other position: about 5 V or battery voltage
10	BLU	NC (COUNTERSHAFT SPEED SENSOR)	Detects countershaft speed sensor signals.	With ignition switch ON (II), and front wheels rotating: battery voltage
11	RED	NM (MAINSHAFT SPEED SENSOR)	Detects mainshaft speed sensor signals.	With engine running: pulses
12	WHT	NMSG (MAINSHAFT SPEED SENSOR GROUND)	Ground for mainshaft speed sensor.	
13*2,*3	BLU/WHT	ATPNP (TRANSMISSION RANGE SWITCH)	Detects transmission range switch signal.	In Park or Neutral: 0 V In any other position: battery voltage
13*2,*3	BLU/BLK	OP2SW (2ND OIL PRESSURE SWITCH)	Detects 2nd oil pressure switch.	With the ignition switch ON (II): battery voltage
14	BLU	ATP2 (TRANSMISSION RANGE SWITCH)	Detects transmission range switch signal.	In 2nd position: 0 V In any other position: battery voltage
15	BRN	ATP1 (TRANSMISSION RANGE SWITCH)	Detects transmission range switch signal.	In 1st position: 0 V In any other position: battery voltage
16	GRN	NCSG (COUNTERSHAFT SPEED SENSOR GROUND)	Ground for countershaft speed sensor.	

*1: '98-99 models
*2: '00 model
*3: '01 model

(cont'd)

System Descriptions (cont'd)

Vacuum Hose Routing — '98-99 models:

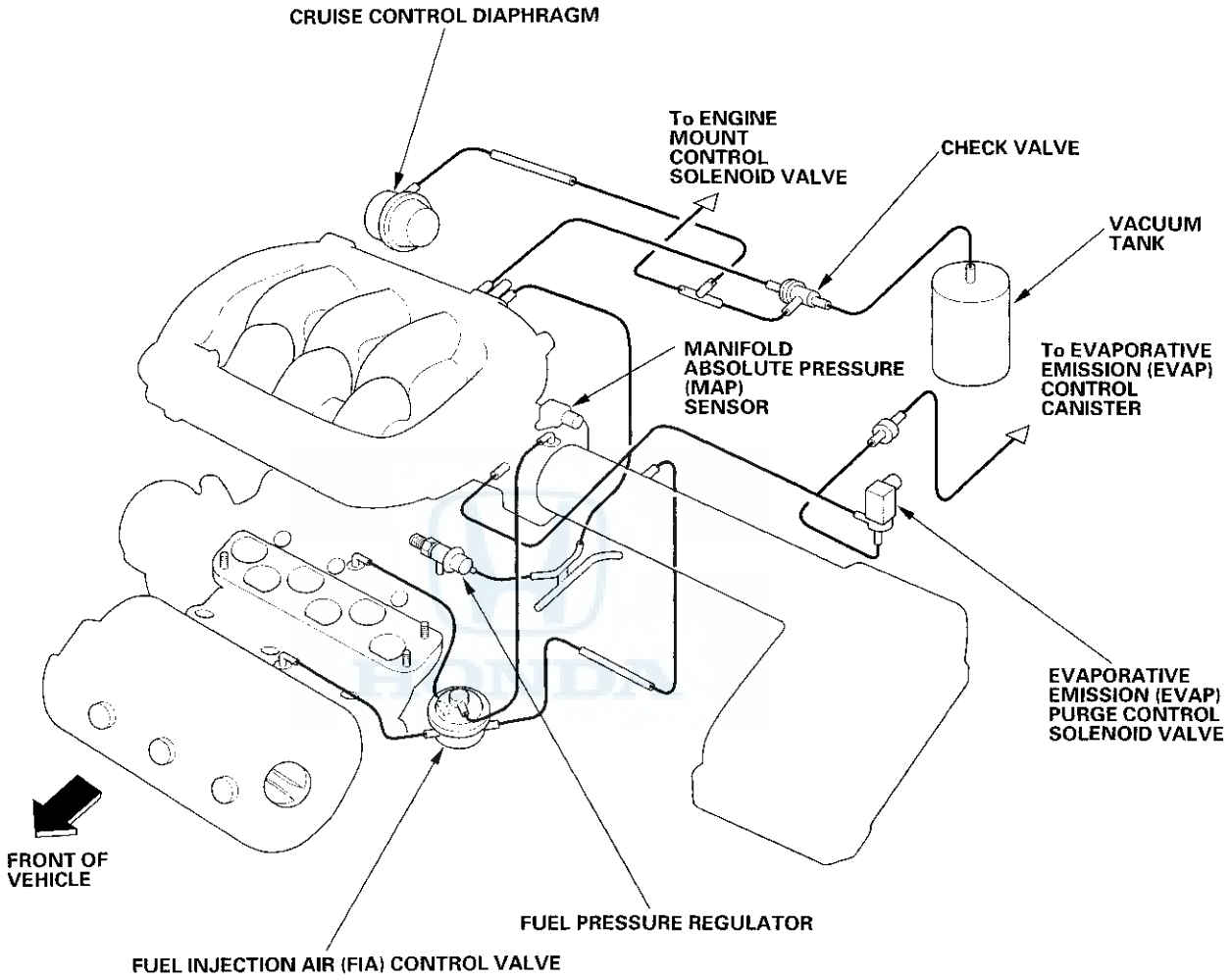

'00-01 models:

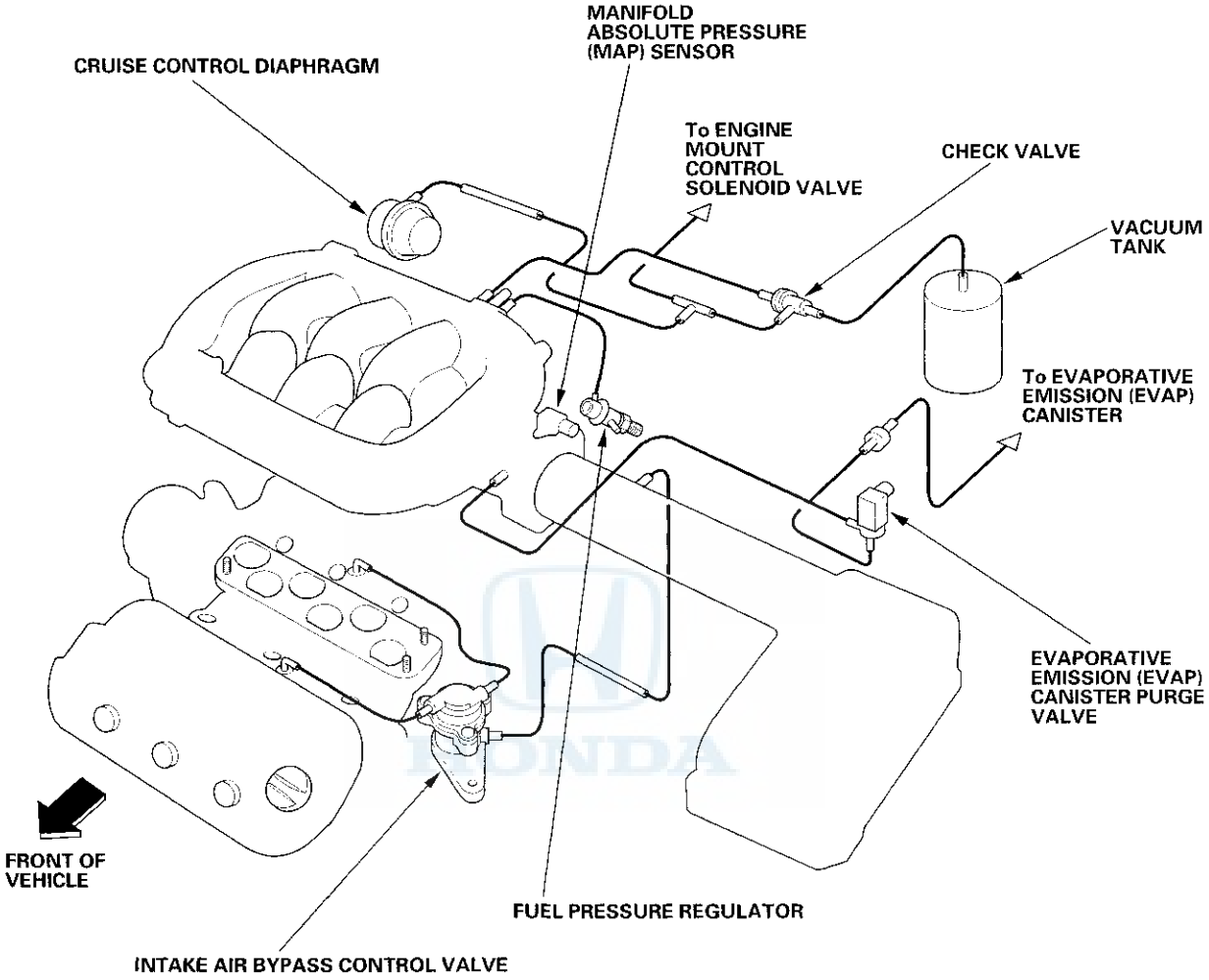

(cont'd)

System Descriptions (cont'd)

Vacuum Distribution — '98-99 models:

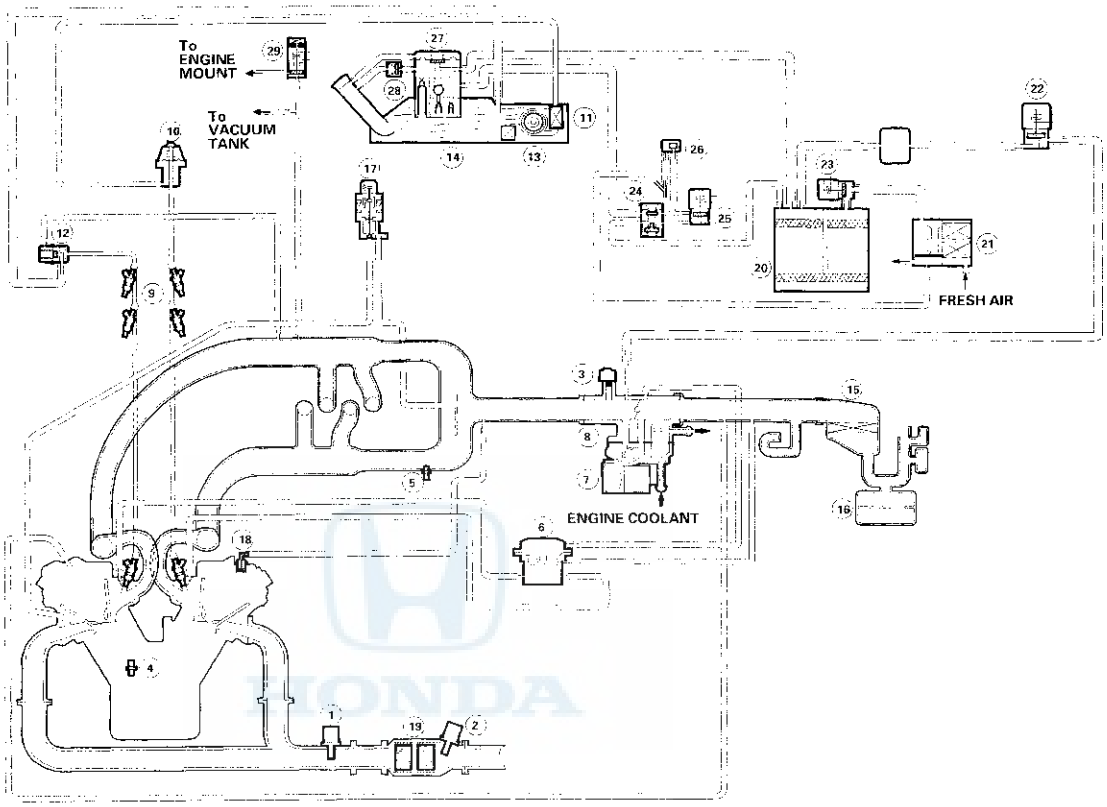

① PRIMARY HEATED OXYGEN SENSOR (PRIMARY HO2S) (SENSOR 1)
② SECONDARY HEATED OXYGEN SENSOR (SECONDARY HO2S) (SENSOR 2)
③ MANIFOLD ABSOLUTE PRESSURE (MAP) SENSOR
④ ENGINE COOLANT TEMPERATURE (ECT) SENSOR
⑤ INTAKE AIR TEMPERATURE (IAT) SENSOR
⑥ FUEL INJECTION AIR (FIA) CONTROL VALVE
⑦ IDLE AIR CONTROL (IAC) VALVE
⑧ THROTTLE BODY (TB)
⑨ FUEL INJECTOR
⑩ FUEL PULSATION DAMPER
⑪ FUEL FILTER
⑫ FUEL PRESSURE REGULATOR
⑬ FUEL PUMP (FP)
⑭ FUEL TANK
⑮ AIR CLEANER
⑯ RESONATOR
⑰ EXHAUST GAS RECIRCULATION (EGR) VALVE and LIFT SENSOR
⑱ POSITIVE CRANKCASE VENTILATION (PCV) VALVE
⑲ THREE WAY CATALYTIC CONVERTER
⑳ EVAPORATIVE EMISSION (EVAP) CONTROL CANISTER
㉑ EVAPORATIVE EMISSION (EVAP) CONTROL CANISTER FILTER
㉒ EVAPORATIVE EMISSION (EVAP) PURGE CONTROL SOLENOID VALVE
㉓ EVAPORATIVE EMISSION (EVAP) CONTROL CANISTER VENT SHUT VALVE
㉔ EVAPORATIVE EMISSION (EVAP) TWO WAY VALVE
㉕ EVAPORATIVE EMISSION (EVAP) BYPASS SOLENOID VALVE
㉖ FUEL TANK PRESSURE SENSOR
㉗ ONBOARD REFUELING VAPOR RECOVERY (ORVR) VENT SHUT VALVE
㉘ ONBOARD REFUELING VAPOR RECOVERY (ORVR) VAPOR RECIRCULATION VALVE
㉙ ENGINE MOUNT CONTROL SOLENOID VALVE

'00-01 models:

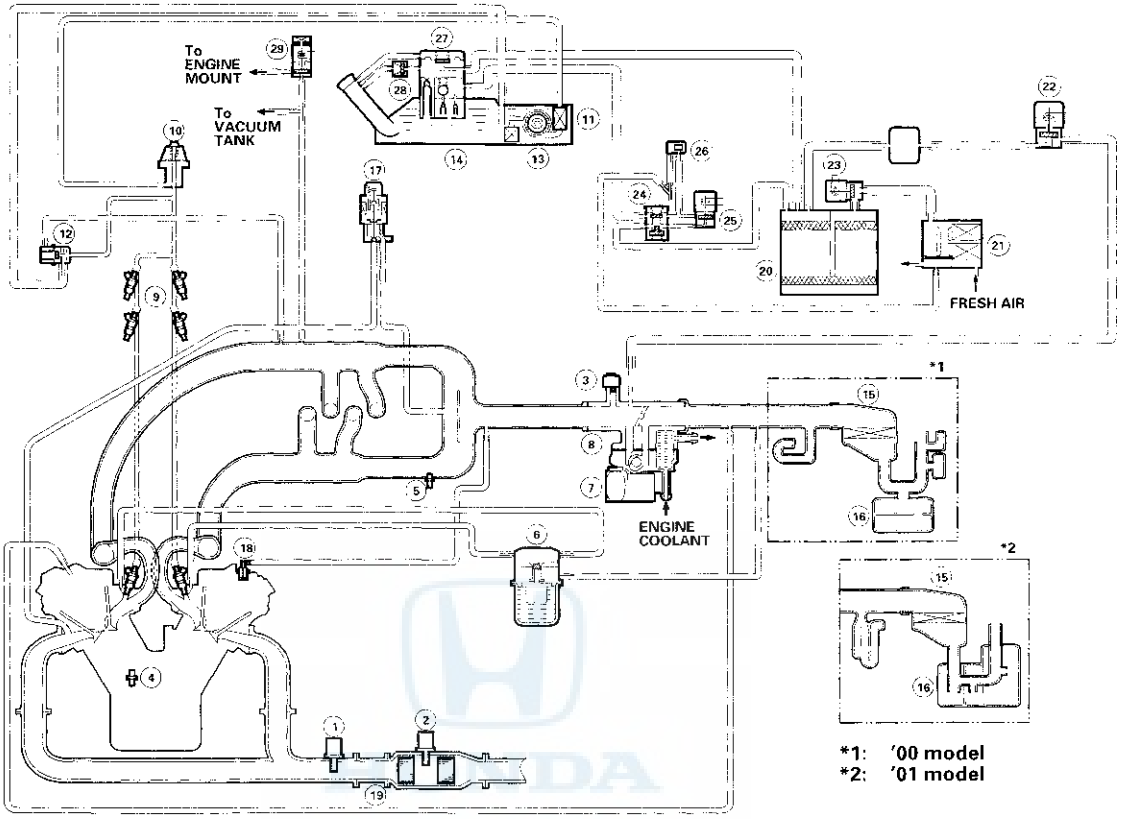

① PRIMARY HEATED OXYGEN SENSOR (PRIMARY HO2S) (SENSOR 1)
② SECONDARY HEATED OXYGEN SENSOR (SECONDARY HO2S) (SENSOR 2)
③ MANIFOLD ABSOLUTE PRESSURE (MAP) SENSOR
④ ENGINE COOLANT TEMPERATURE (ECT) SENSOR
⑤ INTAKE AIR TEMPERATURE (IAT) SENSOR
⑥ INTAKE AIR BYPASS CONTROL VALVE
⑦ IDLE AIR CONTROL (IAC) VALVE
⑧ THROTTLE BODY
⑨ INJECTOR
⑩ FUEL PULSATION DAMPER
⑪ FUEL FILTER
⑫ FUEL PRESSURE REGULATOR
⑬ FUEL PUMP (FP)
⑭ FUEL TANK
⑮ AIR CLEANER
⑯ RESONATOR
⑰ EXHAUST GAS RECIRCULATION (EGR) VALVE and POSITION SENSOR
⑱ POSITIVE CRANKCASE VENTILATION (PCV) VALVE
⑲ THREE WAY CATALYTIC CONVERTER
⑳ EVAPORATIVE EMISSION (EVAP) CANISTER
㉑ EVAPORATIVE EMISSION (EVAP) CANISTER FILTER
㉒ EVAPORATIVE EMISSION (EVAP) CANISTER PURGE VALVE
㉓ EVAPORATIVE EMISSION (EVAP) CANISTER VENT SHUT VALVE
㉔ EVAPORATIVE EMISSION (EVAP) TWO WAY VALVE
㉕ EVAPORATIVE EMISSION (EVAP) BYPASS SOLENOID VALVE
㉖ FUEL TANK PRESSURE SENSOR
㉗ FUEL TANK VAPOR CONTROL VALVE
㉘ FUEL TANK VAPOR RECIRCULATION VALVE
㉙ ENGINE MOUNT CONTROL SOLENOID VALVE

(cont'd)

System Descriptions (cont'd)

PGM-FI System

The Programmed Fuel Injection (PGM-FI) system is a sequential multiport fuel injection system.

Air Conditioning (A/C) Compressor Clutch Relay
When the PCM receives a demand for cooling from the A/C system, it delays the compressor from being energized, and enriches the mixture to assure smooth transition to the A/C mode.

Air Conditioning (A/C) Switch
The A/C switch signals the PCM whenever there is a demand for cooling.

Alternator Control
The alternator signals the Powertrain Control Module (PCM) during charging. The PCM then controls the voltage generated at the alternator assording to the electrical load determined by the Electrical Load Detector (ELD) and driving mode. This reduces engine load to improve fuel economy.

Barometric Pressure (BARO) Sensor
The Baro sensor is inside the PCM. It converts atmospheric pressure into a voltage signal that modifies the basic duration of the fuel injection discharge.

Crankshaft Position (CKP) Sensor
The CKP sensor determines timing for fuel injection of each cylinder and also detects engine speed.
The PCM detects misfiring by using the CKP sensor to monitor fluctuations in crankshaft speed. It will then set DTCs depending on how much misfiring occurs.

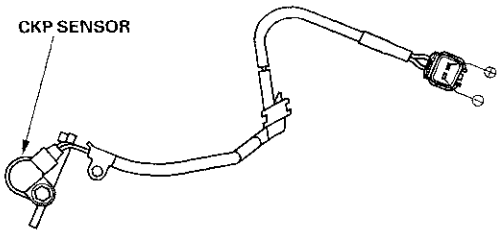

Engine Coolant Temperature (ECT) Sensor
The ECT sensor is a temperature dependent resistor (thermistor). The resistor of the thermistor decreases as the Engine Coolant temperature increases.

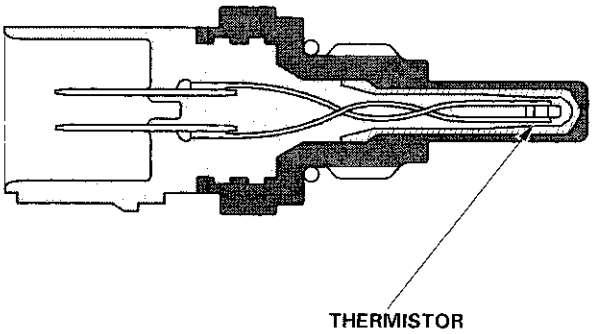

Ignition Timing Control
The PCM contains the memory for basic ignition timing at various engine speeds and manifold absolute pressure. It also adjusts the timing according to engine coolant temperature.

Injector Timing and Duration
The PCM contains the memory for basic discharge duration at various engine speeds and manifold pressures. The basic discharge duration, after being read out from the memory, is further modified by signals sent from various sensors to obtain the final discharge duration.
By monitoring long term fuel trim, the PCM detects long term malfunctions in the fuel system, and will set a Diagnostic Trouble Code (DTC).

Intake Air Temperature (IAT) Sensor
The IAT sensor is a temperature dependent resistor (thermistor). The resistance of the thermistor decreases as the intake air temperature increases.

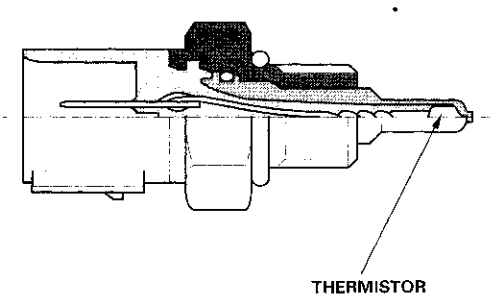

Malfunction Indicator Lamp (MIL) Indication (In relation to Readiness Codes)('01 model)
The vehicle has certain "readiness codes" that are part of the on-board diagnostics for the emissions systems. If the vehicle's battery has been disconnected or gone dead, these codes are erased. In some states, part of the emissions testing is to make sure these codes are set. If all of them are not set, the test cannot be completed.

To check if the readiness codes are set, turn the ignition switch ON (II), but do not start the engine. The MIL will come on for 15 - 20 seconds. If it then goes off, the readiness codes are set. If it blinks several times, the readiness codes are not set completely. To reset each code, drive the vehicle or run the engine as described in the procedures to set them. Refer to the '98-01 Accord Service Manual (see page 11-42).

Manifold Absolute Pressure (MAP) Sensor
The MAP sensor converts manifold absolute pressure into electrical signals to the PCM.

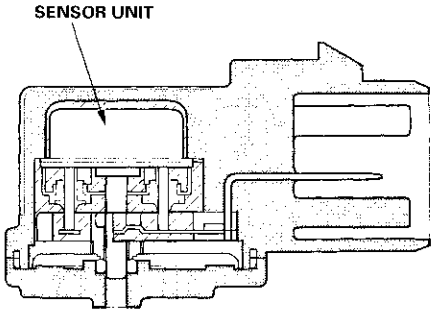

Primary Heated Oxygen sensor (Primary HO2S)
The primary HO2S detects the oxygen content in the exhaust gas and sends signals to the PCM which varies the duration of fuel injection accordingly. To stabilize its output, the sensor has an internal heater. The primary HO2S is installed in the exhaust manifold.
By controlling the air fuel ratio with primary HO2S and secondary HO2S, the deterioration of the primary HO2S can be evaluated by its feedback period. When the feedback period exceeds a certain value during stable driving conditions, the sensor is considered deteriorated and the PCM sets a DTC.

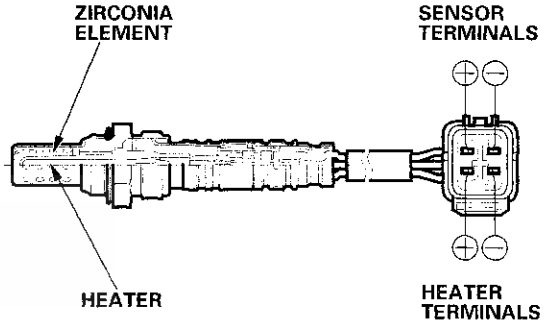

Secondary Heated Oxygen sensor (Secondary HO2S)
The secondary HO2S detects the oxygen content in the exhaust gas downstream of the Three Way Catalytic Converter (TWC) and sends signals to the PCM which varies the duration of fuel injection accordingly. To stabilize its output, the sensor has an internal heater. The secondary HO2S is installed in the TWC.

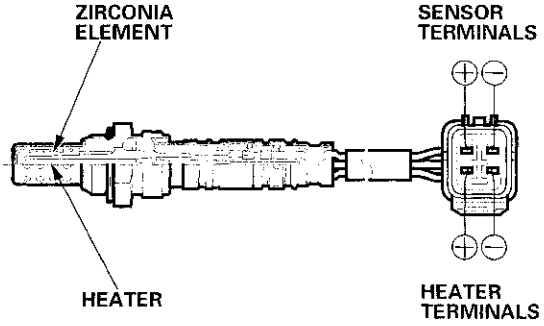

Starting Control
When the engine is started, the PCM provides a rich mixture by increasing injector duration.

(cont'd)

System Descriptions (cont'd)

Throttle Position (TP) Sensor
The TP sensor is a potentiometer connected to the throttle valve shaft. As the throttle position changes, the sensor varies the signal voltage to the PCM. The TP sensor is not replaceable apart from the throttle body.

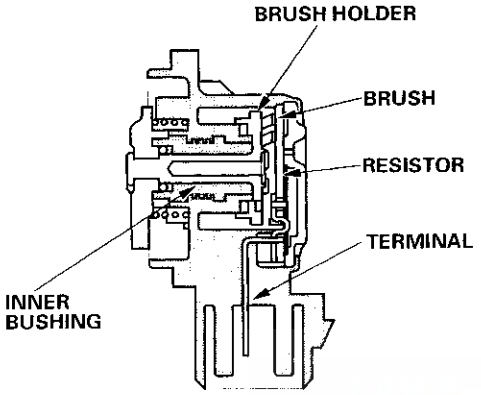

Top Dead Center (TDC) Sensor
The TDC1/TDC2 sensor determines ignition timing at start up (cranking) and when crank angle is abnormal.

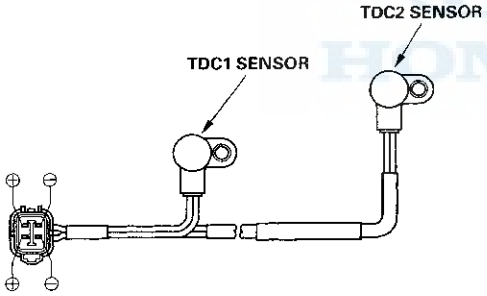

Idle Control System

When the engine is cold, the A/C compressor is on, the transmission is in gear, the brake pedal is depressed, the P/S load is high, or the alternator is charging, the PCM controls current to the IAC valve to maintain the correct idle speed. Refer to the System Diagram to see the functional layout of the system.

Brake Pedal Position Switch
The brake pedal position switch signals the PCM when the brake pedal is pressed.

Idle Air Control (IAC) Valve
To maintain the proper idle speed, the IAC valve changes the amount of air bypassing the throttle body in response to an electrical signal from the PCM.

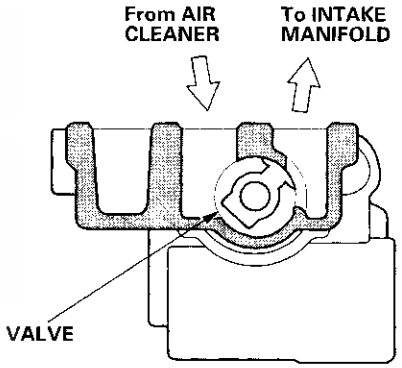

Power Steering Pressure (PSP) Switch
The PSP switch signals the PCM when the power steering load is high.

Starter (Ignition) Switch
The starter switch signals the PCM when the engine is cranking.

Fuel Supply System

Fuel Cut-off Control
During deceleration with the throttle valve closed, current to the fuel injectors is cut off to improve fuel economy at speeds over 1,100 rpm.
Fuel cut-off action also occurs when engine speed exceeds 6,600 rpm, regardless of the position of the throttle valve, to protect the engine from over-revving. When the vehicle is stopping, then PCM cuts the fuel at engine speed over 5,000 rpm.

Fuel Pump Control
When the ignition is turned on, the PCM grounds the PGM-FI main relay which feeds current to the fuel pump for 2 seconds to pressurize the fuel system. With the engine running, the PCM grounds the PGM-FI main relay and feeds current to the fuel pump. When the engine is not running and the ignition is on, the PCM cuts ground to the PGM-FI main relay which cuts current to the fuel pump.

PGM-FI Main Relay
The PGM-FI relay contains 2 separate relays. One is energized whenever the ignition is on which supplies battery voltage to the PCM, power to the fuel injectors, and power for the second relay. The second relay is energized to supply power to the fuel pump for 2 seconds when the ignition is switched ON (II), and when the engine is running.

Intake Air System

Refer to the System Diagram to see the functional layout of the system.

Intake Air Bypass Control System (Fuel Air (FIA) Control System)
When the engine is running, the Intake Air Bypass control valve sends air to the fuel injectors.

'98-99 models:

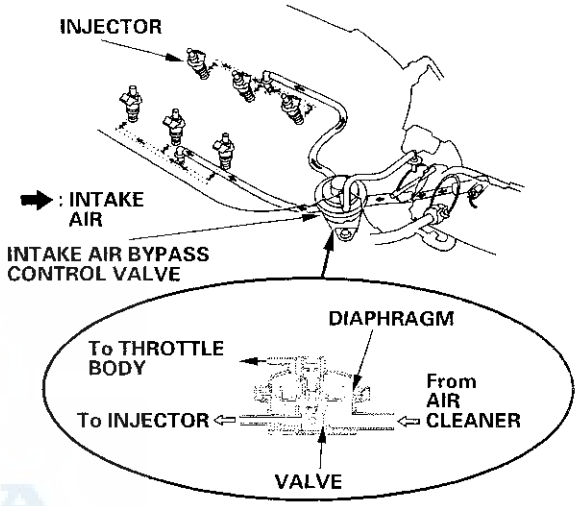

'00-01 models:

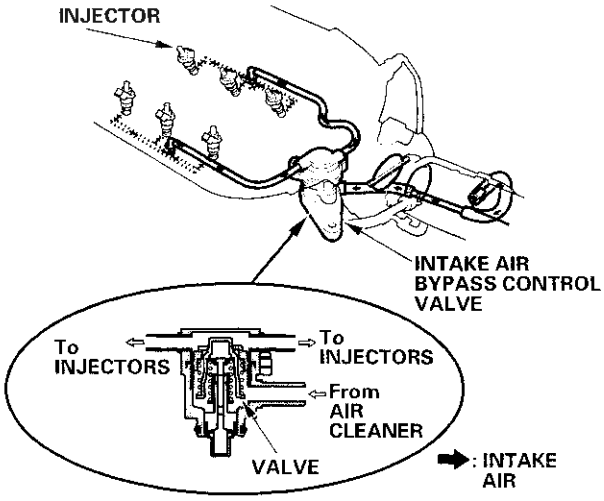

(cont'd)

System Descriptions (cont'd)

Throttle Body
The throttle body is a single-barrel side draft type. The lower portion of the throttle valve is heated by engine coolant from the cylinder head. The idle adjusting screw, which increases/decreases bypass air, is located on the top of the throttle body.

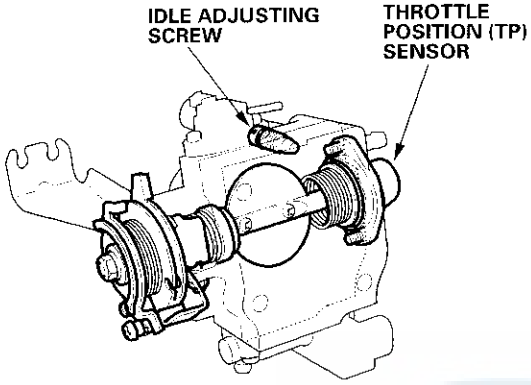

Catalytic Converter System

Three-Way Catalytic Converter (TWC)
The TWC converts hydrocarbons (HC), carbon monoxide (CO), and oxides of nitrogen (NOx) in the exhaust gas to carbon dioxide (CO_2), dinitrogen (N_2), and water vapor.

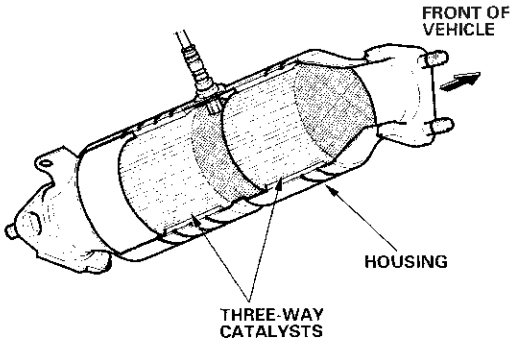

Exhaust Gas Recirculation System

Refer to System Diagram to see the functional layout of the system.

EGR Valve
The EGR valve is designed to lower peak combustion temperatures and reduce oxides of nitrogen emissions (NOx) by recirculating exhaust gas through the intake manifold and into the combustion chambers.

Positive Crankcase Ventilation (PCV) System

The PCV valve prevents blow-by gasses from escaping into the atmosphere by venting them into the intake manifold.

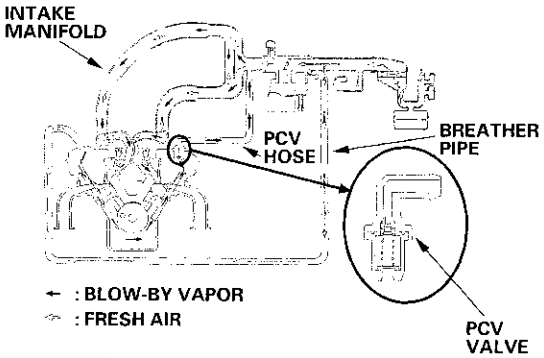

Evaporative Emission Control System

Refer to System Diagram to see the functional layout of the system.

EVAP Canister
The EVAP canister temporarily stores fuel vapor from the fuel tank until it can be purged back into the engine and burned (Refer to System Diagram to see the functional layout of the system).

EVAP Canister Purge Valve
When the engine coolant temperature is above 167°F (75°C), the PCM controls the EVAP canister purge valve which provides vacuum to the EVAP canister.

Fuel Tank Pressure (FTP) Sensor
The FTP sensor converts fuel tank absolute pressure into an electrical input to the PCM.

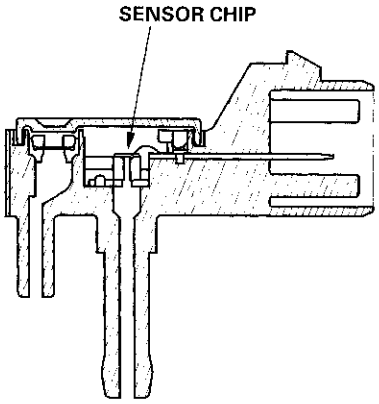

Idle Control System Diagram

The idle speed of the engine is controlled by the IAC (Idle Air Control) valve:

- After the engine starts, the IAC valve opens for a certain amount of time. The amount of air is increased to raise the idle speed by about 150 – 300 rpm.
- When the engine coolant temperature is low, the IAC valve is opened to obtain the proper fast idle speed. The amount of bypassed air is thus controlled in relation to engine coolant temperature.

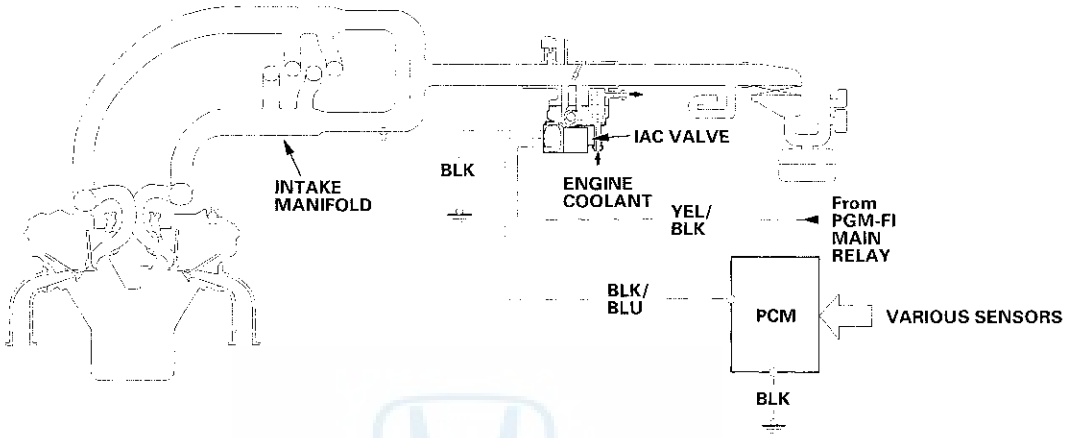

Intake Air System Diagram

This system supplies air to the engine. A resonator in the intake air pipe provides additional silencing as air is drawn into the system.

'98-99 models:

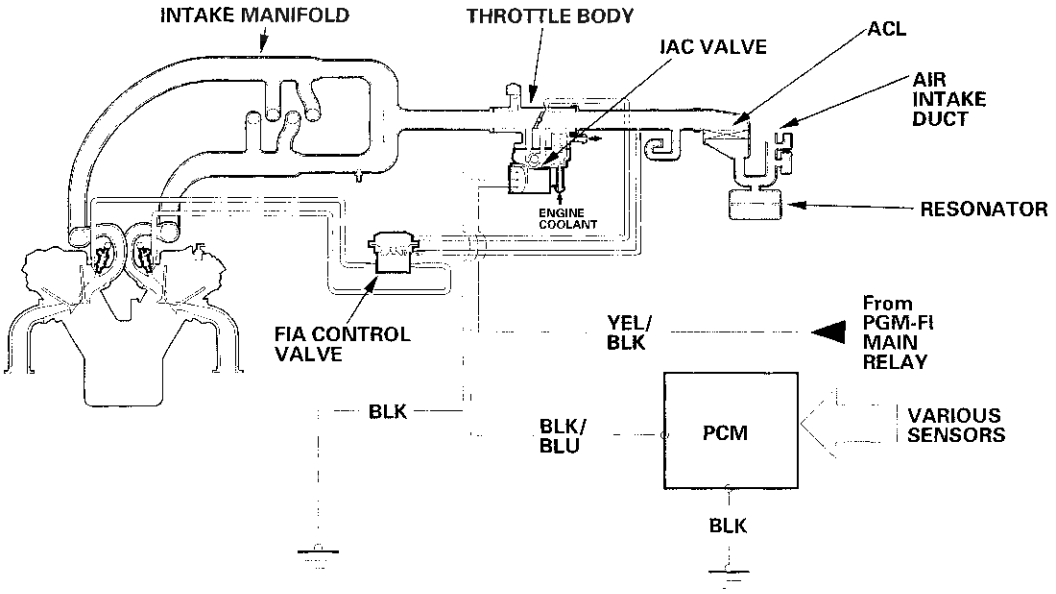

(cont'd)

System Descriptions (cont'd)

'00-01 models:

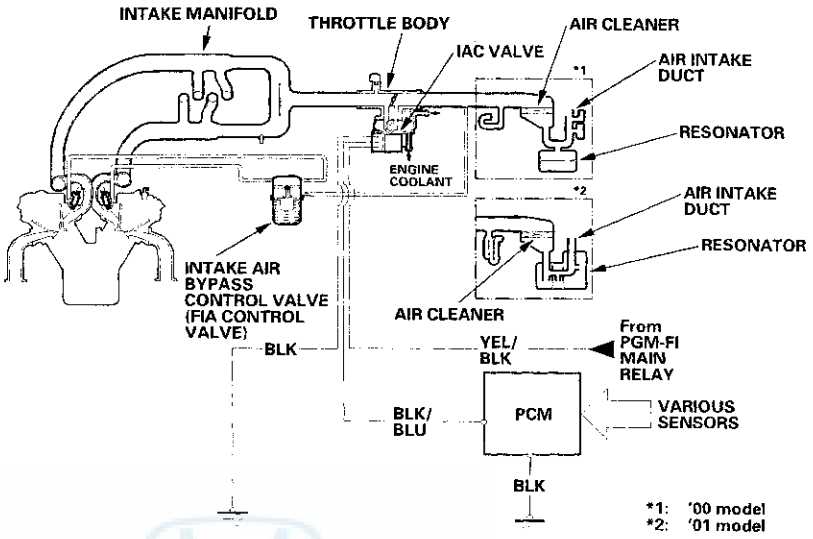

Exhaust Gas Recirculation (EGR) System Diagram

The EGR system reduces oxides of nitrogen (NOx) emissions by recirculating exhaust gas through the EGR valve and the intake manifold into the combustion chambers. The PCM memory includes the ideal EGR valve position for varying operating conditions.
The EGR valve position sensor detects the amount of EGR valve position and sends it to the PCM. The PCM then compares it with the ideal lift in its memory (based on signals sent from other sensors). If there is any difference between the two, the PCM cuts current to the EGR valve.

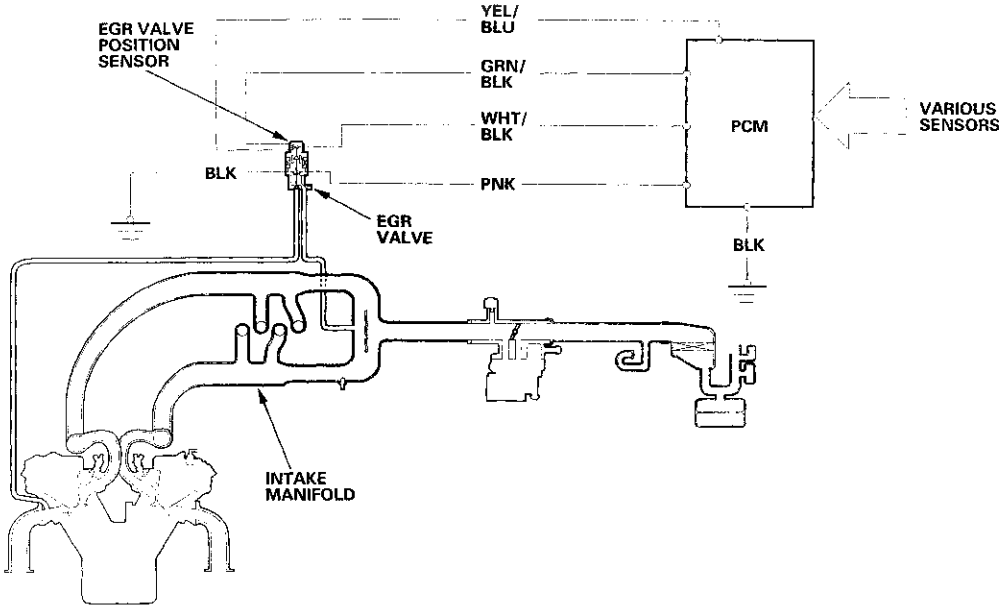

Evaporative Emission (EVAP) Control Diagram

The EVAP controls minimize the amount of fuel vapor escaping to the atmosphere. Vapor from the fuel tank is temporarily stored in the EVAP canister until it can be purged from the canister into the engine and burned.

- The EVAP canister is purged by drawing fresh air through it and into a port on the intake manifold. The purging vacuum is controlled by the EVAP canister purge valve, which is open whenever engine coolant temperature is above 147°F (64°C).
- When vapor pressure in the fuel tank is higher than the set value of the EVAP two way valve, the valve opens and regulates the flow of fuel vapor to the EVAP control canister.
- During refueling, the fuel tank vapor control valve opens with the pressure in the fuel tank, and feeds the fuel vapor to the EVAP canister.

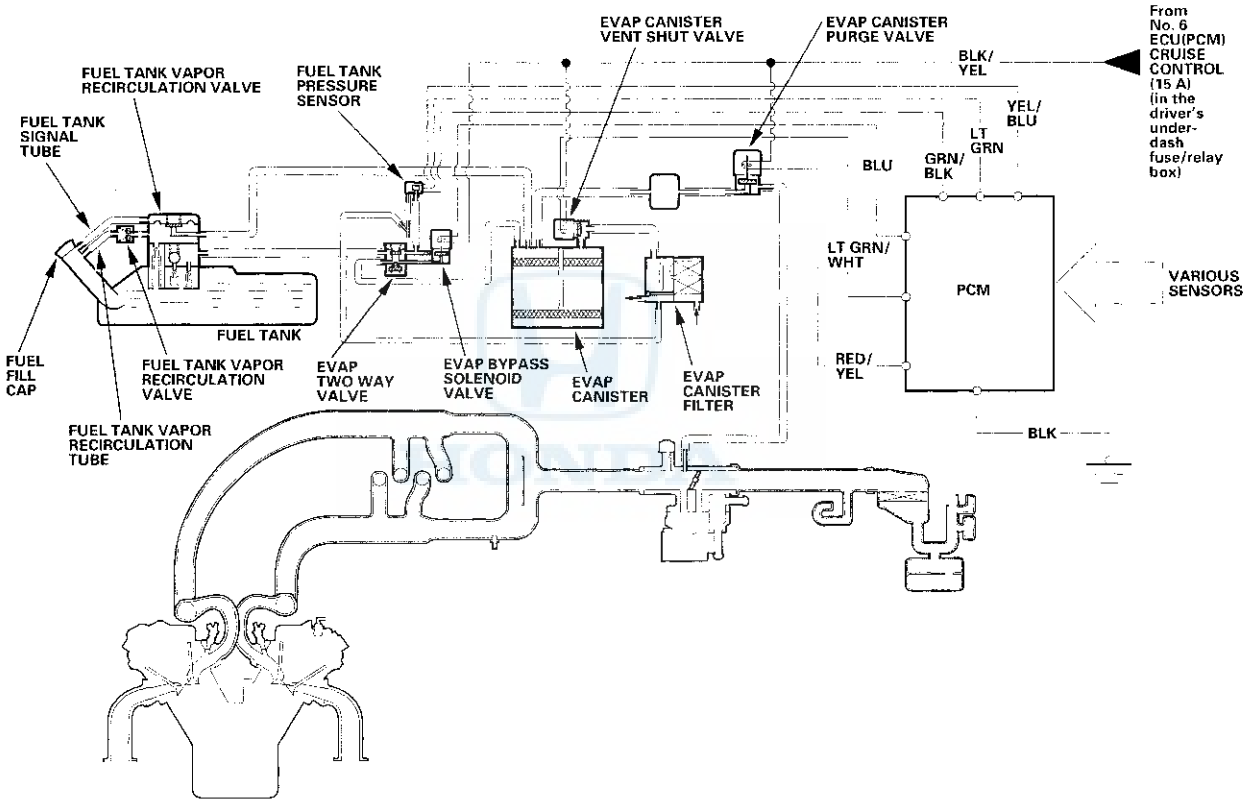

Circuit Diagram

PCM Circuit Diagram — '98-99 models:

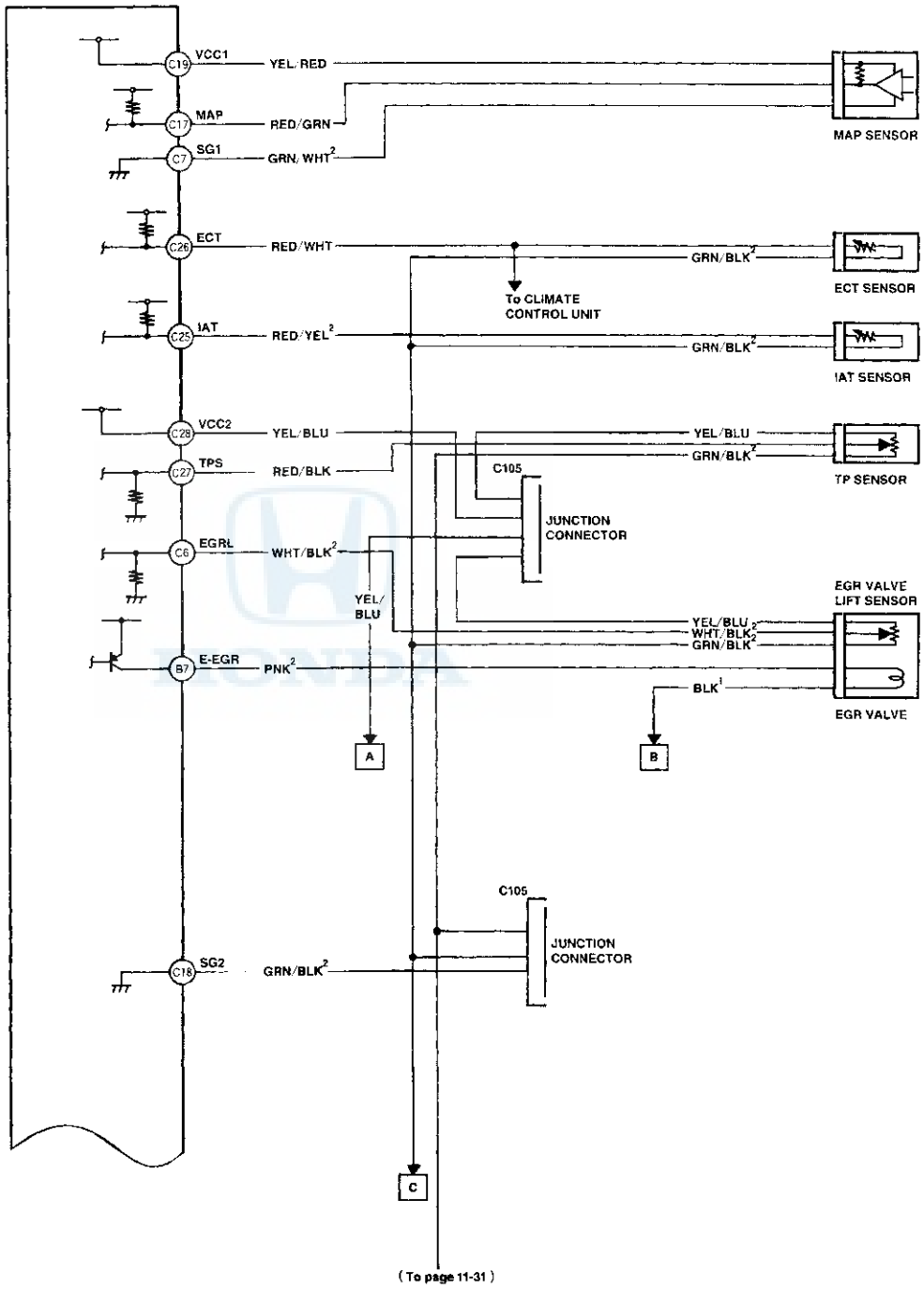

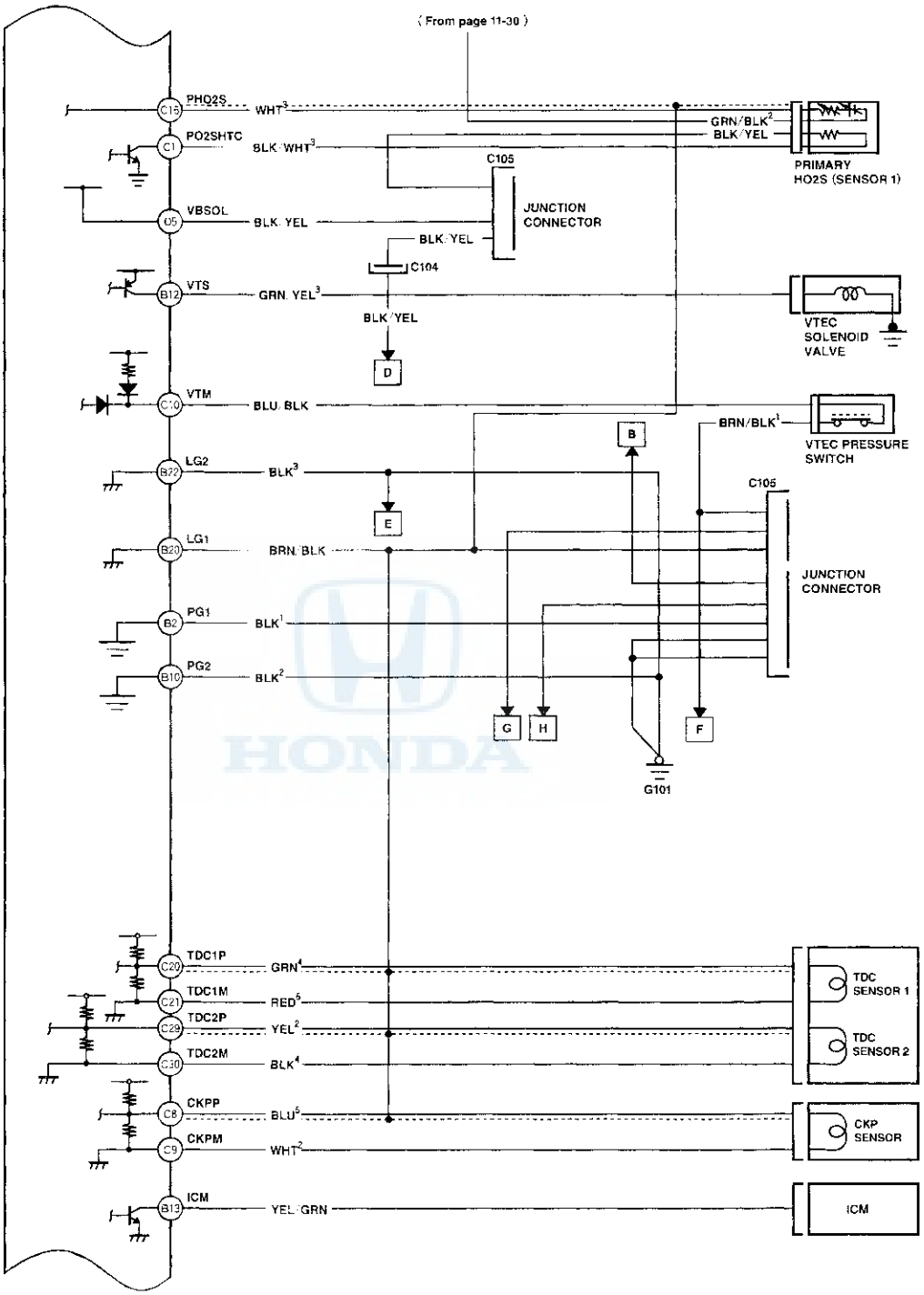
(From page 11-30)
PHO2S
C15
WHT3
GRN/BLK2
BLK/YEL
PRIMARY HO2S (SENSOR 1)
PO2SHTC
C1
BLK/WHT3
C105
JUNCTION CONNECTOR
VBSOL
D5
BLK/YEL
BLK/YEL
C104
VTS
B12
GRN/YEL3
BLK/YEL
D
VTEC SOLENOID VALVE
VTM
C10
BLU/BLK
BRN/BLK1
VTEC PRESSURE SWITCH
B
LG2
B22
BLK3
E
C105
LG1
B20
BRN/BLK
JUNCTION CONNECTOR
PG1
B2
BLK1
PG2
B10
BLK2
G
H
F
G101
TDC1P
C20
GRN4
TDC1M
C21
RED5
TDC2P
C29
YEL2
TDC2M
C30
BLK4
TDC SENSOR 1
TDC SENSOR 2
CKPP
C8
BLU5
CKPM
C9
WHT2
CKP SENSOR
ICM
B13
YEL/GRN
ICM

(cont'd)

Circuit Diagram (cont'd)

PCM Circuit Diagram (cont'd) — '98-99 models:

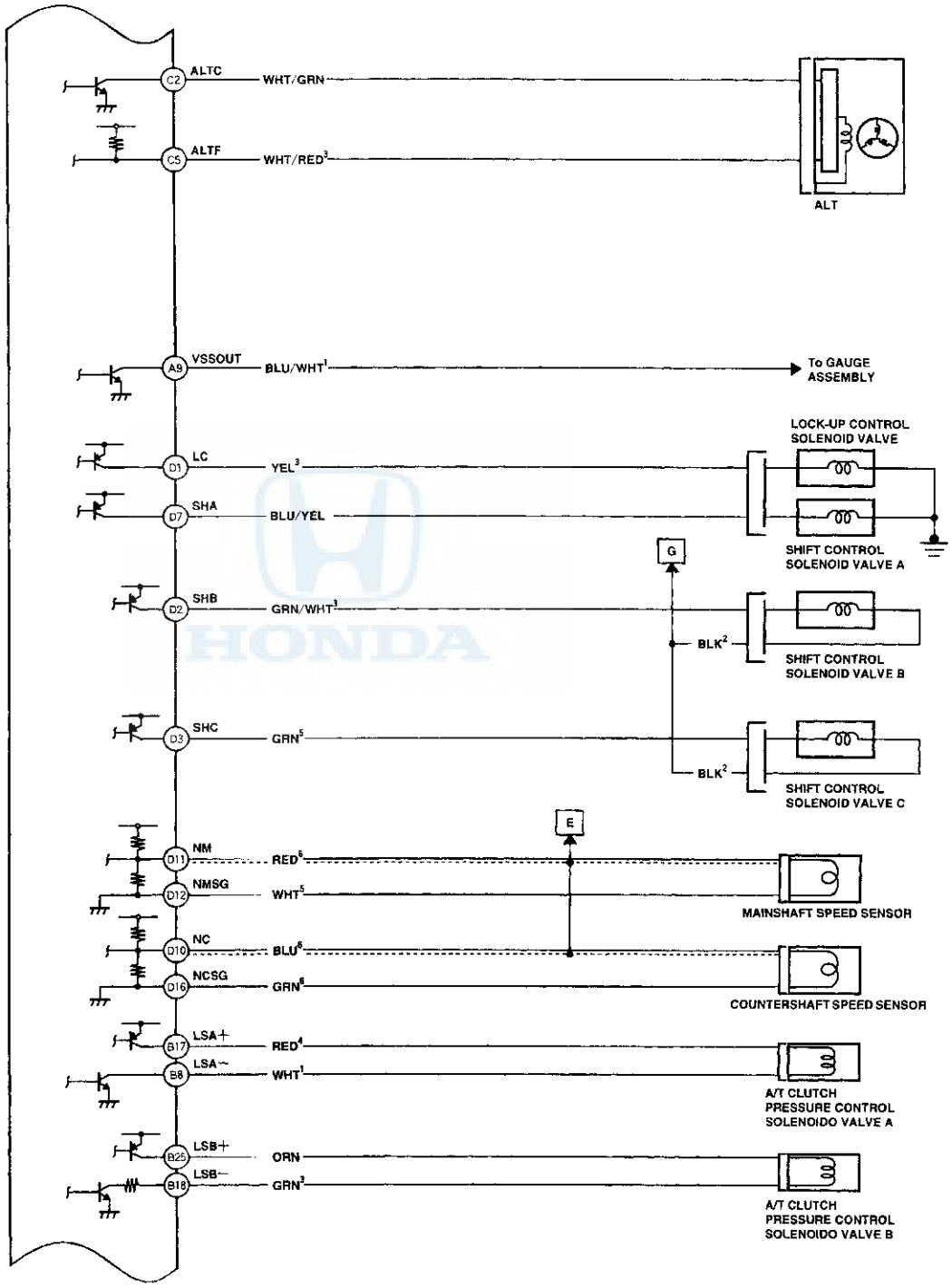

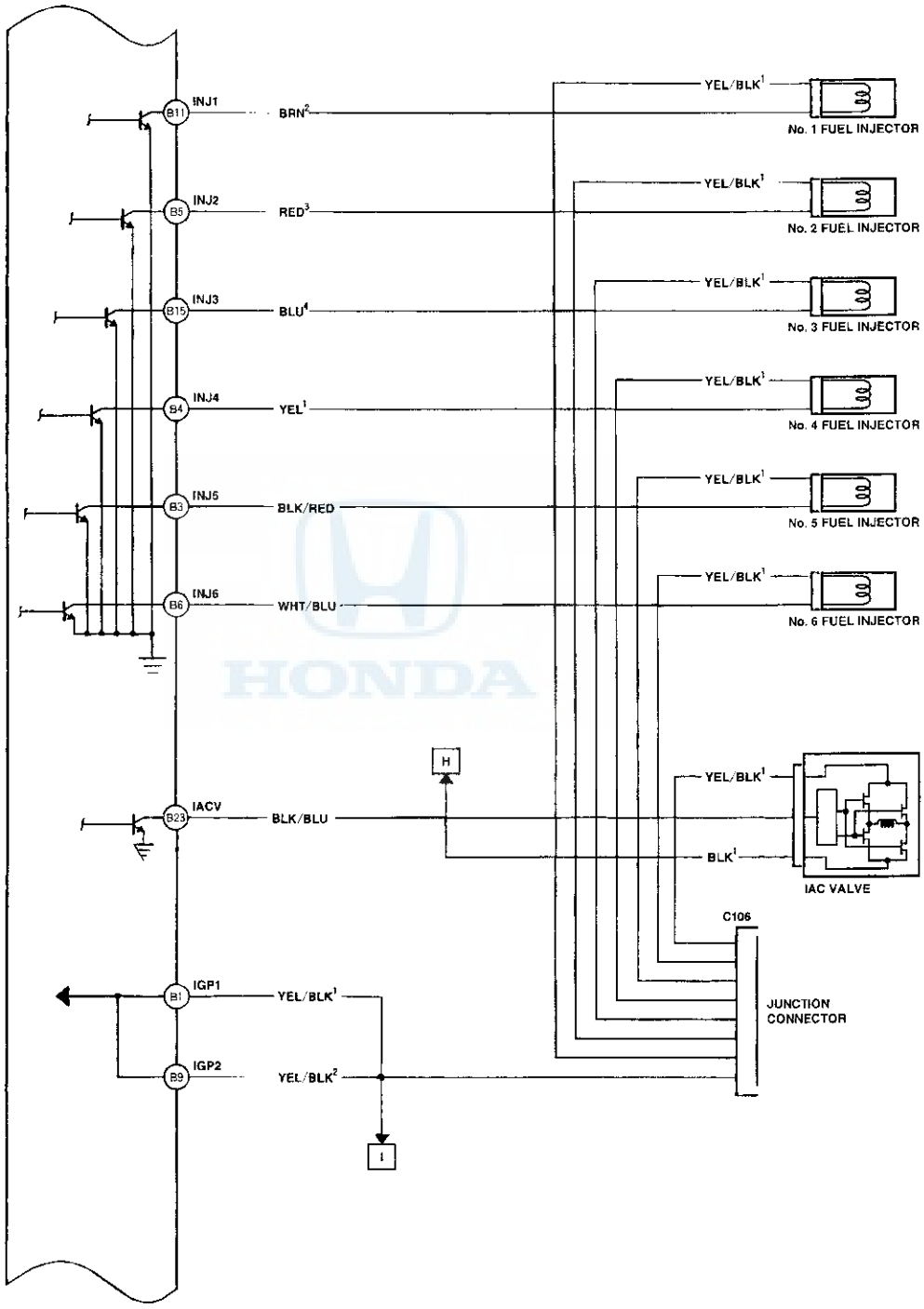
INJ1
B11
BRN[2]
YEL/BLK[1]
No. 1 FUEL INJECTOR
INJ2
B5
RED[3]
YEL/BLK[1]
No. 2 FUEL INJECTOR
INJ3
B15
BLU[4]
YEL/BLK[1]
No. 3 FUEL INJECTOR
INJ4
B4
YEL[1]
YEL/BLK[1]
No. 4 FUEL INJECTOR
INJ5
B3
BLK/RED
YEL/BLK[1]
No. 5 FUEL INJECTOR
INJ6
B6
WHT/BLU
YEL/BLK[1]
No. 6 FUEL INJECTOR
H
IACV
B23
BLK/BLU
YEL/BLK[1]
BLK[1]
IAC VALVE
C106
JUNCTION CONNECTOR
IGP1
B1
YEL/BLK[1]
IGP2
B9
YEL/BLK[2]
I

(cont'd)

Circuit Diagram (cont'd)

PCM Circuit Diagram (cont'd) — '98-99 models:

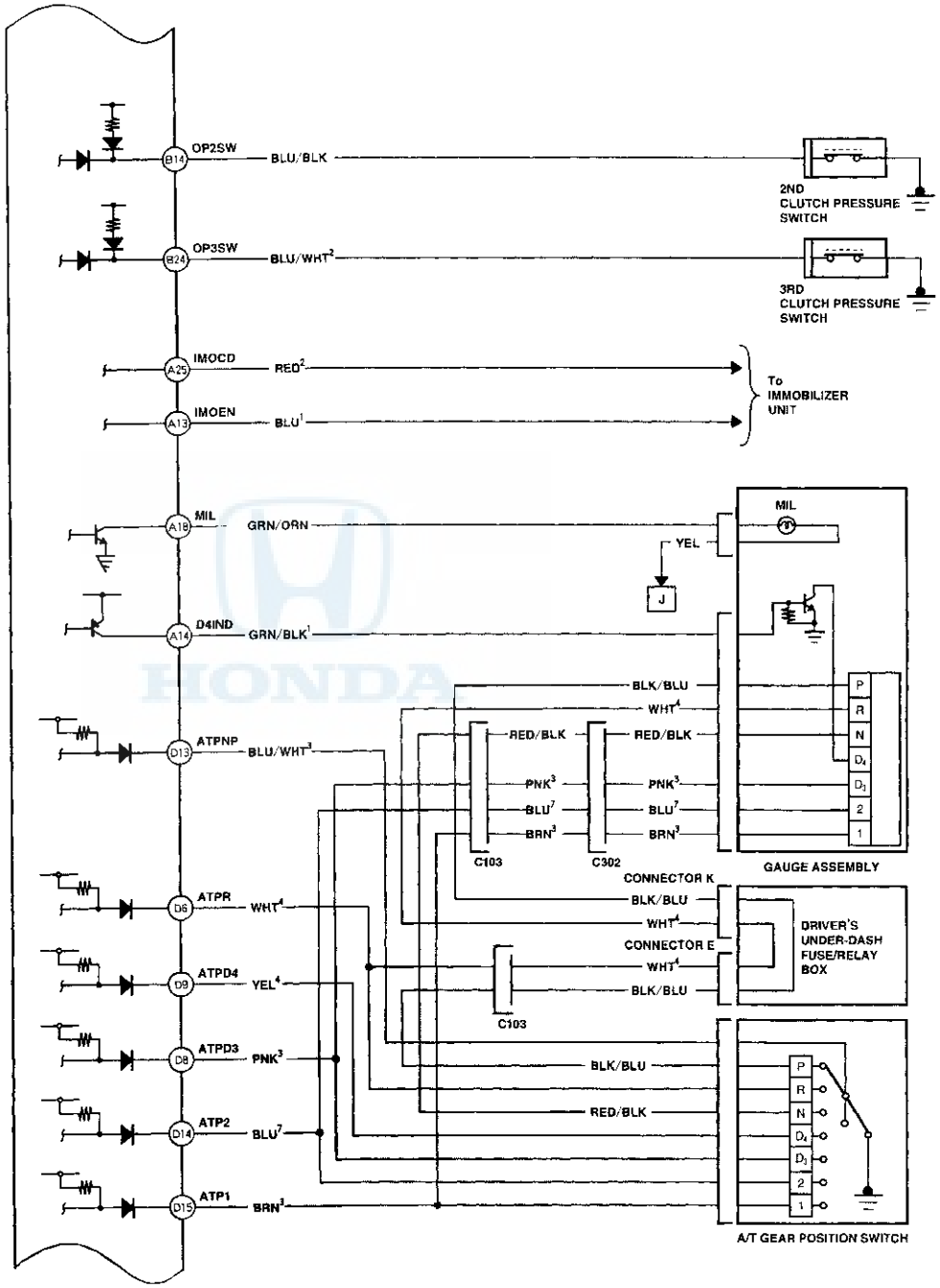

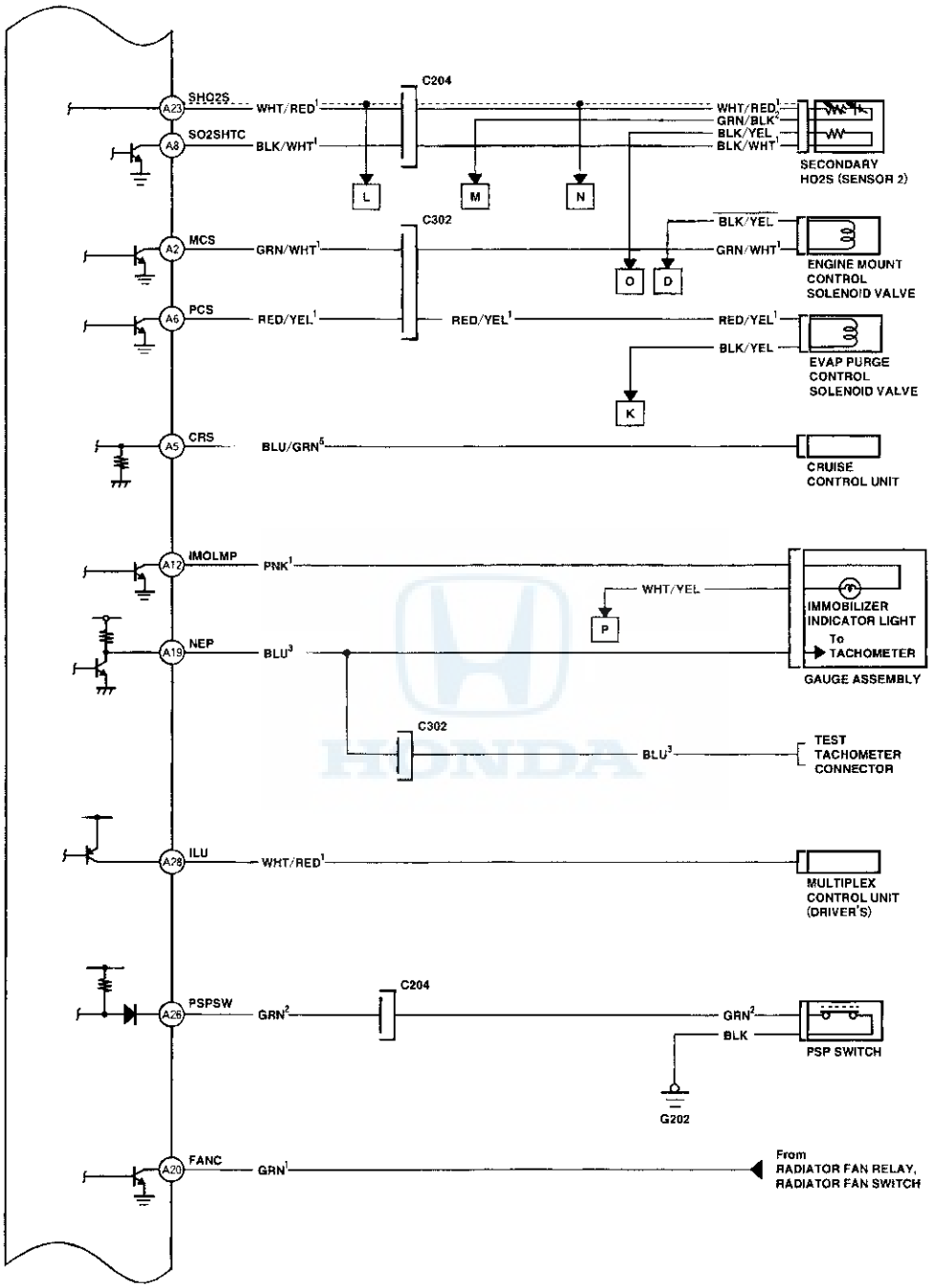
SHO2S
A23
WHT/RED1
C204
WHT/RED1
GRN/BLK2
BLK/YEL1
BLK/WHT1
SO2SHTC
A8
BLK/WHT1
SECONDARY
HO2S (SENSOR 2)
L
M
N
C302
BLK/YEL
MCS
A2
GRN/WHT1
GRN/WHT1
ENGINE MOUNT
CONTROL
SOLENOID VALVE
O
D
PCS
A6
RED/YEL1
RED/YEL1
RED/YEL1
BLK/YEL
EVAP PURGE
CONTROL
SOLENOID VALVE
K
CRS
A5
BLU/GRN5
CRUISE
CONTROL UNIT
IMOLMP
A12
PNK1
WHT/YEL
P
IMMOBILIZER
INDICATOR LIGHT
To
TACHOMETER
NEP
A19
BLU3
GAUGE ASSEMBLY
C302
BLU3
TEST
TACHOMETER
CONNECTOR
ILU
A28
WHT/RED1
MULTIPLEX
CONTROL UNIT
(DRIVER'S)
C204
PSPSW
A26
GRN2
GRN2
BLK
PSP SWITCH
G202
FANC
A20
GRN1
From
RADIATOR FAN RELAY,
RADIATOR FAN SWITCH

(cont'd)

Circuit Diagram (cont'd)

PCM Circuit Diagram (cont'd) — '98-99 models:

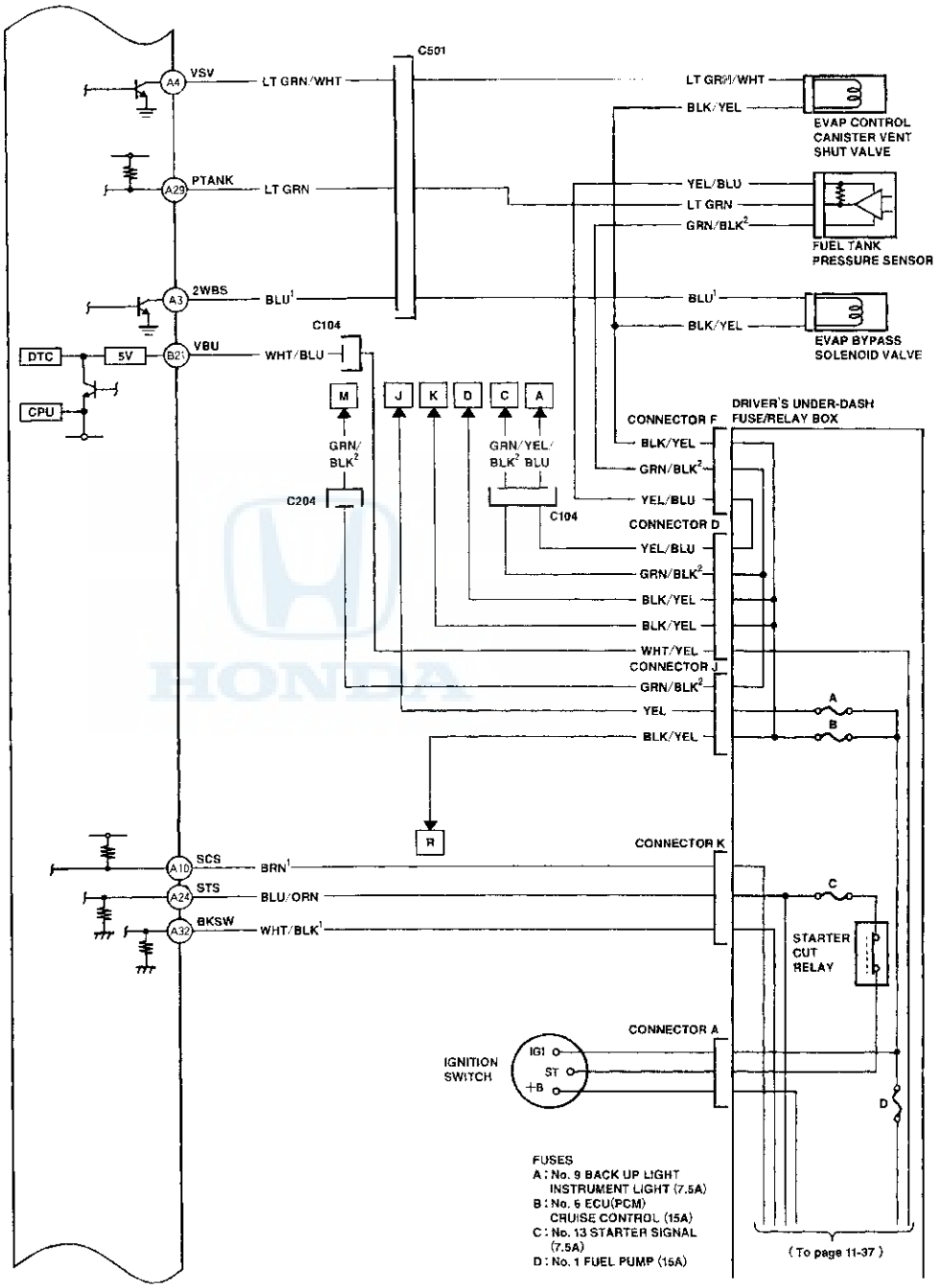

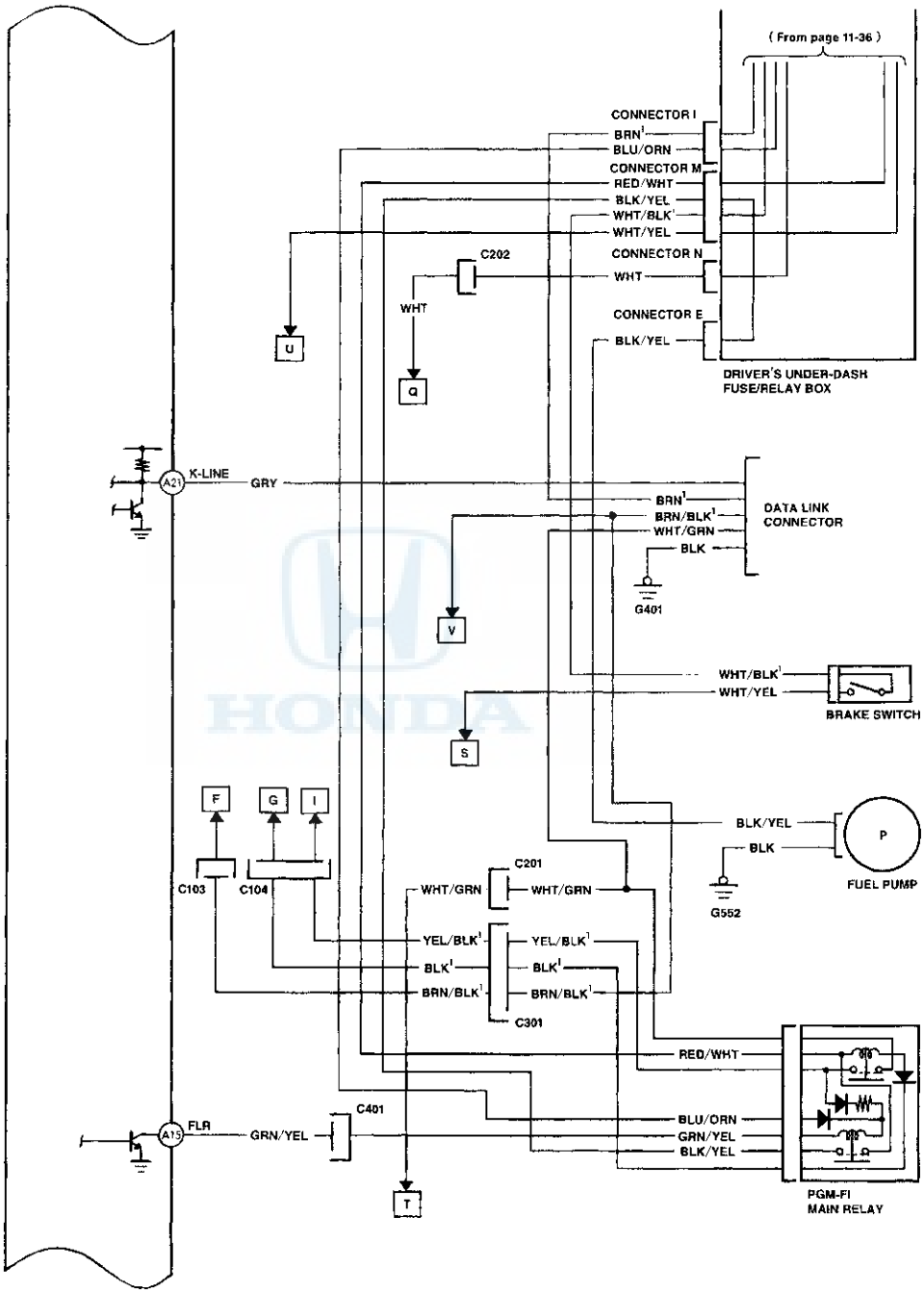
(From page 11-36)
CONNECTOR I
BRN[1]
BLU/ORN
CONNECTOR M
RED/WHT
BLK/YEL
WHT/BLK[1]
WHT/YEL
CONNECTOR N
WHT
C202
WHT
CONNECTOR E
BLK/YEL
U
Q
DRIVER'S UNDER-DASH FUSE/RELAY BOX
K-LINE
A21
GRY
BRN[1]
BRN/BLK[1]
WHT/GRN
BLK
DATA LINK CONNECTOR
G401
V
WHT/BLK[1]
WHT/YEL
BRAKE SWITCH
S
F
G
I
BLK/YEL
BLK
P
FUEL PUMP
G552
C103
C104
C201
WHT/GRN
WHT/GRN
YEL/BLK[1]
BLK[1]
BRN/BLK[1]
YEL/BLK[1]
BLK[1]
BRN/BLK[1]
C301
RED/WHT
BLU/ORN
GRN/YEL
BLK/YEL
PGM-FI MAIN RELAY
FLR
A15
GRN/YEL
C401
T

(cont'd)

Circuit Diagram (cont'd)

PCM Circuit Diagram (cont'd) — '98-99 models:

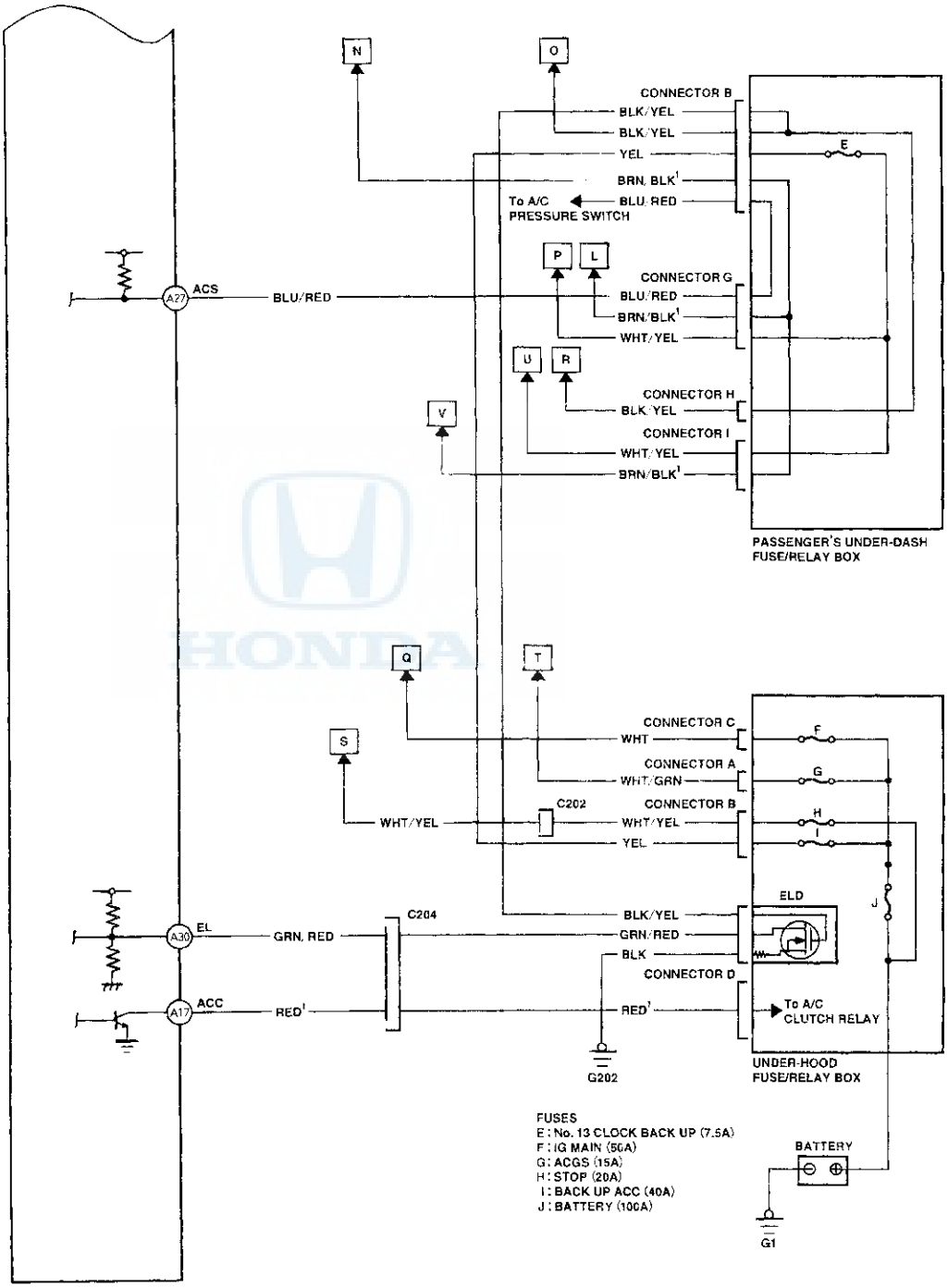

'00-01 models:

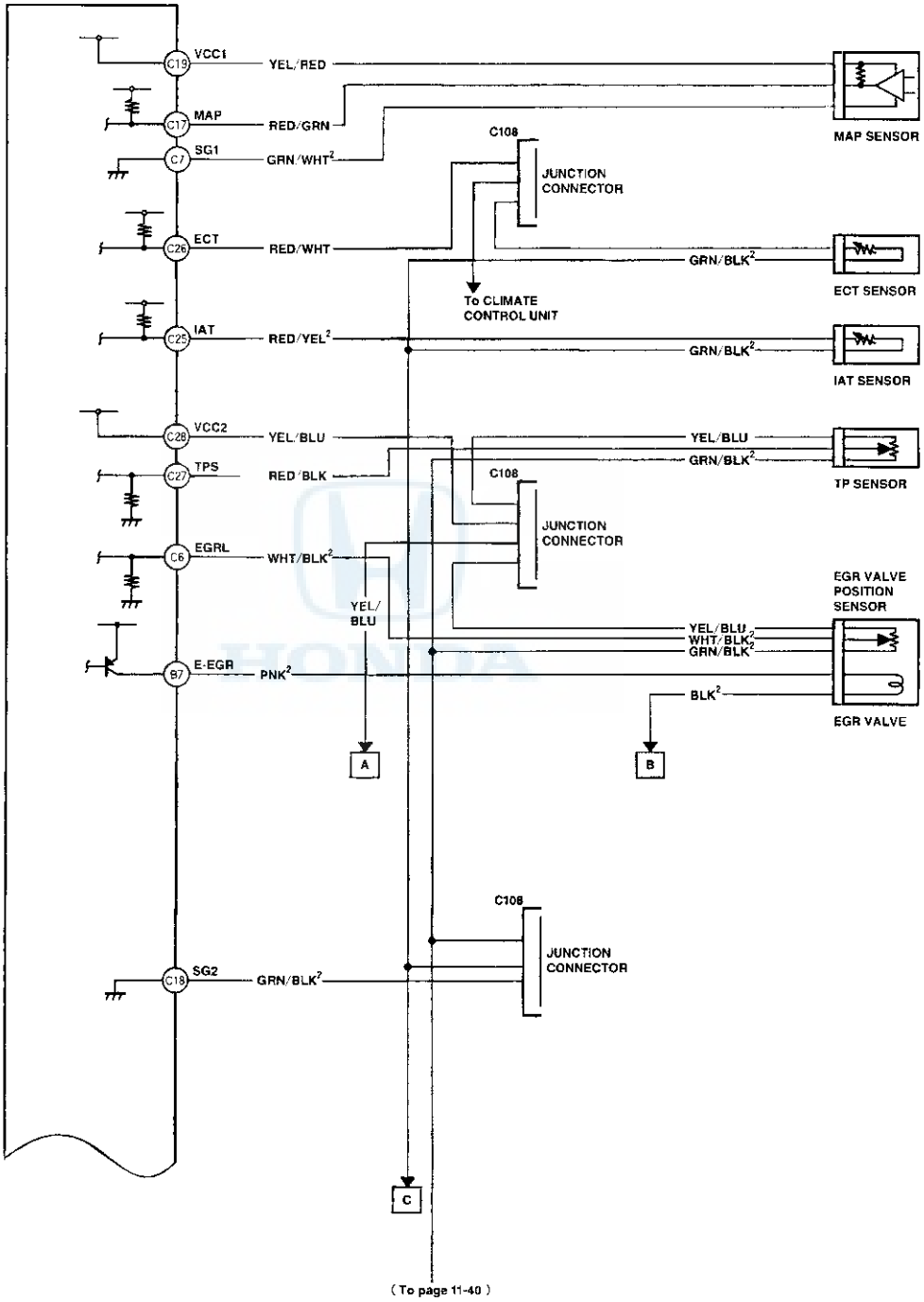

(cont'd)

Circuit Diagram (cont'd)

PCM Circuit Diagram (cont'd) — '00-01 models:

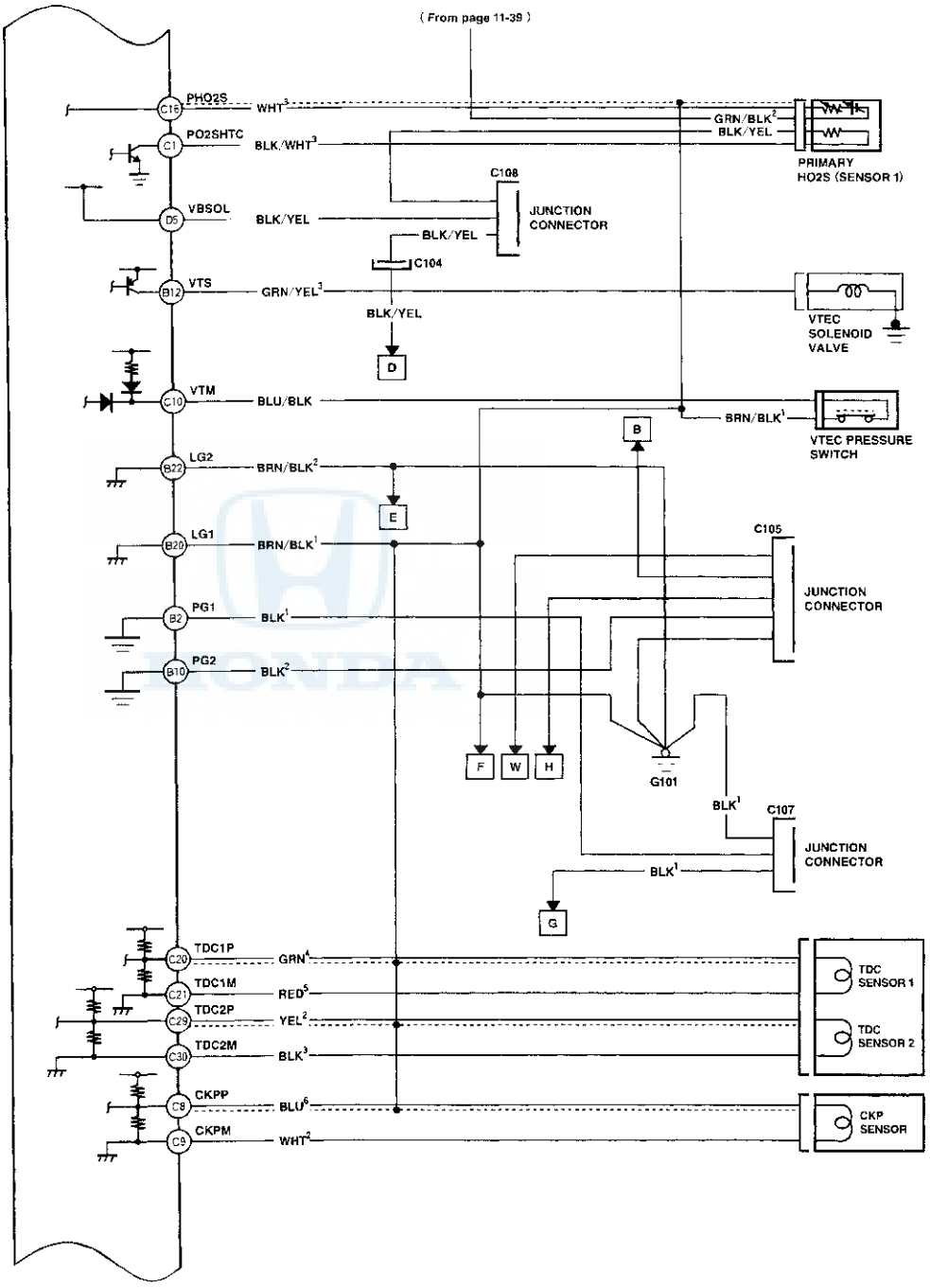

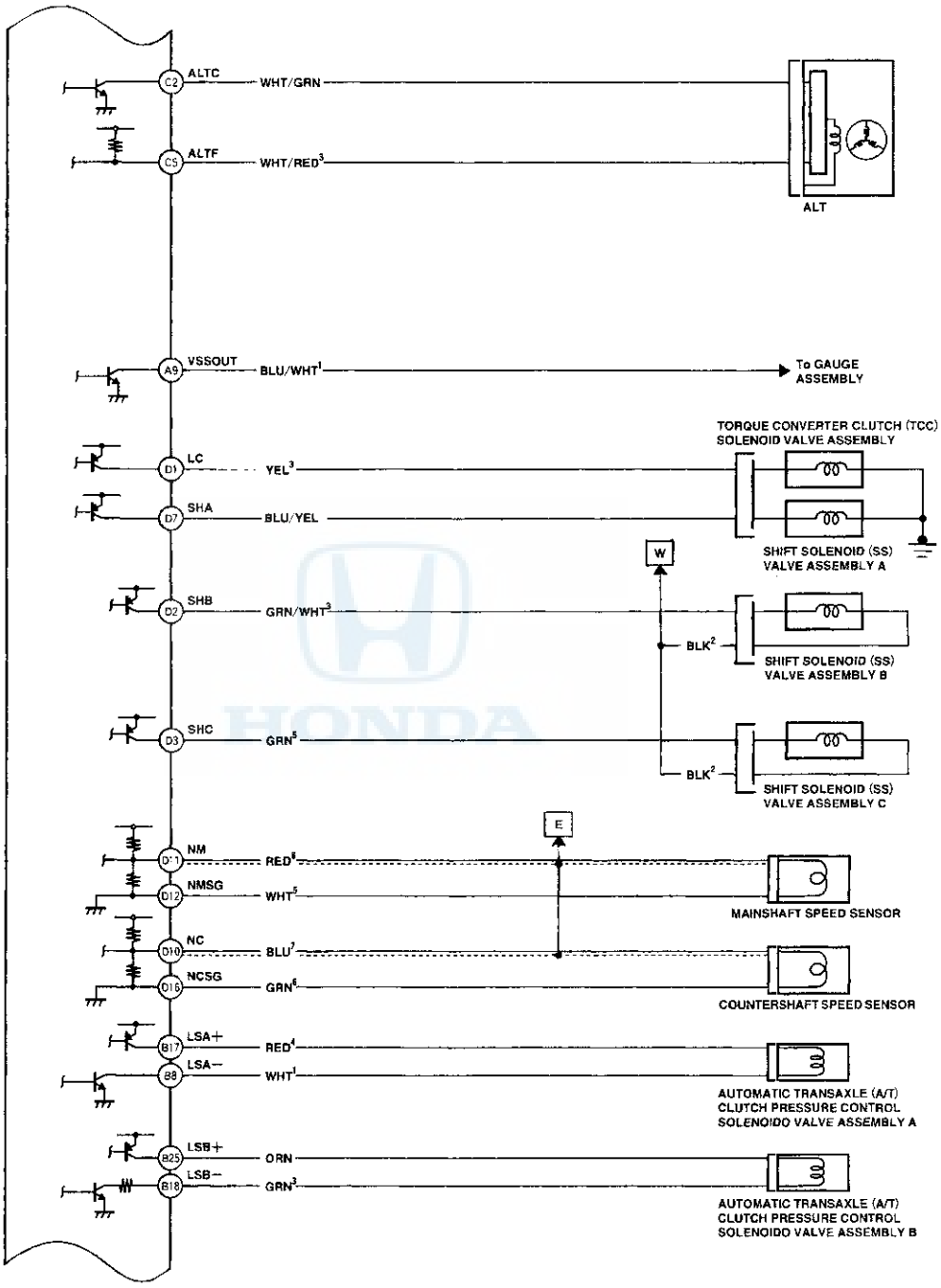
C2
ALTC
WHT/GRN
C5
ALTF
WHT/RED3
ALT
A9
VSSOUT
BLU/WHT1
To GAUGE ASSEMBLY
TORQUE CONVERTER CLUTCH (TCC) SOLENOID VALVE ASSEMBLY
D1
LC
YEL3
D7
SHA
BLU/YEL
SHIFT SOLENOID (SS) VALVE ASSEMBLY A
W
D2
SHB
GRN/WHT3
BLK2
SHIFT SOLENOID (SS) VALVE ASSEMBLY B
D3
SHC
GRN5
BLK2
SHIFT SOLENOID (SS) VALVE ASSEMBLY C
E
D11
NM
RED8
D12
NMSG
WHT5
MAINSHAFT SPEED SENSOR
D10
NC
BLU7
D16
NCSG
GRN6
COUNTERSHAFT SPEED SENSOR
B17
LSA+
RED4
B8
LSA−
WHT1
AUTOMATIC TRANSAXLE (A/T) CLUTCH PRESSURE CONTROL SOLENOIDO VALVE ASSEMBLY A
B25
LSB+
ORN
B18
LSB−
GRN3
AUTOMATIC TRANSAXLE (A/T) CLUTCH PRESSURE CONTROL SOLENOIDO VALVE ASSEMBLY B

(cont'd)

Circuit Diagram (cont'd)

PCM Circuit Diagram (cont'd) — '00-01 models:

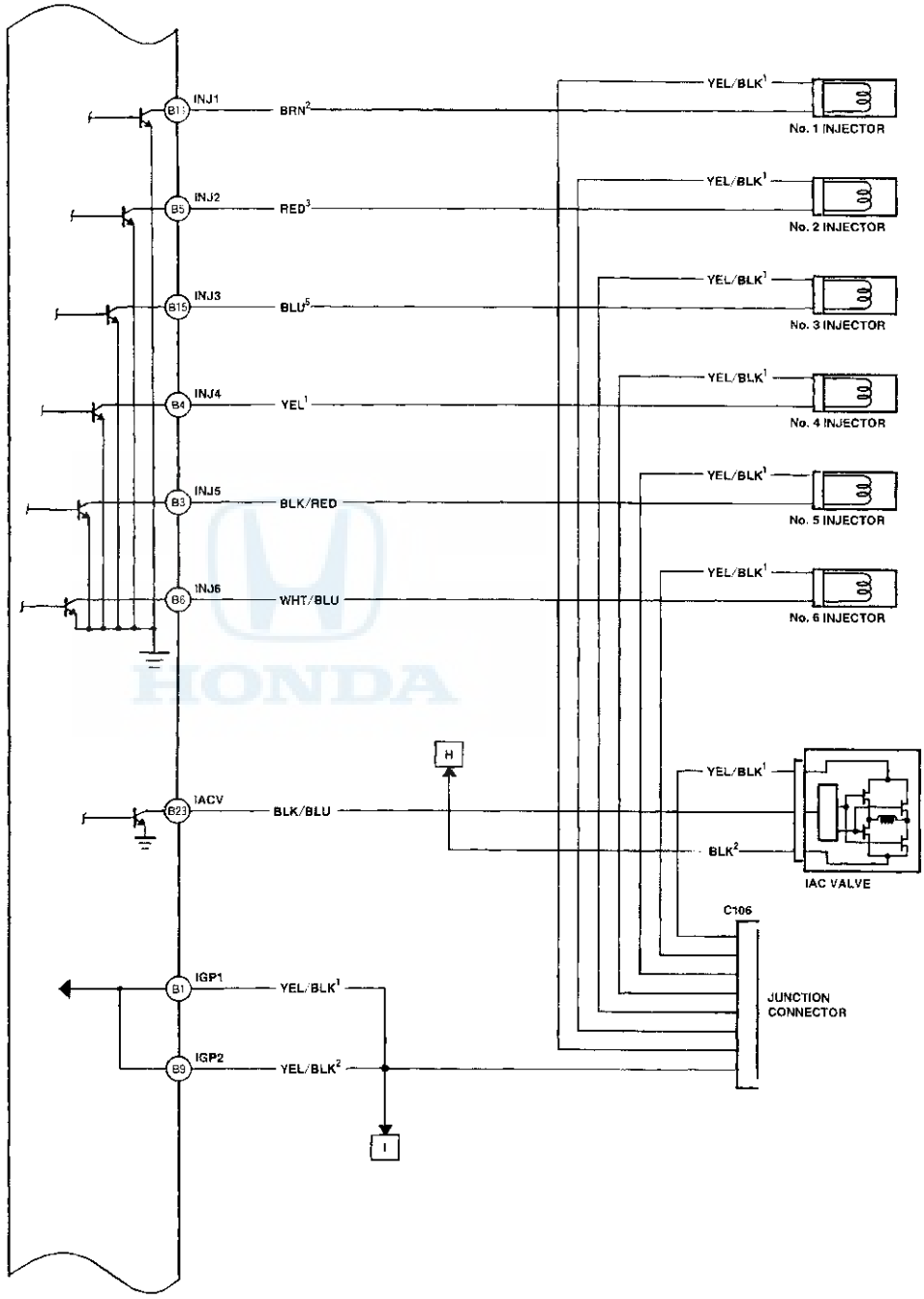

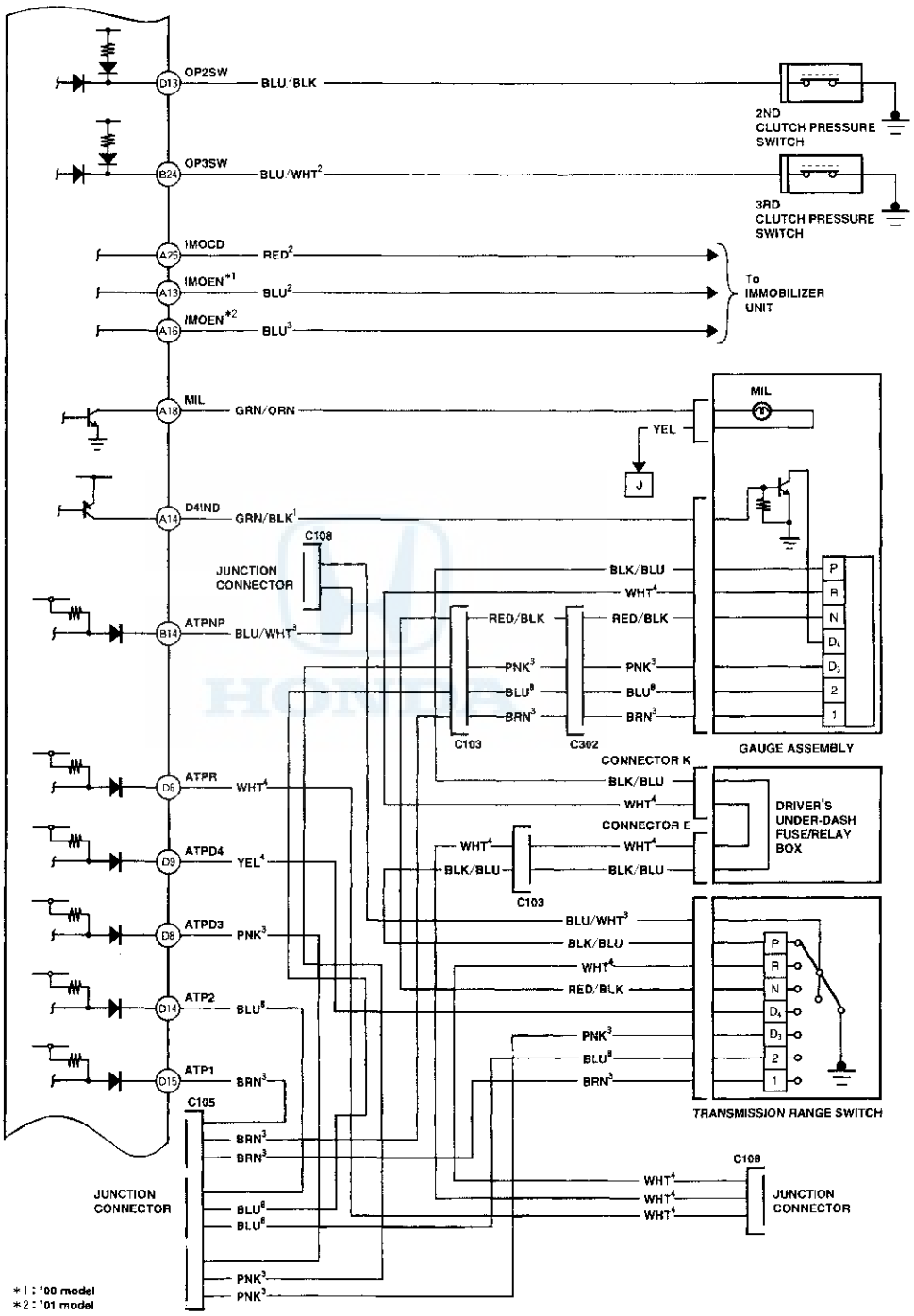
OP2SW
D13
BLU/BLK
2ND CLUTCH PRESSURE SWITCH
OP3SW
B24
BLU/WHT2
3RD CLUTCH PRESSURE SWITCH
IMOCD
A25
RED2
IMOEN*1
A13
BLU2
IMOEN*2
A16
BLU3
To IMMOBILIZER UNIT
MIL
A18
GRN/ORN
YEL
D4IND
A14
GRN/BLK1
C108
JUNCTION CONNECTOR
BLK/BLU
WHT4
ATPNP
B14
BLU/WHT3
RED/BLK
PNK3
BLU8
BRN3
C103
C302
P
R
N
D4
D3
2
1
GAUGE ASSEMBLY
CONNECTOR K
ATPR
D6
WHT4
DRIVER'S UNDER-DASH FUSE/RELAY BOX
CONNECTOR E
ATPD4
D9
YEL4
BLU/WHT3
ATPD3
D8
PNK3
ATP2
D14
BLU8
ATP1
D15
BRN3
TRANSMISSION RANGE SWITCH
C105
JUNCTION CONNECTOR
*1 : '00 model
*2 : '01 model

(cont'd)

Circuit Diagram (cont'd)

PCM Circuit Diagram (cont'd) — '00-01 models:

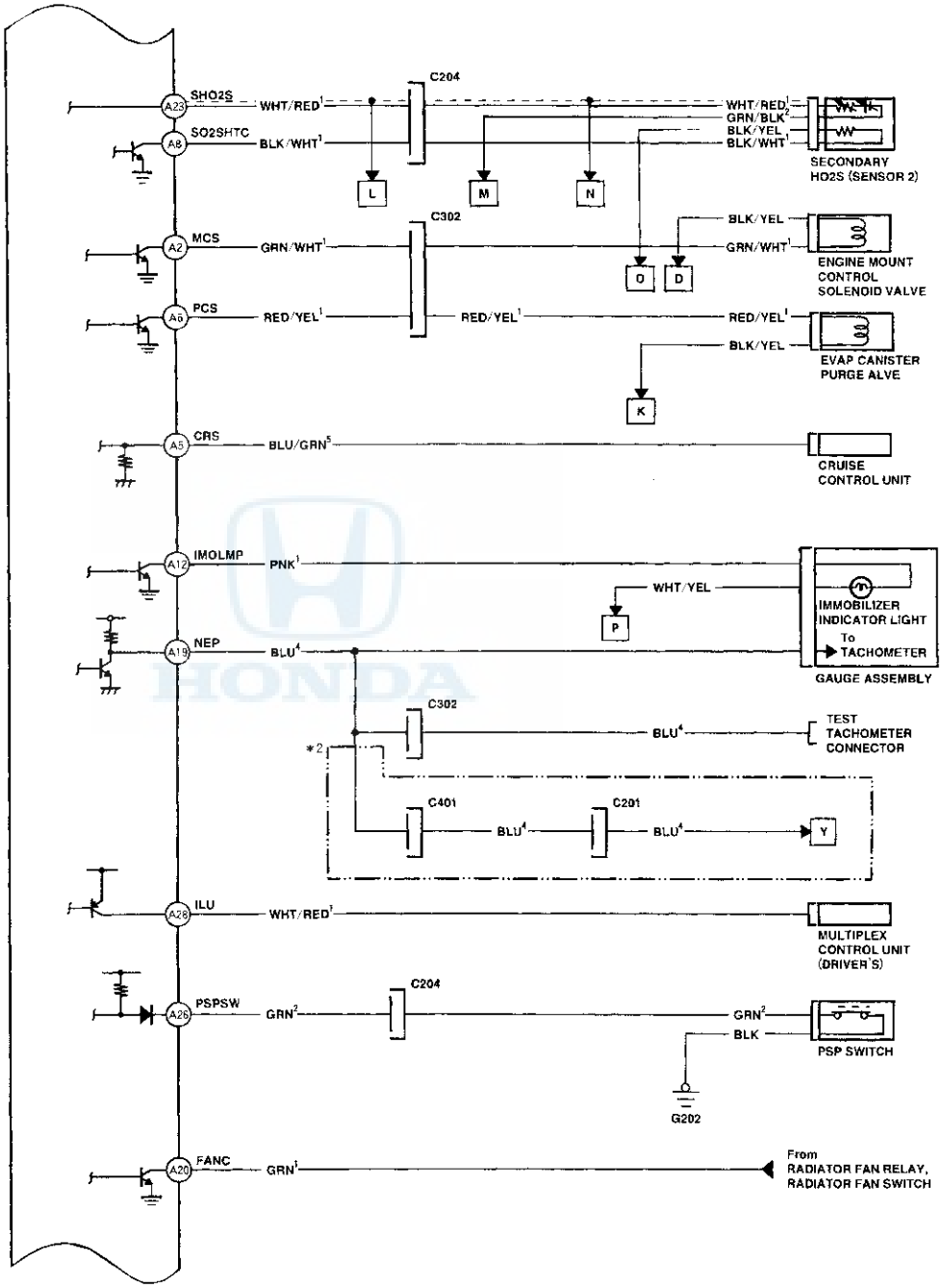

*2: '01 model

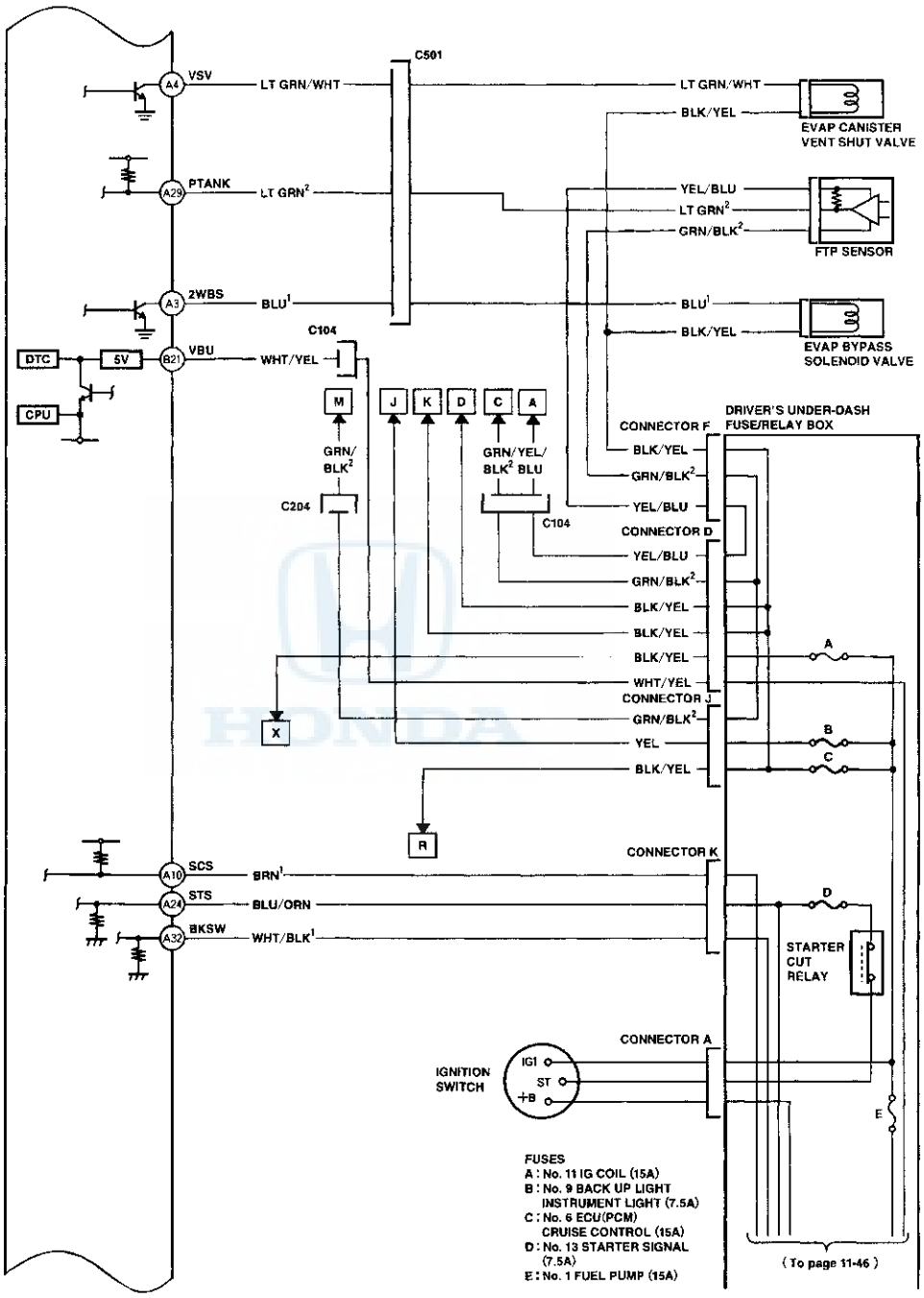
C501
VSV
A4
LT GRN/WHT
LT GRN/WHT
BLK/YEL
EVAP CANISTER VENT SHUT VALVE
PTANK
A29
LT GRN²
YEL/BLU
LT GRN²
GRN/BLK²
FTP SENSOR
2WBS
A3
BLU¹
BLU¹
BLK/YEL
EVAP BYPASS SOLENOID VALVE
C104
DTC
5V
VBU
B21
WHT/YEL
CPU
M
J
K
D
C
A
GRN/BLK²
GRN/YEL/BLK² BLU
C204
C104
DRIVER'S UNDER-DASH FUSE/RELAY BOX
CONNECTOR F
BLK/YEL
GRN/BLK²
YEL/BLU
CONNECTOR D
YEL/BLU
GRN/BLK²
BLK/YEL
BLK/YEL
BLK/YEL
WHT/YEL
CONNECTOR J
GRN/BLK²
YEL
BLK/YEL
A
B
C
X
R
CONNECTOR K
SCS
A10
BRN¹
STS
A24
BLU/ORN
BKSW
A32
WHT/BLK¹
D
STARTER CUT RELAY
CONNECTOR A
IGNITION SWITCH
IG1
ST
+B
E
FUSES
A : No. 11 IG COIL (15A)
B : No. 9 BACK UP LIGHT INSTRUMENT LIGHT (7.5A)
C : No. 6 ECU(PCM) CRUISE CONTROL (15A)
D : No. 13 STARTER SIGNAL (7.5A)
E : No. 1 FUEL PUMP (15A)
(To page 11-46)

(cont'd)

Circuit Diagram (cont'd)

PCM Circuit Diagram (cont'd) — '00-01 models:

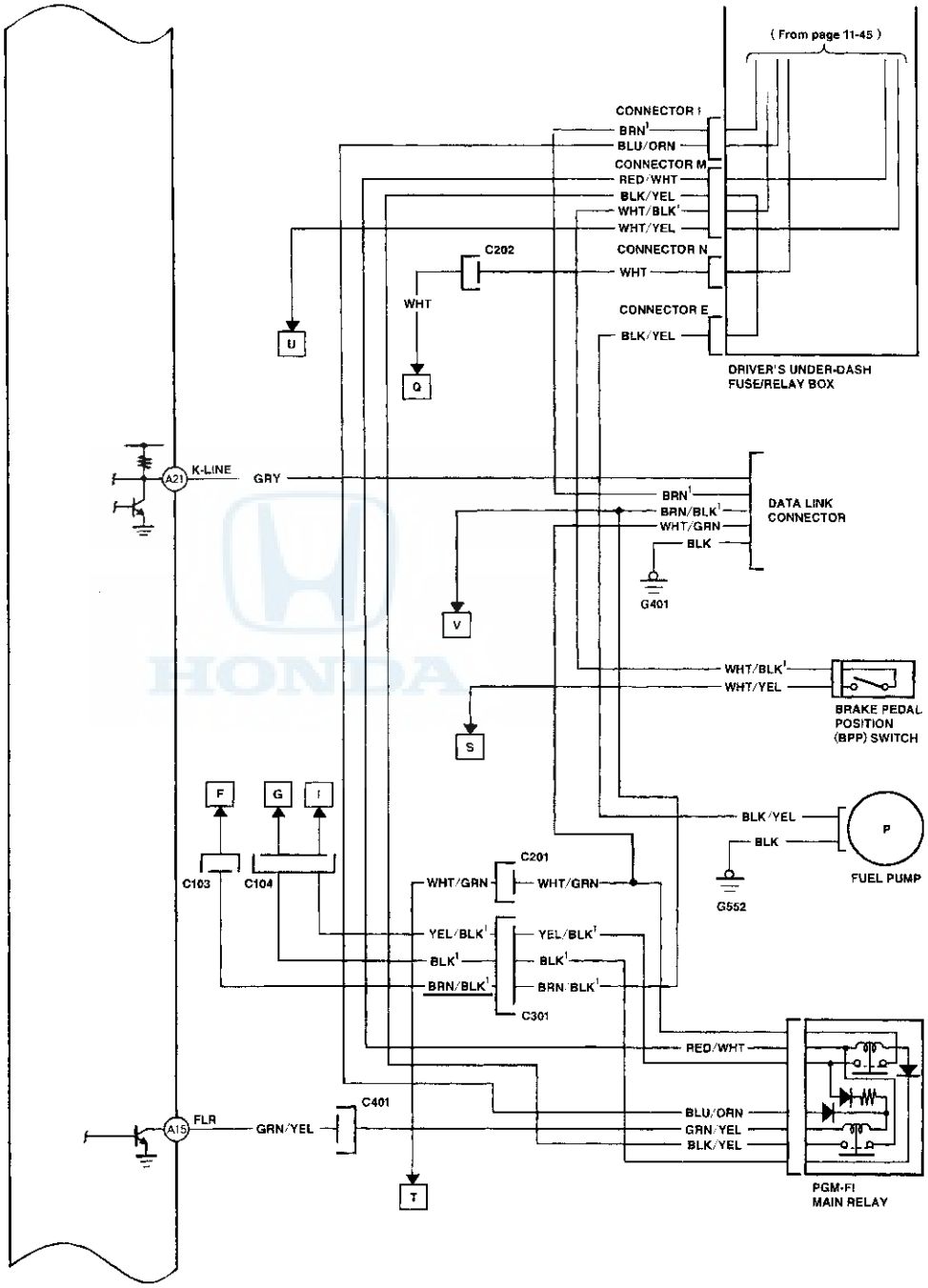

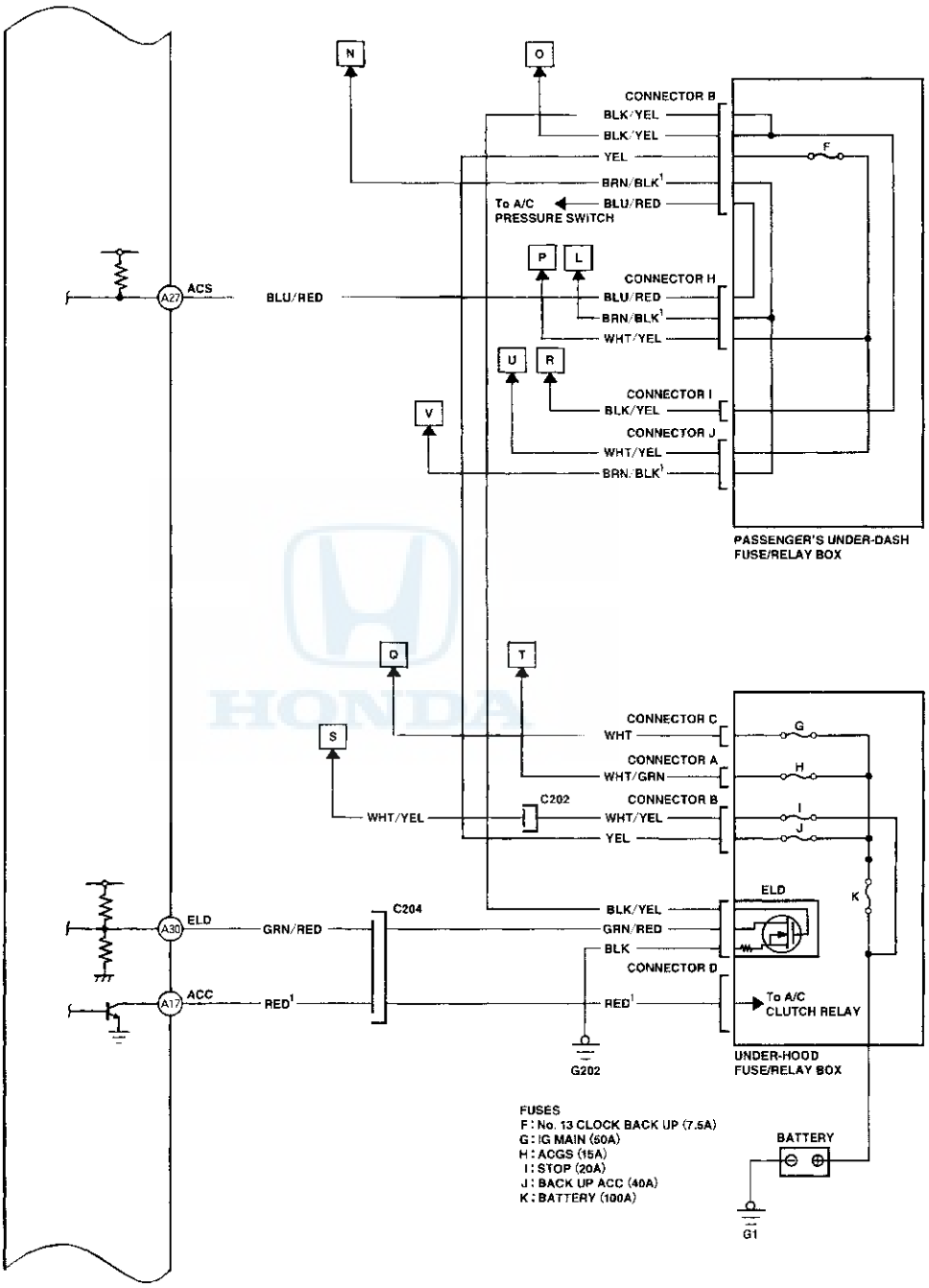
N
O
CONNECTOR B
BLK/YEL
BLK/YEL
YEL
BRN/BLK[1]
To A/C PRESSURE SWITCH
BLU/RED
F
P
L
CONNECTOR H
BLU/RED
BRN/BLK[1]
WHT/YEL
U
R
CONNECTOR I
BLK/YEL
V
CONNECTOR J
WHT/YEL
BRN/BLK[1]
PASSENGER'S UNDER-DASH FUSE/RELAY BOX
ACS
A27
BLU/RED
Q
T
S
CONNECTOR C
WHT
G
CONNECTOR A
WHT/GRN
H
C202
CONNECTOR B
WHT/YEL
WHT/YEL
I
J
YEL
ELD
K
A30
ELD
GRN/RED
C204
BLK/YEL
GRN/RED
BLK
CONNECTOR D
A17
ACC
RED[1]
RED[1]
To A/C CLUTCH RELAY
G202
UNDER-HOOD FUSE/RELAY BOX
FUSES
F : No. 13 CLOCK BACK UP (7.5A)
G : IG MAIN (50A)
H : ACGS (15A)
I : STOP (20A)
J : BACK UP ACC (40A)
K : BATTERY (100A)
BATTERY
G1

(cont'd)

Circuit Diagram (cont'd)

PCM Circuit Diagram (cont'd) — '00-01 models:

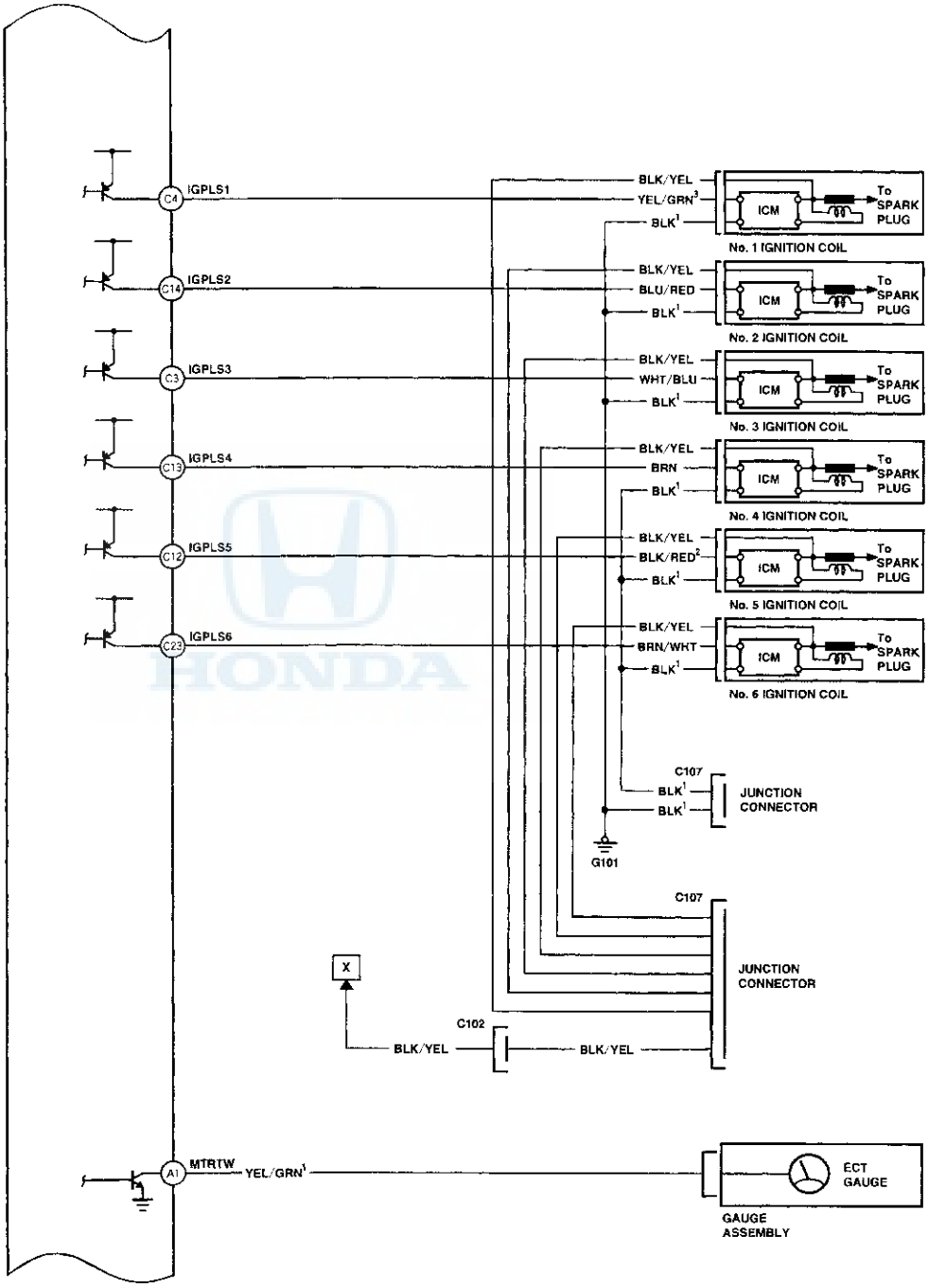

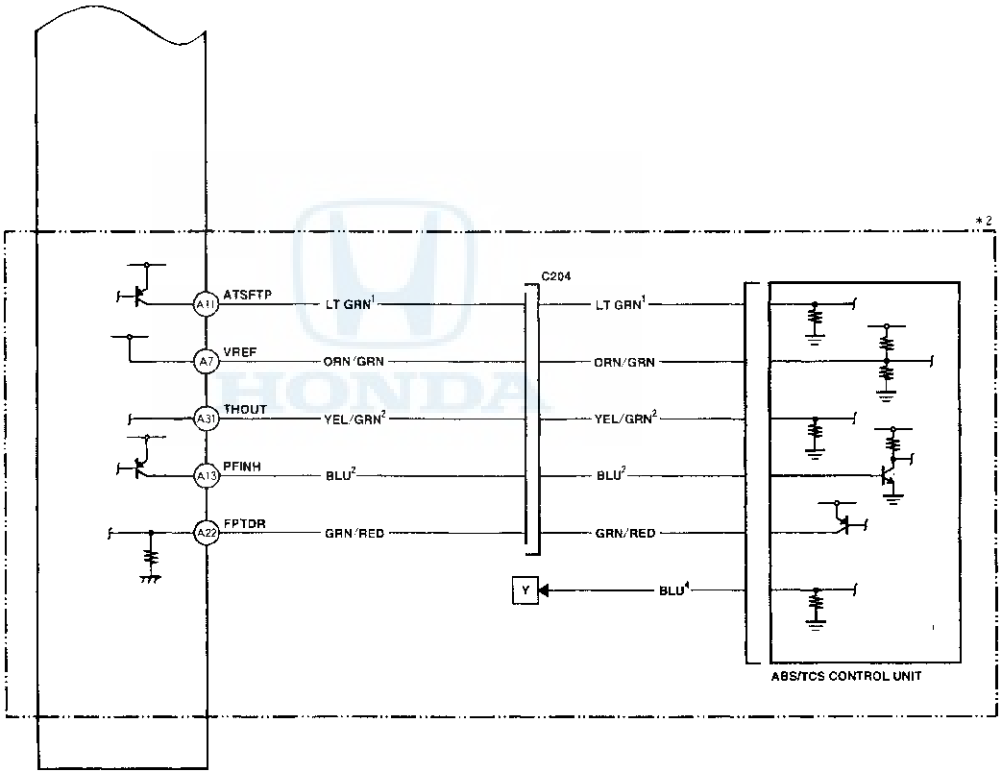
*2
A11
ATSFTP
LT GRN[1]
A7
VREF
ORN/GRN
A31
THOUT
YEL/GRN[2]
A13
PFINH
BLU[2]
A22
FPTDR
GRN/RED
C204
LT GRN[1]
ORN/GRN
YEL/GRN[2]
BLU[2]
GRN/RED
Y
BLU[4]
ABS/TCS CONTROL UNIT

*2 : '01 model

Component Location Index

NOTE: The illustration shows '00 model.

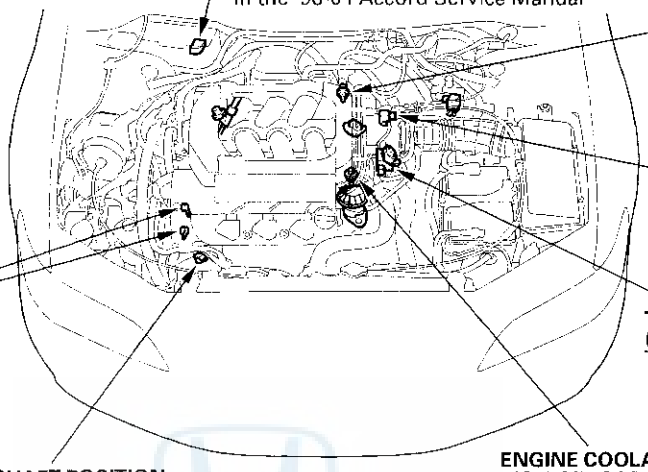

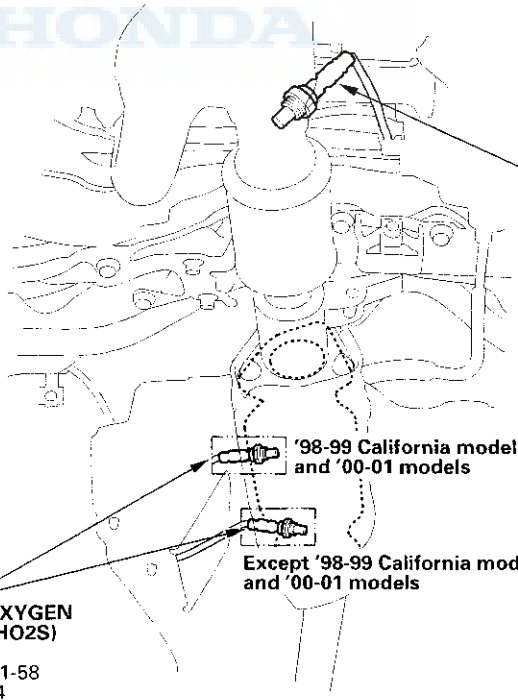

NOTE: The illustration shows '00 model.

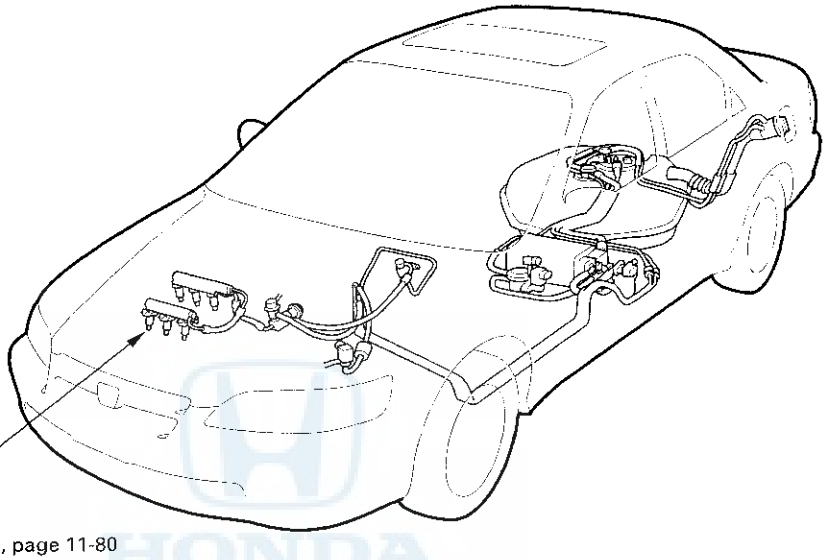

INJECTORS
Replacement, page 11-80

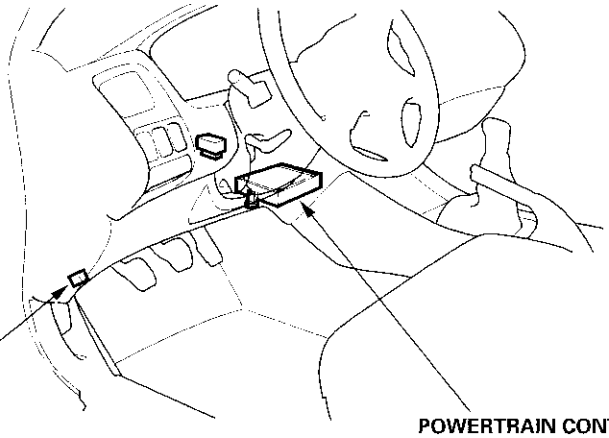

DATA LINK CONNECTOR (DLC)
General Troubleshooting Information,
page 11-3
in the '98-01 Accord Service Manual

POWERTRAIN CONTROL MODULE (PCM)
General Troubleshooting Information,
page 11-3
in the '98-01 Accord Service Manual
Troubleshooting, page 11-90
in the '98-01 Accord Service Manual

DTC Troubleshooting

DTC P0122: TP Sensor Circuit Low Voltage

1. Start the engine. Hold the engine at 3,000 rpm with no load (in Park or neutral) until the radiator fan comes on, then turn the ignition switch OFF.

2. Turn the ignition switch ON(II).

3. Check the throttle position with the scan tool.

   Is there approx. 10% or 0.5 V when the throttle is fully closed and approx. 90% or 0.5 V when the throttle is fully opened?

   YES—Intermittent failure, system is OK at this time. Check for poor connections or loose wires at the TP sensor and the PCM. ■

   NO—Go to step 4.

4. Turn the ignition switch OFF.

5. Disconnect the TP sensor connector.

6. Turn the ignition switch ON (II).

7. Measure voltage between the TP sensor 3P connector terminals No. 1 and No. 3.

TP SENSOR 3P CONNECTOR

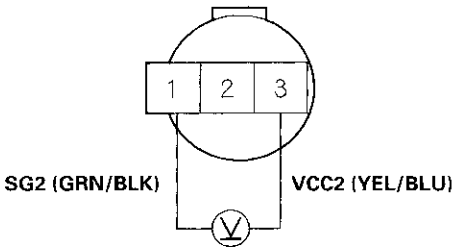

Wire side of female terminals

Is there approx. 5 V?

YES—Go to step 8.

NO—Go to step 19.

8. Turn the ignition switch OFF.

9. At the sensor side, measure resistance between the TP sensor 3P connector terminals No. 1 and No. 2 with the throttle fully closed.

TP SENSOR 3P CONNECTOR

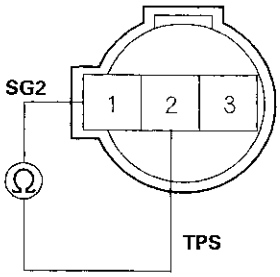

Terminal side of male terminals

Is there approx. 0.5—0.9 kΩ ?

YES—Go to step 10.

NO—Replace the throttle body. ■

10. Measure resistance between the TP sensor 3P connector terminals No. 2 and No. 3 with the throttle fully closed.

TP SENSOR 3P CONNECTOR

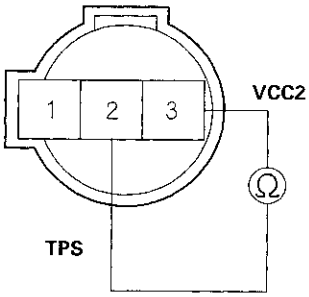

Terminal side of male terminals

Is there approx. 4.5kΩ ?

YES—Go to step 11.

NO—Replace the throttle body. ■

11. Disconnec the PCM connector C (31P) connector.

12. At the wire harness side, check for continuity between TP sensor 3P connector terminals No. 2 and body ground.

TP SENSOR 3P CONNECTOR

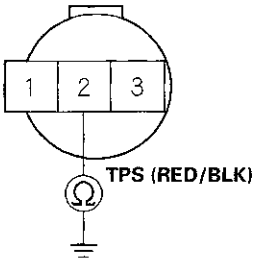

Wire side of female terminals

Is there continuity?

YES – Repair short in the wire between the PCM (C 27) and the TP sensor. ■

NO – Go to step 13 ('01 model). Go to step 17 ('98-00 models).

13. Disconnect PCM connector A (32P).

14. Check for continuity between body ground and PCM connector terminal A31.

PCM CONNECTOR A (32P)

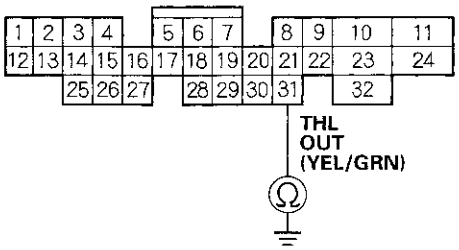

Wire side of female terminals

Is there continuity?

YES – Go to step 15.

NO – Go to step 17.

15. Disconnect the ABS/TCS control unit 16P connector.

16. Check for continuity between body ground and PCM connector terminal A31.

PCM CONNECTOR A (32P)

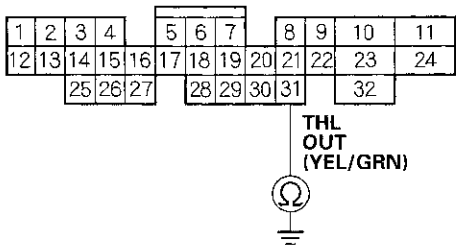

Wire side of female terminals

Is there continuity?

YES – Repair short in the wire between the ABS/TCS control unit and PCM (A31). ■

NO – Substitute a known-good ABS/TCS control unit and recheck. If the symptom/indication goes away, replace the original ABS/TCS control unit. ■

17. Connect PCM connector terminal C27 and body ground with a jumper wire.

PCM CONNECTOR C (31P)

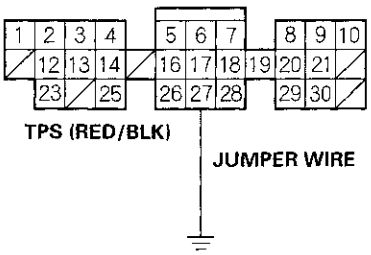

Wire side of female terminals

(cont'd)

DTC Troubleshooting (cont'd)

18. At the wire harness side, check for continuity between TP sensor 3P connector terminals No. 2 and body ground.

TP SENSOR 3P CONNECTOR

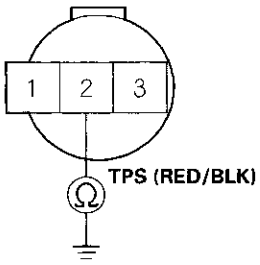

Wire side of female terminals

Is there continuity?

YES – Substitute a known-good PCM and recheck. Refer to the '98-'01 Accord Service Manual (see page 11-5). If prescribed voltage is now available, replace the original PCM. ■

NO – Repair open in the wire between the PCM (C 27) and the TP sensor. ■

19. Measure voltage between PCM connector terminals C18 and C28.

PCM CONNECTOR C (31P)

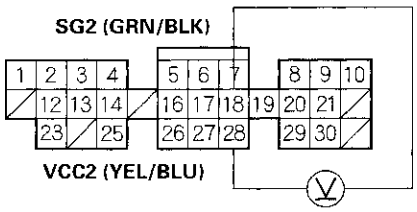

Wire side of female terminals

Is there approx. 5 V?

YES – Repair open in the wire between the PCM (C 28) and the TP sensor. ■

NO – Substitute a known-good PCM and recheck. Refer to the '98-'01 Accord Service Manual (see page 11-5). If voltage is normal, replace the original PCM. ■

DTC P0131: Primary HO2S(Sensor 1) Circuit Low Voltage

1. Do the PCM Reset Procedure.

2. Start the engine. Hold the engine at 3,000 rpm with no load (in Park or neutral) until the radiator fan comes on.

3. Check the primary HO2S (Sensor 1) output voltage with the scan tool during acceleration using wide open throttle.

   Does the voltage stay at 0.5 V or less?

   YES—Go to step 4.

   NO—Intermittent failure, system is OK at this time. Check for poor connections or loose wires at the primary HO2S (Sensor 1) and the PCM.■

4. Check the fuel pressure (see page 11-89).

   Is it normal?

   YES—Go to step 5.

   NO—Repair the fuel supply system.■

5. Turn the ignition switch OFF.

6. Disconnect the primary HO2S (Sensor 1) 4P connector.

7. Start the engine and let it idle.

8. Check the primary HO2S (Sensor 1) output voltage with the scan tool.

   Does it stay at 0.5 V or less?

   YES—Go to step 9.

   NO—Replace the primary HO2S (Sensor 1).■

9. Turn the ignition switch OFF.

10. Disconnect PCM connector C (31P).

11. Check for continuity between the primary HO2S (Sensor 1) 4P connector terminal No. 1 and body ground.

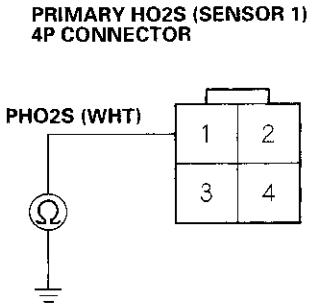

Wire side of female terminals

Is there continuity?

YES—Repair short in the wire between the PCM (C16) and the primary HO2S (Sensor 1).■

NO—Substitute a known-good PCM and recheck. Refer to the '98-01 Accord Service Manual (see page 11-5). If the symptom/indication goes away, replace the original PCM.■

DTC Troubleshooting (cont'd)

DTC P0132: Primary HO2S (Sensor 1) Circuit High Voltage

1. Do the PCM Reset Procedure.

2. Start the engine. Hold the engine at 3,000 rpm with no load (in Park or neutral) until the radiator fan comes on.

3. Check the primary HO2S (Sensor 1) output voltage with the scan tool.

   Does the voltage stay at 0.9 V or more?

   YES – Go to step 4.

   NO – Intermittent failure, system is OK at this time. Check for poor connections or loose wires at the primary HO2S (Sensor 1) and the PCM. ■

4. Turn the ignition switch OFF.

5. Disconnect the primary HO2S (Sensor 1) 4P connector.

6. Connect the primary HO2S (Sensor 1) 4P connector terminals No. 1 and No. 2 with a jumper wire.

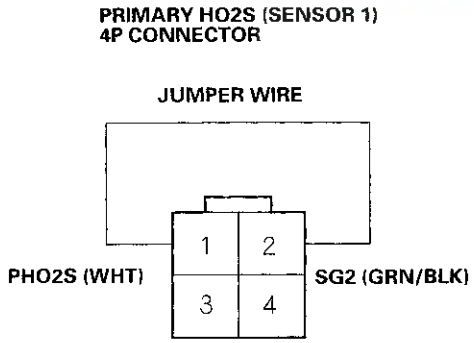

Wire side of female terminals

7. Turn the ignition switch ON (II).

8. Check the primary HO2S (Sensor 1) output voltage with the scan tool.

   Is there 0.9 V or more?

   YES – Go to step 9.

   NO – Replace the primary HO2S (Sensor 1). ■

9. Turn the ignition switch OFF.

10. Connect PCM connector terminals C16 and C18 with a jumper wire.

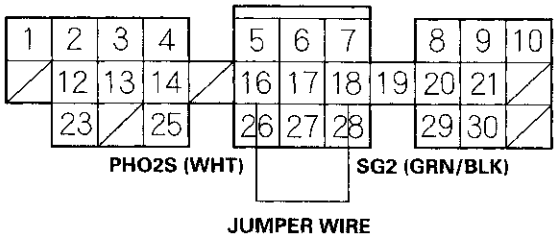

Wire side of female terminals

11. Turn the ignition switch ON (II).

12. Check the primary HO2S (Sensor 1) output voltage with the scan tool.

    Is there 0.9 V or more?

    YES – Substitute a known-good PCM and recheck. Refer to the '98-01 Accord Service Manual (see page 11-5). If the symptom/indication goes away, replace the original PCM. ■

    NO – Repair open in the wire between the PCM (C16 or C18) and the primary HO2S (Sensor 1). ■

DTC P0133: Primary HO2S (Sensor 1) Circuit Slow Response

NOTE: If DTC P0131, P0132 and/or P0135 are stored at the same time as DTC P0133, troubleshoot those DTCs first, then recheck for DTC P0133.

1. Do the PCM Reset Procedure.

2. Start the engine. Hold the engine at 3,000 rpm with no load (in Park or neutral) until the radiator fan comes on.

3. Test-drive under following conditions.

   - 55 mph (89 km/h) steady speed
   - Transmission in D4 position
   - Until readiness code or Temporary DTC P0133 comes on

4. Check for a Temporary DTC with the scan tool.

   Is Temporary DTC P0133 indicated?

   YES – Replace the primary HO2S (Sensor 1). ■

   NO – Intermittent failure, system is OK at this time. Check for poor connections or loose wires at C104 (located at the right side of the engine compartment), the primary HO2S (Sensor 1) and the PCM. ■

DTC Troubleshooting (cont'd)

DTC P0137: Secondary HO2S (Sensor 2) Circuit Low Voltage

1. Do the PCM Reset Procedure.

2. Start the engine. Hold the engine at 3,000 rpm with no load (in Park or neutral) until the radiator fan comes on.

3. Check the secondary HO2S (Sensor 2) output voltage at 3,000 rpm with the scan tool.

   Does the voltage stay at 0.3 V or less?

   YES – Go to step 4.

   NO – Intermittent failure, system is OK at this time. Check for poor connections or loose wires at C204 (located under the right side of the dash), C104 (located at the right side of the engine compartment), the secondary HO2S (Sensor 2) and the PCM. ■

4. Turn the ignition switch OFF.

5. Disconnect the secondary HO2S (Sensor 2) 4P connector.

6. Start the engine.

7. Check the secondary HO2S (Sensor 2) output voltage with the scan tool.

   Does the voltage stay at 0.3 V or less?

   YES – Go to step 8.

   NO – Replace the secondary HO2S (Sensor 2). ■

8. Turn the ignition switch OFF.

9. Disconnect PCM connector A (32P).

10. Check for continuity between the secondary HO2S (Sensor 2) 4P connector terminal No. 2 and body ground.

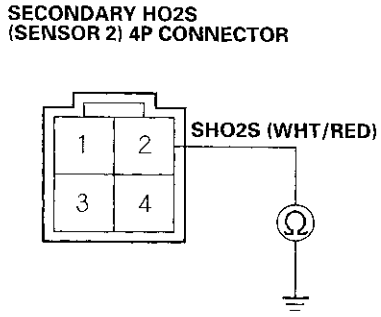

Terminal side of male terminals

Is there continuity?

YES – Repair short in the wire between the PCM (A23) and the secondary HO2S (Sensor 2). ■

NO – Substitute a known-good PCM and recheck. Refer to the '98-01 Accord Service Manual (see page 11-5). If the symptom/indication goes away, replace the original PCM.

DTC P0138: Secondary HO2S (Sensor 2) Circuit High Voltage

1. Do the PCM Reset Procedure.

2. Start the engine. Hold the engine at 3,000 rpm with no load (in Park or neutral) until the radiator fan comes on.

3. Check the secondary HO2S (Sensor 2) output voltage at 3,000 rpm with the scan tool.

   Does the voltage stay at 0.8 V or more?

   YES – Go to step 4.

   NO – Intermittent failure, system is OK at this time. Check for poor connections or loose wires at C204 (located under the right side of the dash), C104 (located at the right side of the engine compartment), the secondary HO2S (Sensor 2) and the PCM. ■

4. Turn the ignition switch OFF.

5. Disconnect the secondary HO2S (Sensor 2) 4P connector.

6. Connect the secondary HO2S (Sensor 2) 4P connector terminals No. 1 and No. 2 with a jumper wire.

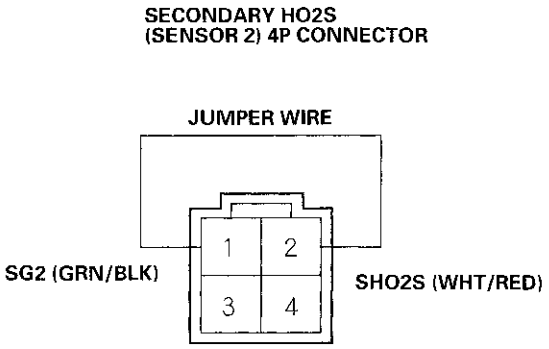

Terminal side of male terminals

7. Turn the ignition switch ON (II).

8. Check the secondary HO2S (Sensor 2) output voltage with the scan tool.

   Is there 0.8 V or more?

   YES – Go to step 9.

   NO – Replace the secondary HO2S (Sensor 2). ■

9. Turn the ignition switch OFF.

10. Connect PCM connector terminals A23 and C18 with a jumper wire.

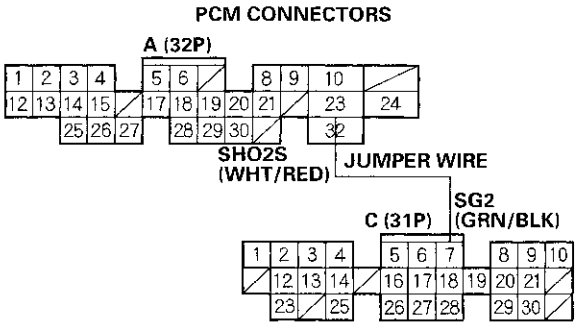

Wire side of female terminals

11. Turn the ignition switch ON (II).

12. Check the secondary HO2S (Sensor 2) output voltage with the scan tool.

    Is there 0.8 V or more?

    YES – Substitute a known-good PCM and recheck. Refer to the '98-01 Accord Service Manual (see page 11-5). If the symptom/indication goes away, replace the original PCM. ■

    NO – Repair short in the wire between the PCM (A23 or C18) and the secondary HO2S (Sensor 2). ■

DTC Troubleshooting (cont'd)

DTC P0139: Secondary HO2S (Sensor 2) Circuit Slow Response

1. Do the PCM Reset Procedure.

2. Start the engine. Hold the engine at 3,000 rpm with no load (in Park or neutral) until the radiator fan comes on.

3. Check the secondary HO2S (Sensor 2) output voltage at 3,000 rpm with the scan tool.

   Does the voltage stay within 0.3– 0.8 V for two minutes?

   YES – Replace the secondary HO2S (Sensor 2). ■

   NO – Intermittent failure, system is OK at this time. Check for poor connections or loose wires at C204 (located under the right side of the dash), C104 (located at the right side of the engine compartment), the secondary HO2S (Sensor 2) and the PCM. ■

DTC P0135: Primary HO2S (Sensor 1) Heater circuit Malfunction

DTC P0141: Secondary HO2S(Sensor 2) Heater circuit Malfunction

NOTE: Information marked with an asterisk (*) applies to DTC P0141.

1. Do the PCM Reset Procedure.

2. Start the engine.

   Is DTC P0135 or P0141 indicated?

   YES – Go to step 3.

   NO – Intermittent failure, system is OK at this time. Check for poor connections or loose wires at C204 (located under the right side of the dash), C104 (located at the right side of the engine compartment), the primary HO2S (Sensor 1), the secondary HO2S (Sensor 2) and the PCM. ■

3. Turn the ignition switch OFF.

4. Disconnect the HO2S (primary or secondary *) (Sensor 1 or Sensor 2 *) 4P connector.

5. At the HO2S side, measure resistance between the HO2S 4P connector terminals No. 3 and No. 4.

HO2S 4P CONNECTOR

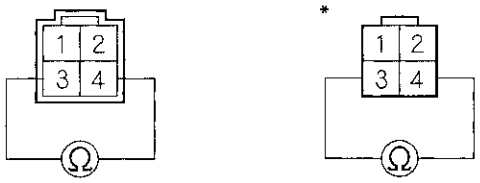

Terminal side of male terminals

Wire side of female terminals

Is there 5 – 15 Ω (10 – 40 Ω) ?*

YES – Go to step 6.

NO – Replace the primary HO2S (Sensor 1) or secondary HO2S (Sensor 2) * . ■

6. Check continuity between body ground and the HO2S 4P connector terminals No. 3 and No. 4 individually.

HO2S 4P CONNECTOR

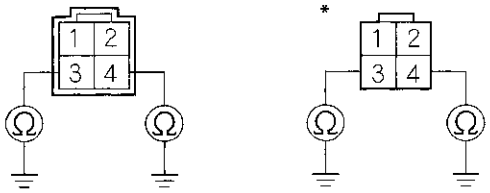

Terminal side of male terminals

Wire side of female terminals

Is there continuity?

YES – Replace the HO2S (primary or secondary *) (Sensor 1 or Sensor 2 *). ■

NO – Go to step 7.

7. Start the engine.

8. Measure voltage between the HO2S 4P connector terminal No. 4 and body ground.

PRIMARY/SECONDARY*HO2S (SENSOR 1/ SENSOR 2*) 4P CONNECTOR

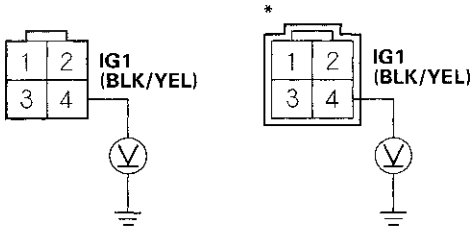

Wire side of female terminals

Terminal side of male terminals

Is there battery voltage?

YES – Go to step 9.

NO – Repair open in the wire between the No. 6 ECU (PCM) CRUISE CONTROL (15A) fuse and the HO2S. ■

(cont'd)

DTC Troubleshooting (cont'd)

9. Turn the ignition switch OFF.

10. Check for continuity between the HO2S 4P connector terminal No. 3 and body ground.

PRIMARY/SECONDARY*HO2S (SENSOR 1/ SENSOR 2*) 4P CONNECTOR

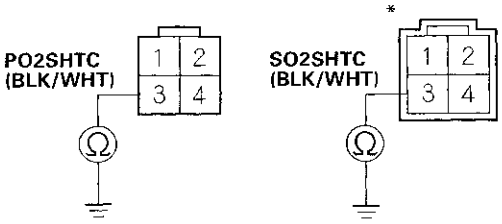

Wire side of female terminals

Terminal side of male terminals

Is there continuity?

YES—Go to step 11.

NO—Go to step 13.

11. Disconnect PCM connector C (31P) (PCM connector A, 32P) * .

12. Check for continuity between the HO2S 4P connector terminal No. 3 and body ground.

PRIMARY/SECONDARY*HO2S (SENSOR 1/ SENSOR 2*) 4P CONNECTOR

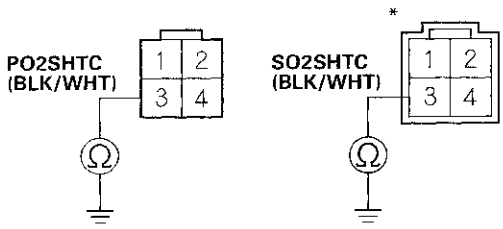

Wire side of female terminals

Terminal side of male terminals

Is there continuity?

YES—Repair short in the wire between the PCM (C1, A8 *) and HO2S (primary or secondary *) (Sensor 1, Sensor 2 *).■

NO—Substitute a known-good PCM and recheck. Refer to the '98-01 Accord Service Manual (see page 11-5). If the symptom/indication goes away, replace the original PCM.■

13. Reconnect the HO2S (primary or secondary *) (Sensor 1, Sensor 2 *) 4P connector.

14. Disconnect the PCM connector C (31P) (PCM connector A, 32P) * .

15. Turn the ignition switch ON (II).

16. Measure voltage between the PCM connector terminal C1 (A8) * and body ground.

PCM CONNECTORS

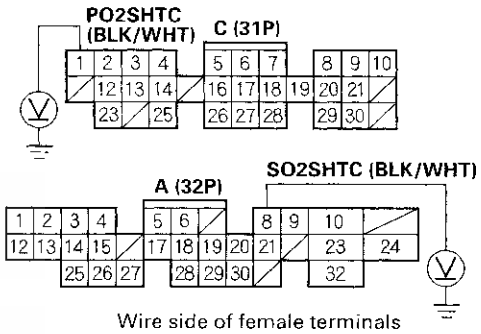

Wire side of female terminals

Is there battery voltage?

YES—Substitute a known-good PCM and recheck. Refer to the '98-01 Accord Service Manual (see page 11-5). If the symptom/indication goes away, replace the original PCM.■

NO—Repair open in the wire between the PCM (C1, A8 *) and the HO2S (primary or secondary *) (Sensor 1, Sensor 2 *).■

DTC P0300: Random misfire
and any combination of the following:

DTC P0301: No. 1 Cylinder misfire

DTC P0302: No. 2 Cylinder misfire

DTC P0303: No. 3 Cylinder misfire

DTC P0304: No. 4 Cylinder misfire

DTC P0305: No. 5 Cylinder misfire

DTC P0306: No. 6 Cylinder misfire

NOTE:
- If the misfiring is frequent enough to trigger detection of increased emissions during two consecutive driving cycles, the MIL will come on, and DTC P0300 (and some combination of P0301 through P0306) will be stored.
- If the misfiring is frequent enough to damage the catalyst, the MIL will blink whenever the misfiring occurs, and DTC P0300 (and some combination of P0301 through P0306) will be stored. When the misfiring stops, the MIL will remain on.

1. Troubleshoot the following DTCs first if any of them were stored along with the random misfire DTC(s):
   P0107, P0108, P1128, P1129: MAP Sensor
   P0131, P0132: Primary HO2S
   P0171, P0172: Fuel metering
   P0401, P1491, P1498: EGR System
   P0505: Idle control system
   P1259: VTEC System
   P1361, P1362, P1366, P1367: TDC 1/TDC 2 Sensor
   P1519: IAC Valve

2. Test-drive the vehicle to verify the symptom.

3. Find the symptom in the chart below, and do the related procedures in the sequence listed, until you find the cause.

Symptom	Procedure(s)	Also check for:
Random misfire only at low RPM and under load	1. Check fuel pressure (see page 11-89). 2. Inspect the distributor ignition housing.*	• Low compression. • Low quality fuel.
Random misfire only during acceleration	1. Inspect and test ignition wires (see page 4-22).* 2. Inspect the distributor ignition housing.* 3. Check fuel pressure (see page 11-89). 4. Test the ignition coil for '98-99 models (see page 4-22), or for '00-01 models (see page 4-23). 5. Test the ignition control module (see page 4-19).*	Malfunction in the VTEC system (see page 6-9).
Random misfire at high RPM and under load, or under random conditions	1. Check fuel pressure (see page 11-89). 2. Inspect and test ignition wires (see page 4-22).* 3. Inspect the distributor ignition housing.* 4. Test the ignition coil for '98-99 models (see page 4-22), or for '00-01 models (see page 4-23). 5. Test the ignition control module (see page 4-21).*	Correct valve clearance (see page 6-13).

*: '98-99 models

DTC Troubleshooting (cont'd)

DTC P0301: No. 1 Cylinder Misfire ('98-99 models)

DTC P0302: No. 2 Cylinder Misfire ('98-99 models)

DTC P0303: No. 3 Cylinder Misfire ('98-99 models)

DTC P0304: No. 4 Cylinder Misfire ('98-99 models)

DTC P0305: No. 5 Cylinder Misfire ('98-99 models)

DTC P0306: No. 6 Cylinder Misfire ('98-99 models)

1. Remove the intake manifold cover (see step 4 on page 6-31).
2. After checking and recording the freeze data, reset the PCM. If there is no freeze data of misfiring, just clear the DTC.
3. Start the engine, listen for a clicking sound at the injector in the problem cylinder.

   Does it click?

   YES – Go to step 4.

   NO – Go to step 19.
4. Turn the ignition switch OFF.
5. Inspect the ignition wire on the problem cylinder (see page 4-22).

   Is it OK?

   YES – Go to step 6.

   NO – Replace the faulty ignition wire. ■
6. Check the distributor cap for cracks, wear, damage, and fauling.

   Is it OK?

   YES – Go to step 7.

   NO – Clean or replace the distributor cap. ■
7. Exchange the spark plug from the problem cylinder with one from another cylinder.
8. Test-drive the vehicle several times in the range of the freeze data or under various conditions if there was no freeze data.
9. Check the DTC and the Temporary DTC with the scan tool.

   Is DTC P0301, P0302, P0303, P0304, P0305 or P0306, or Temporary DTC P1399 indicated?

   YES – Go to step 10.

   NO – Intermittent misfire due to spark plug fouling, etc. (no misfire at this time). ■
10. Determine which cylinder had the misfire.

    Does the misfire occur in the other cylinder whose spark plug was exchanged?

    YES – Replace the faulty spark plug. ■

    NO – Go to step 11.
11. Turn the ignition switch OFF.
12. Exchange the injector from the problem cylinder with one from the another cylinder.
13. Let the engine idle for 2 minutes.
14. Test-drive the vehicle several times in the range of the freeze data or under various conditions if there was no freeze data.
15. Check the DTC and the Temporary DTC with the scan tool.

    Is DTC P0301, P0302, P0303, P0304, P0305 or P0306, or Temporary DTC P1399 indicated?

    YES – Go to step 16.

    NO – Intermittent misfire due to bad contact in the injector connector (no misfire at this time). ■

16. Determine which cylinder had the misfire.

Does the misfire occur in the other cylinder whose injector was exchanged?

YES — Replace the faulty injector (see page 11-80). ■

NO — Go to step 17.

17. Turn the ignition switch OFF.

18. Check the engine compression.

Is the engine compression OK?

YES — Substitute a known-good PCM and recheck. Refer to the '98-01 Accord Service Manual (see page 11-5). If the symptom/indication goes away, replace the original PCM. ■

NO — Repair the engine. ■

19. Turn the ignition switch OFF.

20. Disconnect PCM connector B (25P).

21. Turn the ignition switch ON (II).

22. Measure voltage between body ground and the PCM connector terminal (see table).

PCM CONNECTOR B (25P)

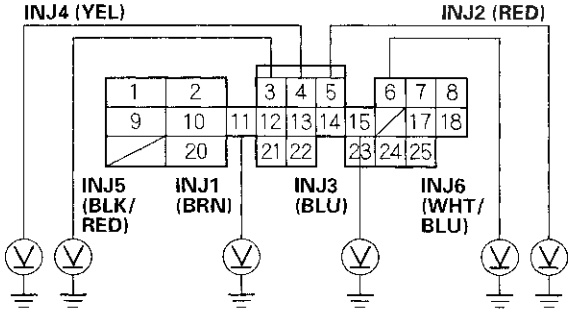

Wire side of female terminals

PROBLEM CYLINDER	DTC	PCM TERMINAL	WIRE COLOR
No. 1	P0301	B11	BRN
No. 2	P0302	B5	RED
No. 3	P0303	B15	BLU
No. 4	P0304	B4	YEL
No. 5	P0305	B3	BLK/RED
No. 6	P0306	B6	WHT/BLU

Is there battery voltage?

YES — Go to step 23.

NO — Go to step 31.

23. Turn the ignition switch OFF.

24. Disconnect the injector 2P connector on the problem cylinder.

25. Measure resistance between the injector 2P connector terminals No. 1 and No. 2.

INJECTOR 2P CONNECTOR

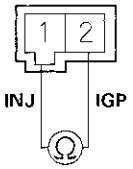

Terminal side of male terminals

Is there 10 Ω – 13 Ω ?

YES — Go to step 26.

NO — Replace the injector (see page 11-80). ■

26. Exchange the injector from the problem cylinder with one from another cylinder.

27. Let the engine idle for 2 minutes.

28. Test-drive the vehicle several times in the range of the freeze data or under various conditions if there was no freeze data.

29. Check the DTC and the Temporary DTC with the scan tool.

Is DTC P0301, P0302, P0303, P0304, P0305 or P0306, or Temporary DTC P1399 indicated?

YES — Go to step 30.

NO — Intermittent misfire due to injector fouling, etc. ■

(cont'd)

DTC Troubleshooting (cont'd)

30. Determine which cylinder had the misfire.

    Does the misfire occur in the other cylinder whose injector was exchanged?

    YES - Replace the faulty injector.■

    NO - Substitute a known-good PCM and recheck Refer to the '98-01 Accord Service Manual (see page 11-5). If the symptom/indication goes away, replace the original PCM.■

31. Turn the ignition switch OFF.

32. Disconnect the injector 2P connector on the problem cylinder.

33. Turn the ignition switch ON (II).

34. Measure voltage between the injector 2P connector terminals No. 2 and body ground.

INJECTOR 2P CONNECTOR

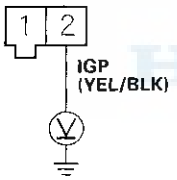

Wire side of female terminals

Is there battery voltage?

YES - Go to step 35.

NO - Repair open in the wire between the injector and the PGM-FI main relay.■

35. Turn the ignition switch OFF.

36. Check for continuity between body ground and the PCM connector terminal (see table).

PCM CONNECTOR B (25P)

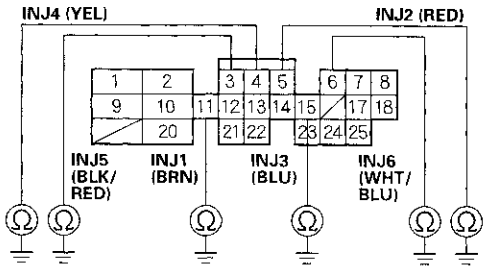

Wire side of female terminals

PROBLEM CYLINDER	DTC	PCM TERMINAL	WIRE COLOR
No. 1	P0301	B11	BRN
No. 2	P0302	B5	RED
No. 3	P0303	B15	BLU
No. 4	P0304	B4	YEL
No. 5	P0305	B3	BLK/RED
No. 6	P0306	B6	WHT/BLU

Is there continuity?

YES - Repair short in the wire between the PCM and the injector.■

NO - Go to step 37.

37. Connect the injector 2P connector terminal No. 1 to body ground with a jumper wire (see table).

INJECTOR 2P CONNECTOR

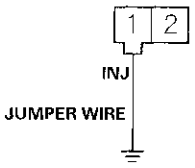

Wire side of female terminals

PROBLEM CYLINDER	DTC	WIRE COLOR
No. 1	P0301	BRN
No. 2	P0302	RED
No. 3	P0303	BLU
No. 4	P0304	YEL
No. 5	P0305	BLK/RED
No. 6	P0306	WHT/BLU

38. Check for continuity between body ground and the PCM connector terminals (see table).

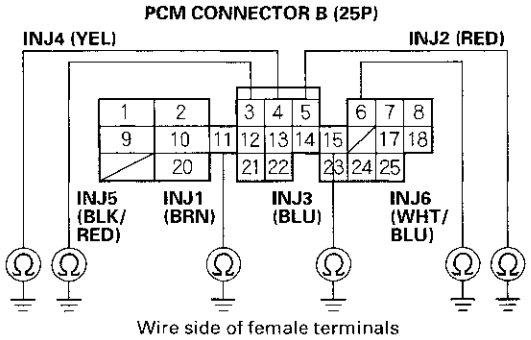

PROBLEM CYLINDER	DTC	PCM TERMINAL	WIRE COLOR
No. 1	P0301	B11	BRN
No. 2	P0302	B5	RED
No. 3	P0303	B15	BLU
No. 4	P0304	B4	YEL
No. 5	P0305	B3	BLK/RED
No. 6	P0306	B6	WHT/BLU

Is there continuity?

YES—Replace the injector (see page 11-80), then recheck. ■

NO—Repair open in the wire between the PCM and the injector. ■

DTC Troubleshooting (cont'd)

DTC P0301: No. 1 Cylinder Misfire ('00-01 models)

DTC P0302: No. 2 Cylinder Misfire ('00-01 models)

DTC P0303: No. 3 Cylinder Misfire ('00-01 models)

DTC P0304: No. 4 Cylinder Misfire ('00-01 models)

DTC P0305: No. 5 Cylinder Misfire ('00-01 models)

DTC P0306: No. 6 Cylinder Misfire ('00-01 models)

1. Remove the intake manifold cover and the ignition coil cover (see step 4 on page 6-31).

2. After checking and recording the freeze data, reset the PCM. If there is no freeze data of misfiring, just clear the DTC.

3. Start the engine, listen for a clicking sound at the injector in the problem cylinder.

   Does it click?

   YES – Go to step 4.

   NO – Go to step 31.

4. Turn the ignition switch OFF.

5. Exchange the ignition coil from the problem cylinder with one from another cylinder.

6. Test-drive the vehicle several times in the range of the freeze data or under various conditions if there was no freeze data.

7. Check the DTC and the Temporary DTC with the scan tool.

   Is DTC P0301, P0302, P0303, P0304, P0305 or P0306, or Temporary DTC P1399 indicated?

   YES – Go to step 8.

   NO – Intermittent misfire due to ignition coil fouling, etc. (no misfire at this time). ■

8. Determine which cylinder had the misfire.

   Does the misfire occur in the other cylinder whose ignition coil was exchanged?

   YES – Replace the faulty ignition coil. ■

   NO – Go to step 9.

9. Turn the ignition switch OFF.

10. Exchange the spark plug from the problem cylinder with one from another cylinder.

11. Test-drive the vehicle several times in the range of the freeze data or under various conditions if there was no freeze data.

12. Check the DTC and the Temporary DTC with the scan tool.

    Is DTC P0301, P0302, P0303, P0304, P0305 or P0306, or Temporary DTC P1399 indicated?

    YES – Go to step 13.

    NO – Intermittent misfire due to spark plug fouling, etc. (no misfire at this time). ■

13. Determine which cylinder had the misfire.

    Does the misfire occur in the other cylinder whose spark plug was exchanged?

    YES – Replace the faulty spark plug. ■

    NO – Go to step 14.

14. Turn the ignition switch OFF.

15. Exchange the injector from the problem cylinder with one from the another cylinder.

16. Let the engine idle for 2 minutes.

17. Test-drive the vehicle several times in the range of the freeze data or under various conditions if there was no freeze data.

18. Check the DTC and the Temporary DTC with the scan tool.

Is DTC P0301, P0302, P0303, P0304, P0305 or P0306, or Temporary DTC P1399 indicated?

YES — Go to step 19.

NO — Intermittent misfire due to bad contact in the injector connector (no misfire at this time).■

19. Determine which cylinder had the misfire.

Does the misfire occur in the other cylinder whose injector was exchanged?

YES — Replace the faulty injector (see page 11-82).■

NO — Go to step 20.

20. Turn the ignition switch OFF.

21. Disconnect the ignition coil 3P connector from the problem cylinder.

22. Turn the ignition switch ON (II).

23. Measure voltage between the ignition coil 3P connector terminal No. 3 and body ground.

IGNITION COIL 3P CONNECTOR

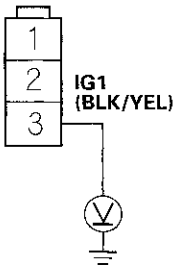

Wire side of female terminals

Is there battery voltage?

YES — Go to step 24.

NO — Repair open or short in the wire between the No. 11 COIL (15 A) fuse and the ignition coil.■

24. Turn the ignition switch OFF.

25. Check for continuity between the ignition coil 3P connector terminal No. 2 and body ground.

IGNITION COIL 3P CONNECTOR

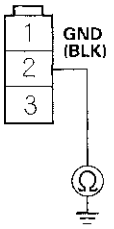

Wire side of female terminals

Is there continuity?

YES — Go to step 26.

NO — Repair open in the wire between the ignition coil and G101 (or G102).■

26. Disconnect PCM connector C (31P).

27. Check for continuity between body ground and the PCM connector terminal (see table).

PCM CONNECTOR C (31P)

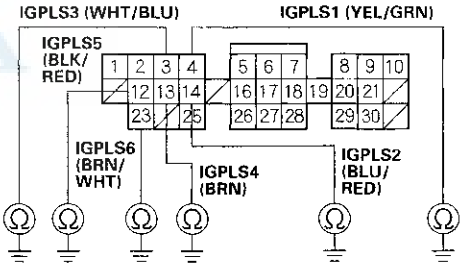

Wire side of female terminals

PROBLEM CYLINDER	DTC	PCM TERMINAL	WIRE COLOR
No. 1	P0301	C4	YEL/GRN
No. 2	P0302	C14	BLU/RED
No. 3	P0303	C3	WHT/BLU
No. 4	P0304	C13	BRN
No. 5	P0305	C12	BLK/RED
No. 6	P0306	C23	BRN/WHT

Is there continuity?

YES — Repair short in the wire between the PCM and the ignition coil.■

NO — Go to step 28.

(cont'd)

DTC Troubleshooting (cont'd)

28. Connect the ignition coil 3P connector terminal No. 1 and body ground with a jumper wire (see table).

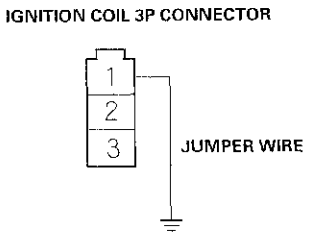

Wire side of female terminals

PROBLEM CYLINDER	DTC	WIRE COLOR
No. 1	P0301	YEL/GRN
No. 2	P0302	BLU/RED
No. 3	P0303	WHT/BLU
No. 4	P0304	BRN
No. 5	P0305	BLK/RED
No. 6	P0306	BRN/WHT

29. Check for continuity between body ground and the PCM connector terminal (see table).

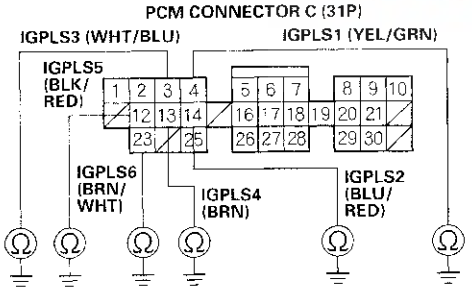

Wire side of female terminals

PROBLEM CYLINDER	DTC	PCM TERMINAL	WIRE COLOR
No. 1	P0301	C4	YEL/GRN
No. 2	P0302	C14	BLU/RED
No. 3	P0303	C3	WHT/BLU
No. 4	P0304	C13	BRN
No. 5	P0305	C12	BLK/RED
No. 6	P0306	C23	BRN/WHT

Is there continuity?

YES Go to step 30.

NO Repair open in the wire between the PCM and the ignition coil.■

30. Check the engine compression.

Is the engine compression OK?

YES – Substitute a known-good PCM and recheck. Refer to the '98-01 Accord Service Manual (see page 11-5). If the symptom/indication goes away, replace the original PCM.■

NO – Repair the engine.■

31. Turn the ignition switch OFF.

32. Disconnect PCM connector B (25P).

33. Turn the ignition switch ON (II).

34. Measure voltage between body ground and the PCM connector terminal (see table).

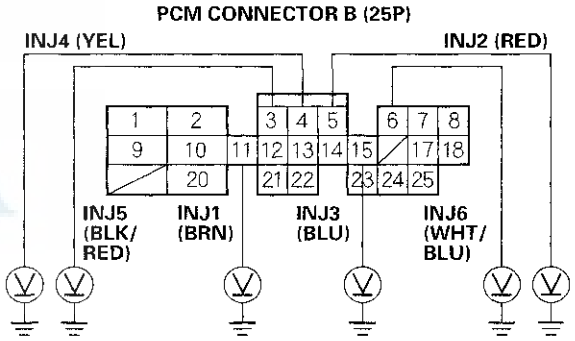

Wire side of female terminals

PROBLEM CYLINDER	DTC	PCM TERMINAL	WIRE COLOR
No. 1	P0301	B11	BRN
No. 2	P0302	B5	RED
No. 3	P0303	B15	BLU
No. 4	P0304	B4	YEL
No. 5	P0305	B3	BLK/RED
No. 6	P0306	B6	WHT/BLU

Is there battery voltage?

YES Go to step 35.

NO Go to step 43.

35. Turn the ignition switch OFF.

36. Disconnect the injector 2P connector on the problem cylinder.

37. Measure resistance between the injector 2P connector terminals No. 1 and No. 2.

INJECTOR 2P CONNECTOR

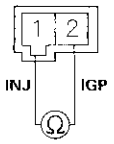

Terminal side of male terminals

Is there 10 Ω – 13 Ω ?

YES – Go to step 38.
NO – Replace the injector (see page 11-82). ■

38. Exchange the injector from the problem cylinder with one from another cylinder.

39. Let the engine idle for 2 minutes.

40. Test-drive the vehicle several times in the range of the freeze data or under various conditions if there was no freeze data.

41. Check the DTC and the Temporary DTC with the scan tool.

Is DTC P0301, P0302, P0303, P0304, P0305 or P0306, or Temporary DTC P1399 indicated?

YES – Go to step 42.
NO – Intermittent misfire due to injector fouling, etc. ■

42. Determine which cylinder had the misfire.

Does the misfire occur in the other cylinder whose injector was exchanged?

YES – Replace the faulty injector. ■
NO – Substitute a known-good PCM and recheck Refer to the '98-01 Accord Service Manual (see page 11-5). If the symptom/indication goes away, replace the original PCM. ■

43. Turn the ignition switch OFF.

44. Disconnect the injector 2P connector on the problem cylinder.

45. Turn the ignition switch ON (II).

46. Measure voltage between the injector 2P connector terminals No. 1 and body ground.

INJECTOR 2P CONNECTOR

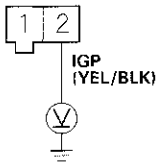

Wire side of female terminals

Is there battery voltage?

YES – Go to step 47.

NO – Repair open in the wire between the injector and the PGM-FI main relay. ■

47. Turn the ignition switch OFF.

48. Check for continuity between body ground and the PCM connector terminal (see table).

PCM CONNECTOR B (25P)

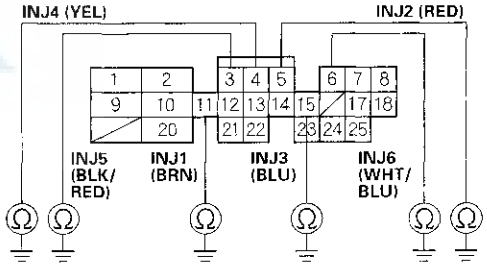

Wire side of female terminals

PROBLEM CYLINDER	DTC	PCM TERMINAL	WIRE COLOR
No. 1	P0301	B11	BRN
No. 2	P0302	B5	RED
No. 3	P0303	B15	BLU
No. 4	P0304	B4	YEL
No. 5	P0305	B3	BLK/RED
No. 6	P0306	B6	WHT/BLU

Is there continuity?

YES – Repair short in the wire between the PCM and the injector. ■

NO – Go to step 49.

(cont'd)

DTC Troubleshooting (cont'd)

49. Connect the injector 2P connector terminal No. 1 to body ground with a jumper wire (see table).

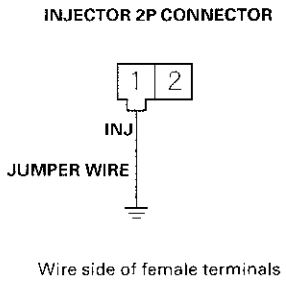

PROBLEM CYLINDER	DTC	WIRE COLOR
No. 1	P0301	BRN
No. 2	P0302	RED
No. 3	P0303	BLU
No. 4	P0304	YEL
No. 5	P0305	BLK/RED
No. 6	P0306	WHT/BLU

50. Check for continuity between body ground and the PCM connector terminals (see table).

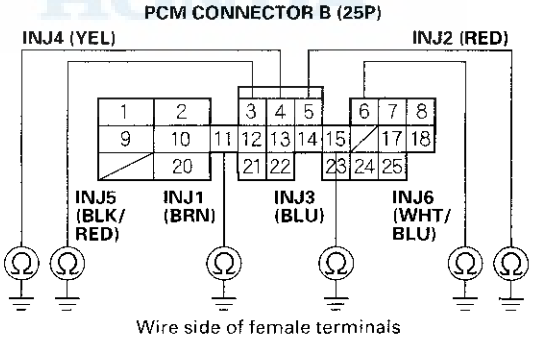

PROBLEM CYLINDER	DTC	PCM TERMINAL	WIRE COLOR
No. 1	P0301	B11	BRN
No. 2	P0302	B5	RED
No. 3	P0303	B15	BLU
No. 4	P0304	B4	YEL
No. 5	P0305	B3	BLK/RED
No. 6	P0306	B6	WHT/BLU

Is there continuity?

YES – Replace the injector (see page 11-82). then recheck. ■

NO – Repair open in the wire between the PCM and the injector. ■

DTC P0335: CKP Sensor No Signal

DTC P0336: CKP Sensor intermittent interruption

1. Do the PCM Reset Procedure.

2. Start the engine.

   Is DTC P0335 and/or P0336 indicated?

   YES -- Go to step 3.

   NO -- Intermittent failure, system is OK at this time. Check for poor connections or loose wires at the CKP sensor and the PCM. ■

3. Turn the ignition switch OFF.

4. Disconnect the CKP sensor 2P connector.

5. Measure resistance between the CKP sensor 2P connector terminals No. 1 and No. 2.

CKP SENSOR 2P CONNECTOR

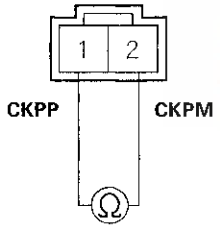

Terminal side of male terminals

Is there 1,850 2,450 Ω ?

YES – Go to step 6.

NO – Replace the CKP sensor (see page 6-56). ■

6. Check for continuity between body ground and CKP sensor 2P connector terminals No. 1 and No. 2 individually.

CKP SENSOR 2P CONNECTOR

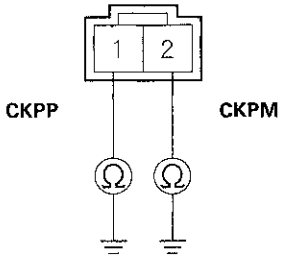

Terminal side of male terminals

Is there continuity?

YES – Replace the CKP sensor (see page 6-56). ■

NO – Go to step 7.

7. Reconnect the CKP sensor 2P connector.

8. Disconnect PCM connector C (31P).

9. Measure resistance between PCM connector terminals C8 and C9.

PCM CONNECTOR C (31P)

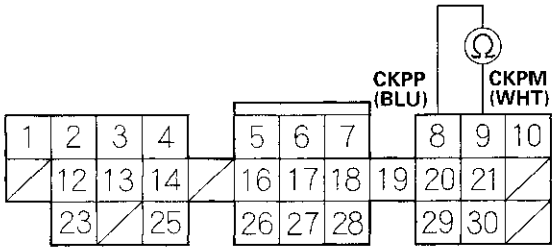

Wire side of female terminals

Is there 1,850– 2,450 Ω ?

YES – Go to step 10.

NO – Repair open in the wire between the PCM (C8, C9) and the CKP sensor. ■

(cont'd)

DTC Troubleshooting (cont'd)

10. Check for continuity between body ground and PCM connector terminal C8.

PCM CONNECTOR C (31P)

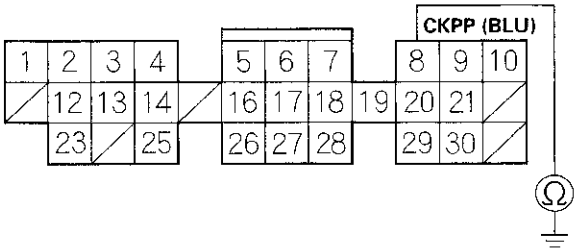

Wire side of female terminals

Is there continuity?

YES—Repair short in the wire between the PCM (C 8) and the CKP sensor.■

NO—Substitute a known-good PCM and recheck. Refer to the '98-01 Accord Service Manual (see page 11-5). If the symptom/indication goes away, replace the original PCM.■

DTC P1121: TP Sensor Lower Than Expected

1. Turn the ignition switch ON (II).
2. Check the throttle position with the scan tool.

   Is 13.7 % or higher indicated when the throttle is fully opened?

   YES – Intermittent failure, system is OK at this time. ■

   NO – Replace the TP sensor. ■

DTC P1122: TP Sensor Higher Than Expected

1. Turn the ignition switch ON (II).
2. Check the throttle position with the scan tool.

   Is 16.9 % or less indicated when the throttle is fully closed?

   YES – Intermittent failure, system is OK at this time. ■

   NO – Replace the TP sensor. ■

DTC Troubleshooting (cont'd)

DTC P1361: TDC1 Sensor Intermittent Interruption

DTC P1362: TDC1 Sensor No Signal

DTC P1366: TDC2 Sensor Intermittent Interruption

DTC P1367: TDC2 Sensor No Signal

1. Do the PCM Reset Procedure.
2. Start the engine.

   Is DTC P1361, P1362, P1366 or P1367 indicated?

   YES—Go to step 3.

   NO—Intermittent failure, system is OK at this time. Check for poor connections or loose wires at the TDC 1/TDC 2 sensor and the PCM.■

3. Turn the ignition switch OFF.
4. Disconnect the TDC 1/TDC2 sensor 4P connector.
5. Measure resistance between the terminals of the indicated sensor (see table).

TDC1/TDC2 SENSOR 4P CONNECTOR

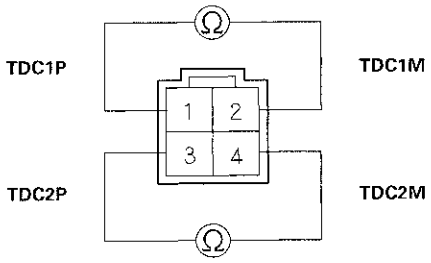

Terminal side of male terminals

SENSOR	DTC	SENSOR TERMINAL	PCM TERMINAL	WIRE COLOR
TDC1	P1361	1	C20	GRN
	P1362	2	C21	RED
TDC2	P1366	3	C29	YEL
	P1367	4	C30	BLK

Is there 1,850—2,450 Ω ?

YES—Go to step 6.

NO—Replace the TDC 1/TDC 2 sensor (see page 6-55).■

6. Check for continuity to body ground on both terminals of the indicated sensor individually.

TDC1/TDC2 SENSOR 4P CONNECTOR

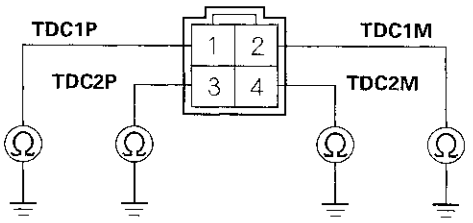

Terminal side of male terminals

Is there continuity?

YES—Replace the TDC 1/TDC 2 sensor (see page 6-55).■

NO—Go to step 7.

7. Reconnect the TDC 1/TDC 2 sensor 4P connector.
8. Disconnect PCM connector C (31P).
9. Measure resistance between the terminals of the indicated sensor on the PCM connector (see table).

PCM CONNECTOR C (31P)

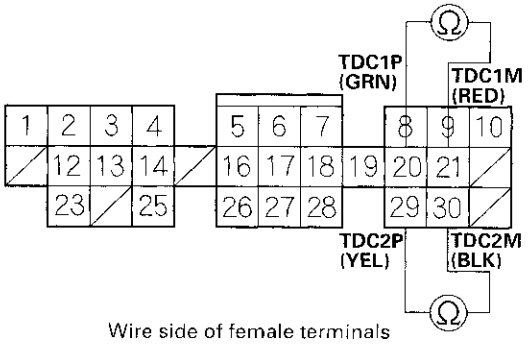

Wire side of female terminals

Is there 1,850—2,450 Ω ?

YES—Go to step 10.

NO—Repair open in the indicated sensor wires (see table).■

10. Check for continuity between body ground and PCM connector terminals C20 and/or C29 individually.

PCM CONNECTOR C (31P)

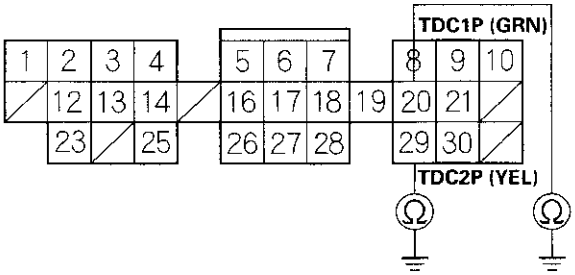

Wire side of female terminals

Is there continuity?

YES – Repair short in the indicated sensor wires (see table). ■

NO – Substitute a known-good PCM and recheck. Refer to the '98-01 Accord Service Manual (see page 11-5). If the symptom/indication goes away, replace the original PCM. ■

DTC Troubleshooting (cont'd)

DTC P1676: FPTDR Signal Line Malfunction

1. Do the PCM Reset Procedure.
2. Start the engine and wait 10 seconds.

   Is DTC P1676 indicated?

   YES – Go to step 3.

   NO – Intermittent failure system is OK at this time. Check for poor connections or loose wires at the ABS/TCS control unit and at the PCM. ■

3. Turn the ignition switch OFF.
4. Disconnect PCM connector A (32P) and the ABS/TCS control unit 16P connector.
5. Check for continuity between body gound and PCM connector terminal A22.

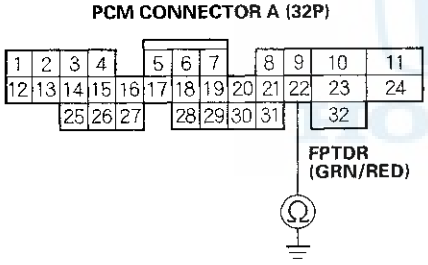

Wire side of female terminals

Is there continuity?

YES – Repair short in the wire between the ABS/TCS control unit and the PCM (A22). ■

NO – Go to step 6.

6. Check for continuity between the ABS/TCS control unit 16P connector terminal No. 1 and PCM connector terminal A22.

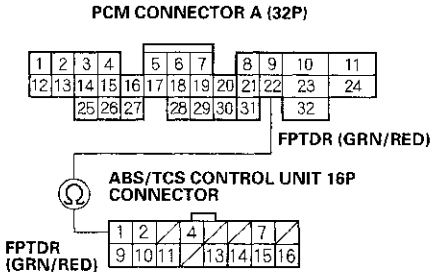

Wire side of female terminals

Is there continuity?

YES – Go to step 7.

NO – Repair open in the wire between the ABS/TCS control unit and the PCM (A22). ■

7. Reconnect PCM connector E (32).
8. Connect PCM connector terminals A22 and C28 with a jumper wire.

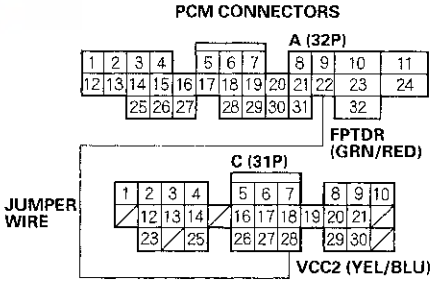

Wire side of female terminals

9. Do the PCM Reset Procedure.
10. Start the engine and wait 60 seconds.

    Is DTC P1678 indicated?

    YES – Substitute a known-good ABS/TCS control unit and recheck. If the symptom/indication goes away, replace the original ABS/TCS control unit. ■

    NO – Substitute a known-good PCM and recheck Refer to the '98-01 Accord Service Manual (see page 11-5). If the symptom/indication goes away, replace the original PCM. ■

DTC P1678: FPTDR Signal Line Malfunction

1. Do the PCM Reset Procedure.

2. Start the engine and wait 60 seconds.

   Is DTC P1678 indicated?

   YES—Substitute a known-good ABS/TCS control unit and recheck. If the symptom/indication goes away, replace the original ABS/TCS control unit. ■

   NO—Intermittent failure, system is OK at this time. Check for poor connections or loose wires at the ABS/TCS control unit and at the PCM.

Injector Replacement

'98-99 models:

1. Relieve fuel pressure (see page 11-88).
2. Remove the intake manifold covers and the intake manifold.
3. Disconnect the connectors from the injectors (A).

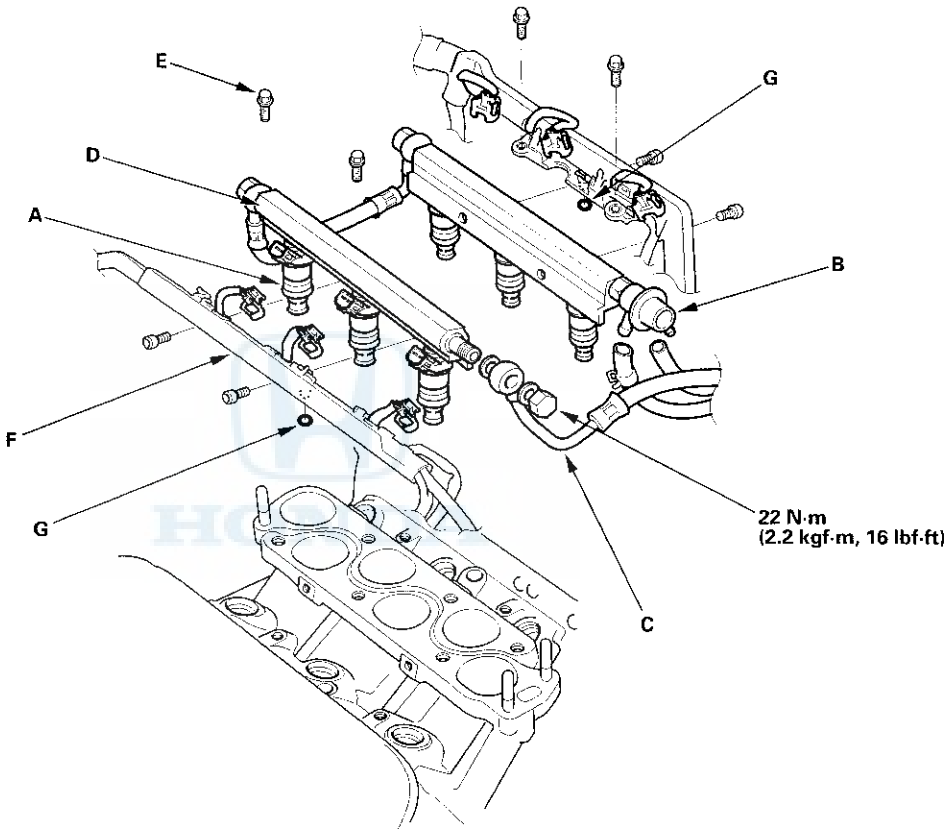

4. Disconnect the vacuum hose and fuel return hose from the fuel pressure regulator (B). Place a rag or shop towel over the hoses before disconnecting them.
5. Disconnect the fuel hose (C) from the fuel rail (D).
6. Remove the retainer bolts (E) from the fuel rails and harness holders (F), then replace the O-rings (G).
7. Disconnect the fuel rails.
8. Remove the injectors from the fuel rails.

9. Slide new cushion rings (A) onto the injectors (B).

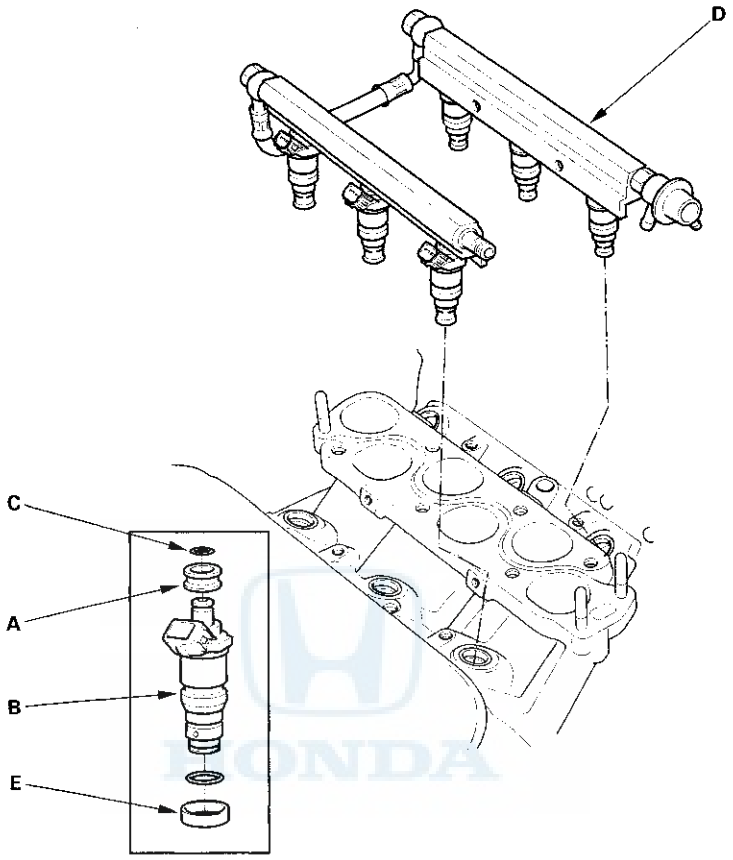

10. Coat new O-rings (C) with clean engine oil, and put them on the injectors.

11. Insert the injectors into the fuel rails (D) first.

12. Coat new seal rings (E) with clean engine oil, and press them into the intake manifold.

13. To prevent damage to the O-rings, install the injectors in the fuel rails first, then install them in the intake manifold.

14. Install and tighten the retainer bolts.

15. Connect the fuel hose to the fuel rail with new washers.

16. Connect the vacuum hose and fuel return hose to the fuel pressure regulator.

17. Install the connectors on the injectors and harness holders.

18. Install the intake manifold and the intake manifold cover.

19. Turn the ignition switch ON (II), but do not operate the starter. After the fuel pump runs for approximately 2 seconds, the fuel pressure in the fuel line rises. Repeat this 2 or 3 times, then check for fuel leakage.

Injector Replacement (cont'd)

'00-01 models:

1. Relieve fuel pressure (see page 11-88).
2. Remove the intake manifold covers and the intake manifold.
3. Disconnect the connectors from the injectors (A).

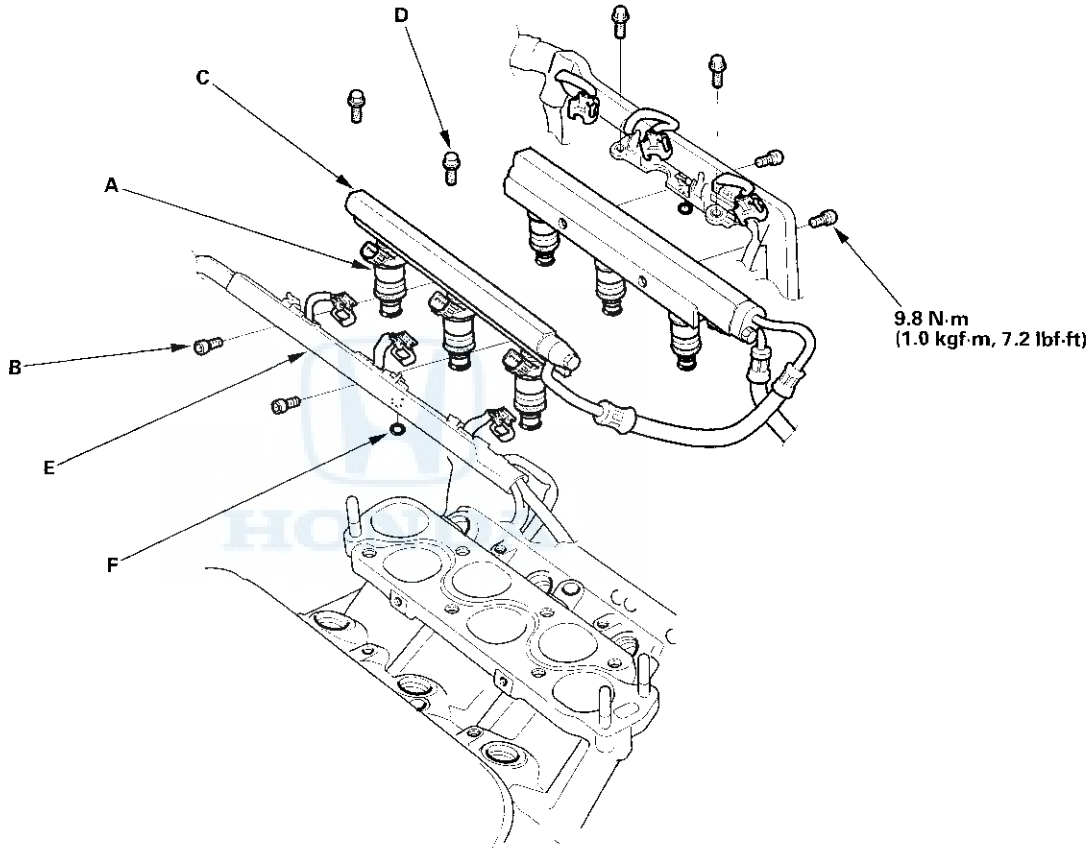

4. Remove the retainer bolts (D) from the fuel rails (C) and harness holders (E), then replace the O-rings (F).
5. Disconnect the fuel rails.
6. Remove the injectors from the fuel rails.

7. Slide new cushion rings (A) onto the injectors (B).

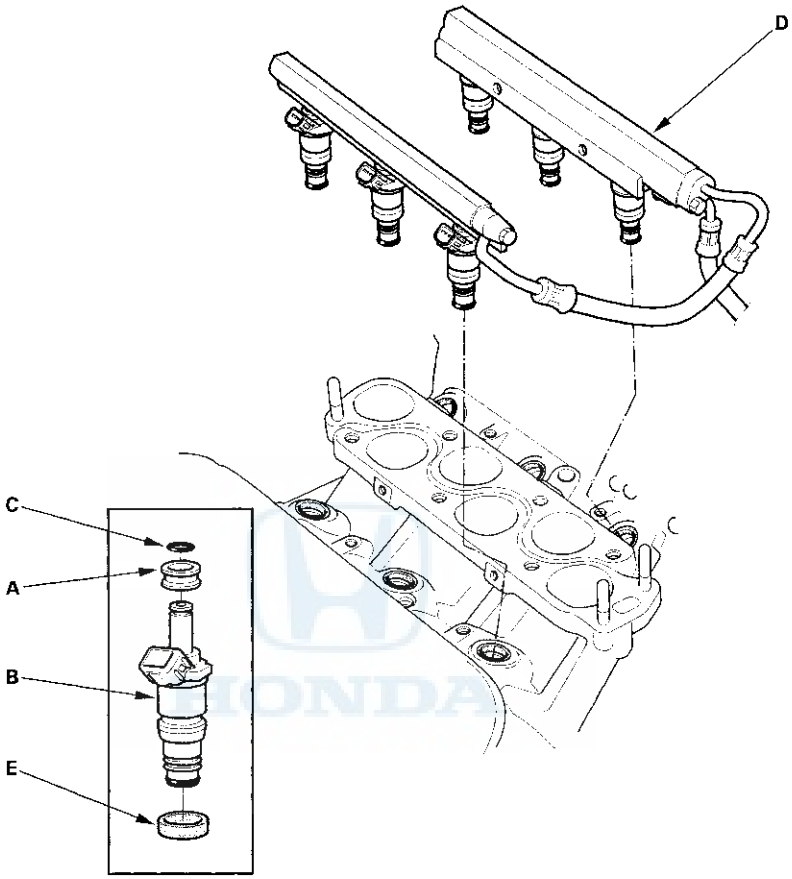

8. Coat new O-rings (C) with clean engine oil, and put them on the injectors.

9. Insert the injectors into the fuel rails (D) first.

10. Coat new seal rings (E) with clean engine oil, and press them into the intake manifold.

11. To prevent damage to the O-rings, install the fuel injectors in the fuel rails first, then install them in the intake manifold.

12. Install bolts.

13. Install the connectors on the injectors.

14. Install the intake manifold and the intake manifold cover.

15. Turn the ignition switch ON (II), but do not operate the starter. After the fuel pump runs for approximately 2 seconds, the fuel pressure in the fuel line rises. Repeat this 2 or 3 times, then check for fuel leakage.

Primary HO2S Replacement

Special Tools Required
Commercially available O2 sensor wrench,
Snap-on YA8875 or SP Tools 93750 or equivalent

1. Disconnect the primary HO2S 4P connector (A), then remove the primary HO2S (B).

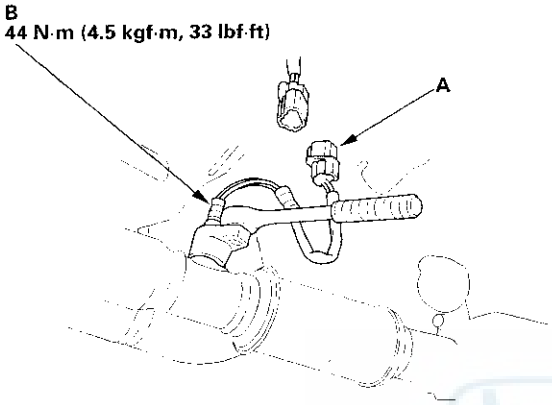

2. Install the primary HO2S in reverse order of removal.

Secondary HO2S Replacement

Special Tools Required
Commercially available O2 sensor wrench,
Snap-on YA8875 or SP Tools 93750 or equivalent

1. Disconnect the secondary HO2S 4P connector (A), then remove the secondary HO2S (B).

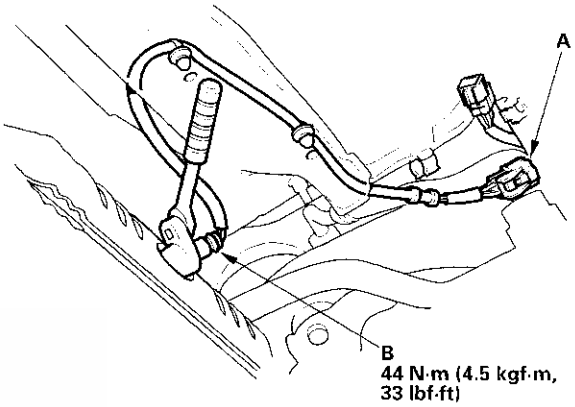

2. Install the secondary HO2S in the reverse order of removal.

Component Location Index

NOTE: The illustration shows '00-01 models.

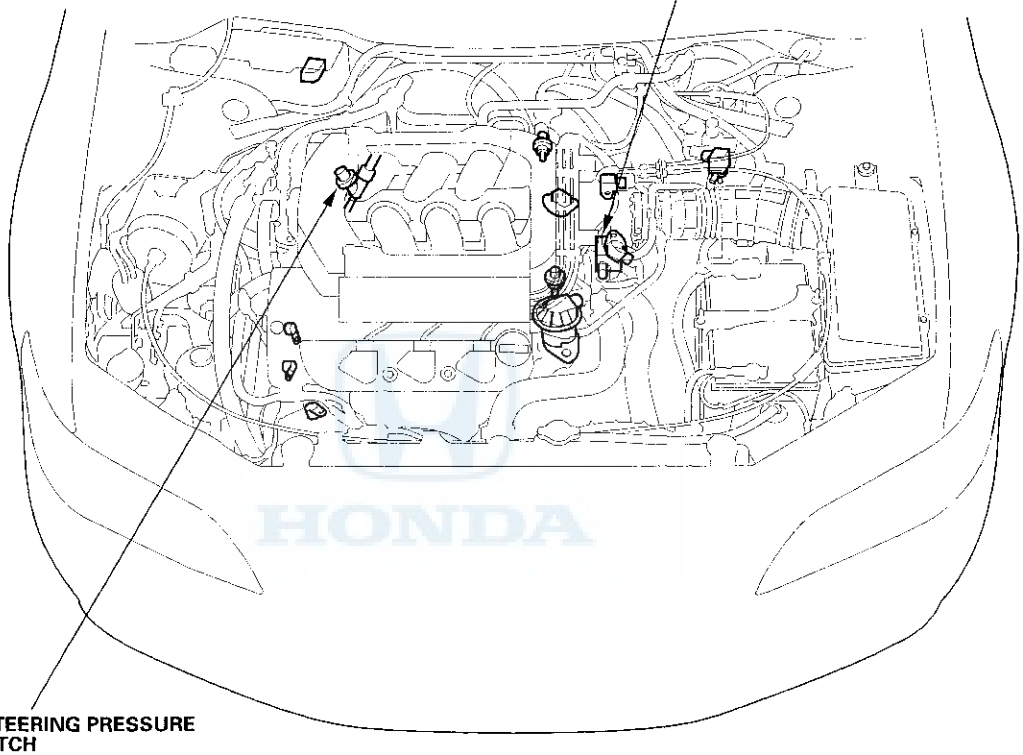

Idle Speed Adjustment

Adjust the idle speed using the Honda PGM Tester procedure if possible. If not, use the following procedure:

NOTE:
- Leave the IAC valve connected.
- Before setting the idle speed, check these items:
  - The MIL has not been reported on.
  - Ignition timing
  - Spark plugs
  - Air cleaner
  - PCV system

1. Disconnect the EVAP purge control solenoid valve 2P connector.

2. Connect a tachometer.

3. Start the engine. Hold the engine at 3,000 rpm with no load (transmission in Park or neutral position) until the radiator fan comes on, then let it idle.

4. Check the idle speed with no-load conditions: headlights, blower fan, rear defogger, radiator fan, and air conditioner are not operating.

   Idle speed should be:
   680 ± 50 rpm (in Park or neutral)

5. Adjust the idle speed, if necessary, by turning the idle adjusting screw (A) 1/4-turn clockwise or counterclockwise.

   NOTE: Do not turn the idle adjusting screw more than 1/4-turn without checking the idle speed.

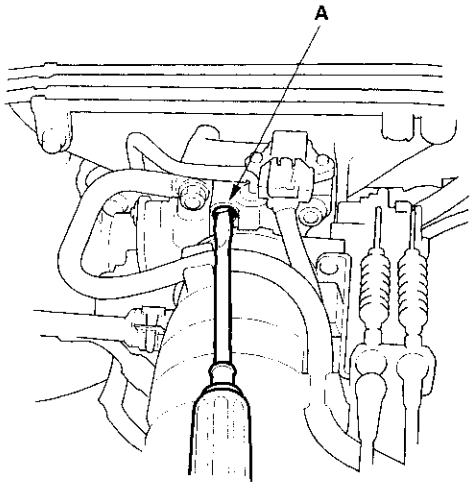

6. After turning the idle adjusting screw 1/4-turn, check the idle speed again. If it is out of spec, turn the idle adjusting screw 1/4-turn again.

7. Idle the engine for one minute with heater fan switch at HI and air conditioner on, then check the idle speed.

   Idle speed should be:
   680 ± 50 rpm (in Park or neutral)

   NOTE:
   - Do not turn the idle adjusting screw when the air conditioner is on.
   - If the idle speed is not within specification, see the Symptom Troubleshooting Index.

8. Reconnect the EVAP purge control solenoid valve 2P connector.

Component Location Index

NOTE: The illustration shows '00-01 models.

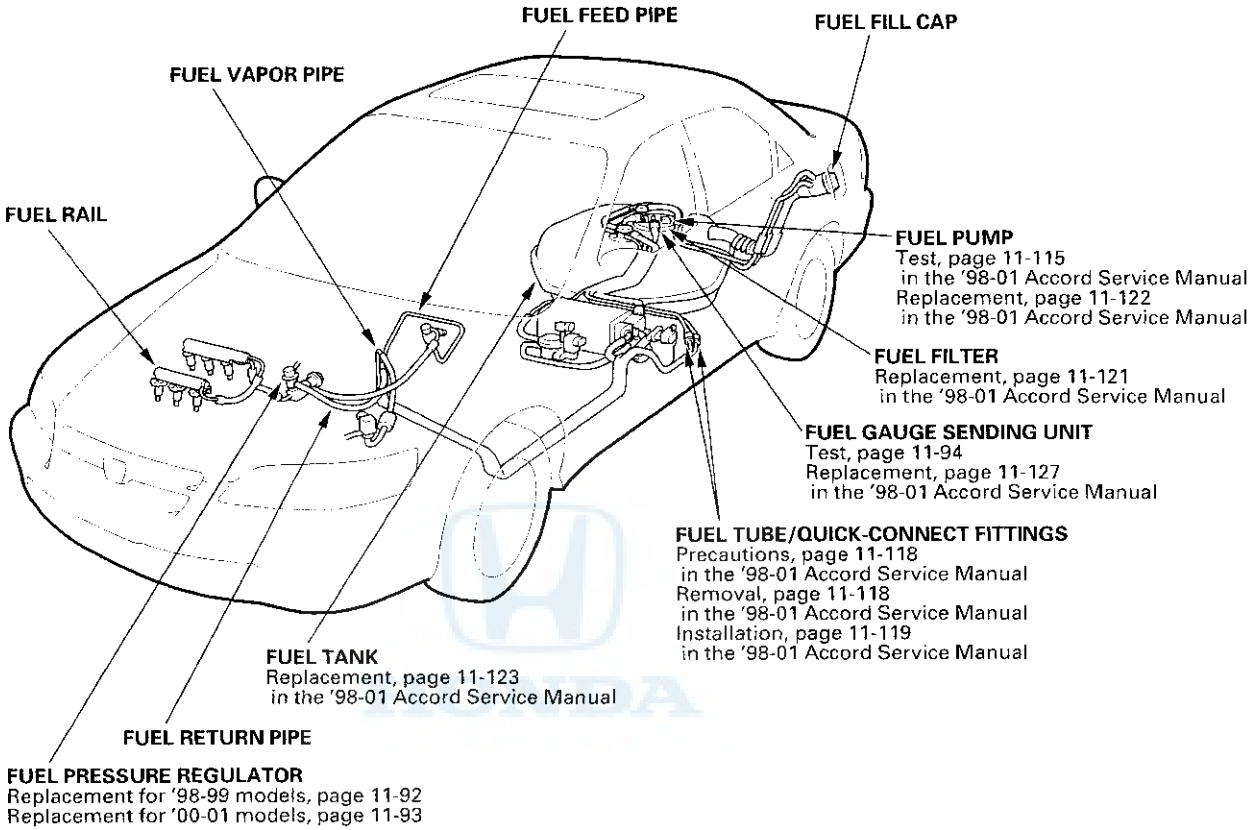

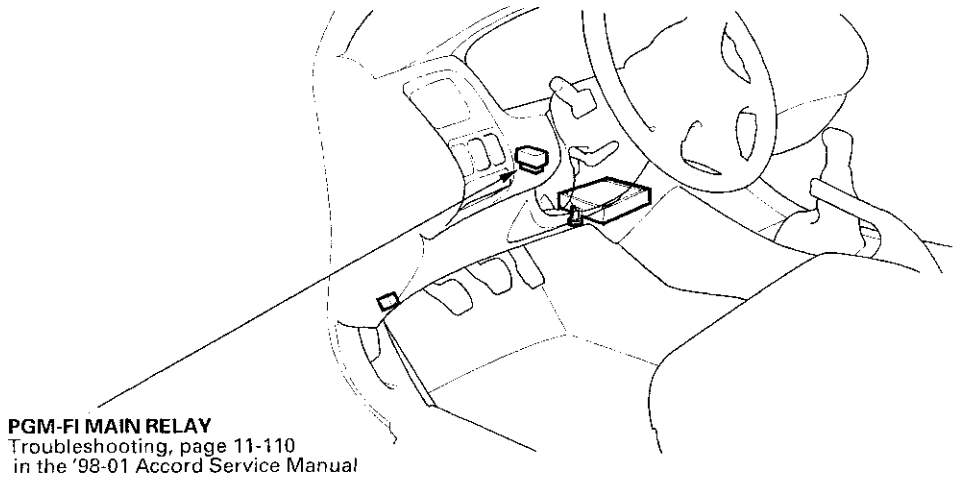

Fuel Pressure Relieving

Before disconnecting fuel pipes or hoses, release pressure from the system by loosening the fuel pulsation damper on top of the fuel rail.

1. Make sure you have the anti-theft code for the radio, then write down the frequencies for the radio's preset buttons.

2. Disconnect the battery negative cable from the battery negative terminal.

3. Remove the fuel fill cap.

4. Use a wrench on the fuel pulsation damper (A) at the fuel rail.

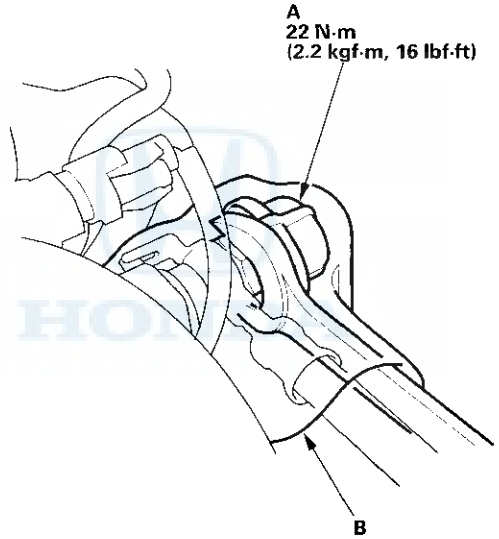

5. Place a rag or shop towel (B) over the fuel pulsation damper.

6. Slowly loosen the fuel pulsation damper (A) one complete turn.

   NOTE: Replace all washers whenever the fuel pulsation damper is loosened or removed.

Fuel Pressure Test

Special Tools Required
- Fuel pressure gauge 07406-0040001
- Fuel pressure gauge attachment 07VAJ-0040100

1. Make sure you have the anti-theft code for the radio, then write down the frequencies for the radio's preset buttons.

2. Disconnect the battery negative cable from the battery negative terminal.

3. Remove the fuel fill cap.

4. Use a wrench on the fuel pulsation damper (A) at the fuel rail.

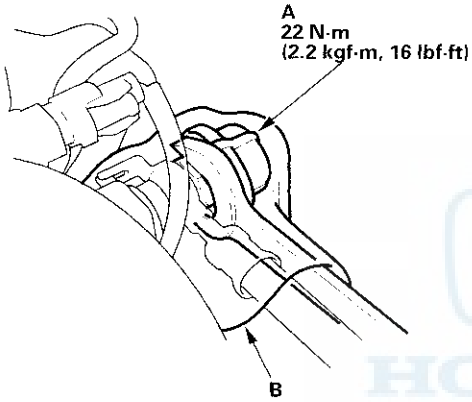

5. Place a rag or shop towel (B) over the fuel pulsation damper.

6. Slowly loosen the fuel pulsation damper 1 complete turn.

7. Remove the fuel pulsation damper from its fitting, and attach the fuel pressure gauge attachment.

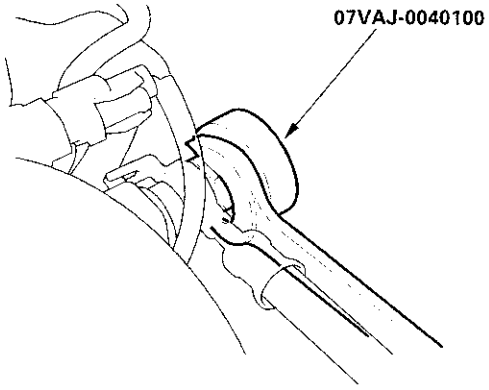

8. Attach the fuel pressure gauge.

'98-99 models:

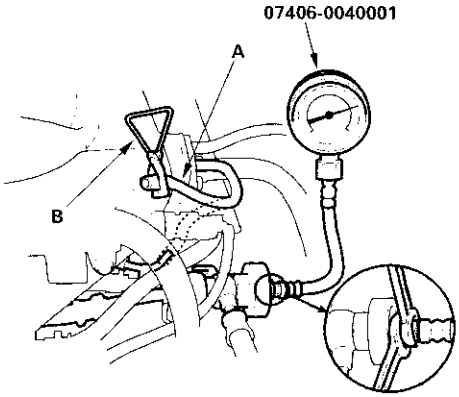

'00-01 models:

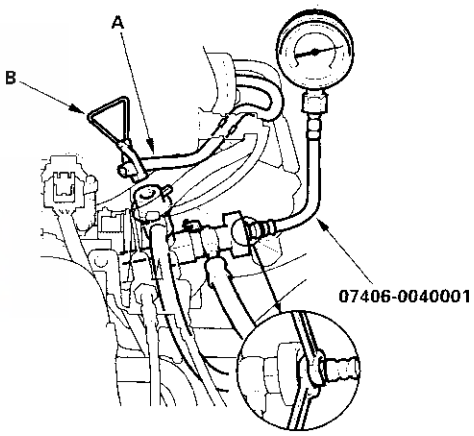

9. Disconnect the vacuum hose (A) of the fuel pressure regulator and pinch it closed with a clamp (B).

10. Start the engine and let it idle.

    - If the engine starts, go to step 12.
    - If the engine does not start, go to step 11.

11. Check to see if the fuel pump is running: remove the fuel fill cap and listen to the fuel fill port while an assistant turns the ignition switch ON (II)-you should hear the pump run for about 2 seconds when the ignition turned ON (II).

    - If the pump runs, go to step 12.
    - If the pump does not run, test it, refer to the '98-01 Accord Service Manual (see page 11-115). ■

(cont'd)

Fuel Pressure Test (cont'd)

12. Read the pressure gauge (with the fuel pressure regulator vacuum hose disconnected and clamped). The pressure should be:
    '98-00 models: 280 – 330 kPa (2.9 – 3.4 kgf/cm², 41 – 48 psi).
    '01 model: 320 – 370 kPa (3.3 – 3.8 kgf/cm², 48 – 54 psi).

    - If the pressure is OK and engine is running, go to step 13. If not running, repair the cause, then continue this test.
    - If the pressure is out of spec, go to step 14.

13. With the engine running, reconnect the vacuum hose and read the gauge again.
    The pressure should be:
    '98-00 models: 220 – 270 kPa (2.25 – 2.75 kgf/cm², 32 – 40 psi).
    '01 model: 260 – 310 kPa (2.7 – 3.2 kgf/cm², 38 – 46 psi).

    - If the fuel pressure is OK, the test is complete. Go to step 15.
    - If the pressure is out of spec, go to step 14.

14. Disconnect the vacuum hose from the pressure regulator again while you watch the pressure gauge. The pressure should rise when you disconnect the hose.

    - If the pressure did not rise, replace the fuel pressure regulator for '98-99 models (see page 11-92) or for '00-01 models (see page 11-93), and recheck the fuel pressure.
    - If the pressure rose, and all your readings were within spec, go to step 15.
    - If the pressure rose, but your readings were out of spec, check for these problems:
      - If the pressure is too low, check for a clogged fuel filter and for leaks in the fuel lines. ■
      - If the pressure is too high, check for a pinched or clogged fuel return hose or line. ■

15. Reconnect the vacuum hose, remove the pressure gauge, and reinstall the fuel pulsation damper and a new washer.Tighten the fuel pulsation damper to 22 N·m (2.2kgf·m, 16 lbf·ft).

    NOTE: Disassemble and clean the fuel pressure gauge attachment thoroughly after use.

Fuel Lines Inspection

Check the fuel system lines, hoses, and fuel filter for damage, leaks, and deterioration, and replace if necessary.

NOTE: The illustration shows '00-01 models.

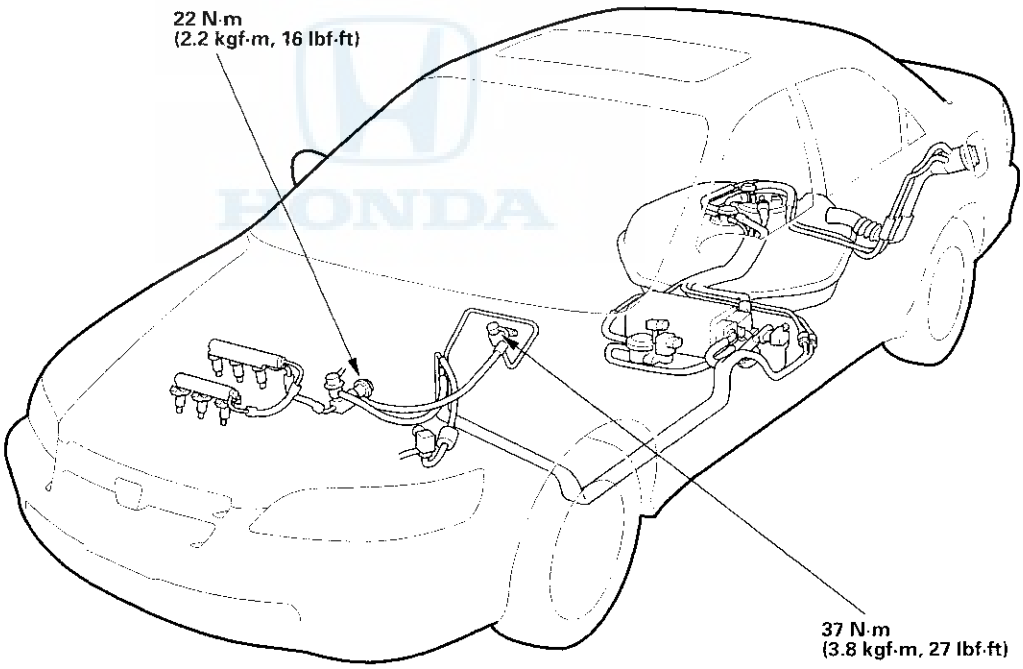

Fuel Pressure Regulator Replacement

'98-99 models:

1. Remove the intake manifold cover and intake manifold.

2. Place a shop towel under the fuel pressure regulator, then relieve fuel pressure (see page 11-88).

3. Disconnect the vacuum hose (A) and fuel return hose (B).

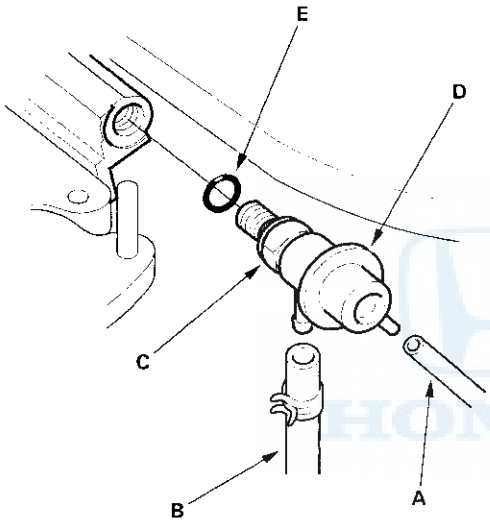

4. Loosen the locking nut (C), and remove the fuel pressure regulator (D).

5. Apply clean engine oil to a new O-ring (E), and carefully install it into its proper position.

6. Install the fuel pressure regulator in the fuel rail. Turn it by hand until stops.

7. Turn the fuel pressure regulator (A) counterclockwise to set the angle as shown.

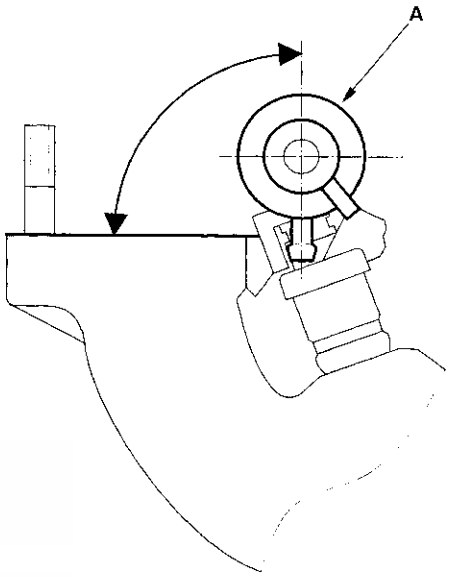

8. Tighten the locking nut to 29 N·m (3.0 kgf·m, 22 lbf·ft).

NOTE:
- Replace the O-ring.
- When assembling the fuel pressure regulator, apply clean engine oil to the O-ring and assemble it into its proper position, taking care not to damage the O-ring.

'00-01 models:

1. Place a shop towel under the fuel pressure regulator, then relieve fuel pressure (see page 11-88).

2. Disconnect the vacuum hose (A) and fuel return hose (B).

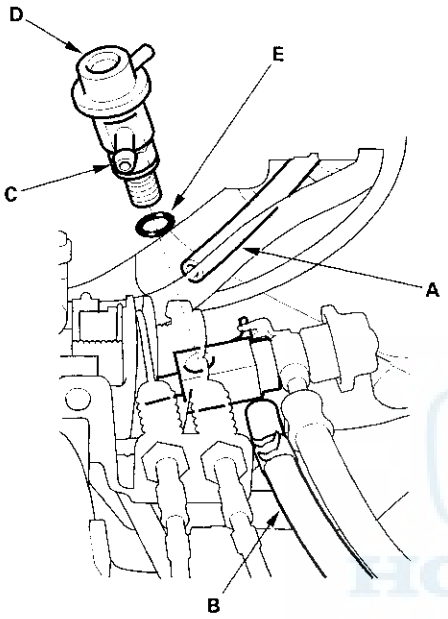

3. Loosen the locking nut (C), and remove the fuel pressure regulator (D).

4. Apply clean engine oil to a new O-ring (E), and carefully install it into its proper position.

5. Install the fuel pressure regulator in the fuel joint. Turn it by hand until stops.

6. Turn the fuel pressure regulator (A) counterclockwise to set the angle as shown.

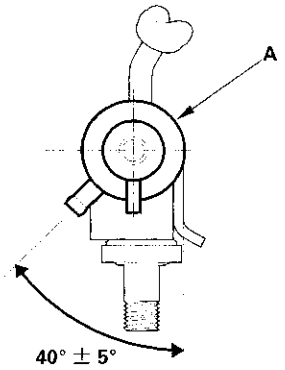

7. Tighten the locking nut to 29 N·m (3.0 kgf·m, 22 lbf·ft).

   NOTE:
   - Replace the O-ring.
   - When assembling the fuel pressure regulator, apply clean engine oil to the O-ring and assemble it into its proper position, taking care not to damage the O-ring.

Fuel Gauge Test

NOTE: For the fuel gauge system circuit diagram , refer to the '98-01 Accord Service Manual (see page 22-60).

1. Check the No. 9 BACK UP LIGHT INSTRUMENT LIGHT (7.5 A) fuse in the driver's under-dash fuse/relay box before testing.

2. Remove the spare tire lid.

3. Remove the access panel from the floor.

4. Turn the ignition switch OFF, then disconnect the fuel pump 5P connector.

5. Measure voltage between the fuel pump 5P connector terminals No. 1 and No. 2 with the ignition switch ON (II). There should be between 5 and 8 V.

   - If the voltage is as specified, go to step 6.
   - If the voltage is not as specified, check for:

     – an open in the YEL/BLU or BLK wire.
     – poor ground (G552).

FUEL PUMP 5P CONNECTOR

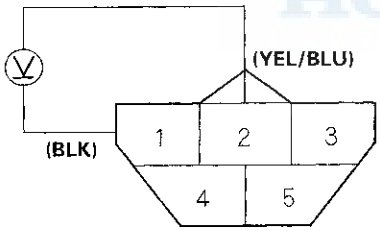

Wire side of female terminals

6. Turn the ignition switch OFF.

7. Install a 2 Ω resistor between the fuel pump 5P connector terminals No. 1 and No. 2, then turn the ignition switch ON (II).

FUEL PUMP 5P CONNECTOR

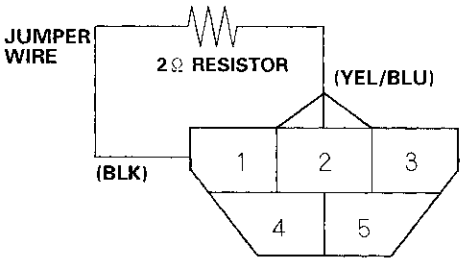

Wire side of female terminals

8. Check that the pointer of the fuel gauge starts moving toward the "F" mark.

   - If the pointer of the fuel gauge does not move at all, replace the gauge.
   - If the gauge is OK, inspect the fuel gauge sending unit, refer to the '98-01 Accord Service Manual (see page 11-127).

   NOTE:
   - Turn the ignition switch OFF before the pointer reaches "F" on the gauge dial. Failure to do so may damage the fuel gauge.
   - The fuel gauge is a bobbin (cross-coil) type, so the fuel level is continuously indicated even when the ignition switch is OFF, and the pointer moves more slowly than that of a bimetal type.

Component Location Index

NOTE: The illustration shows '00-01 models.

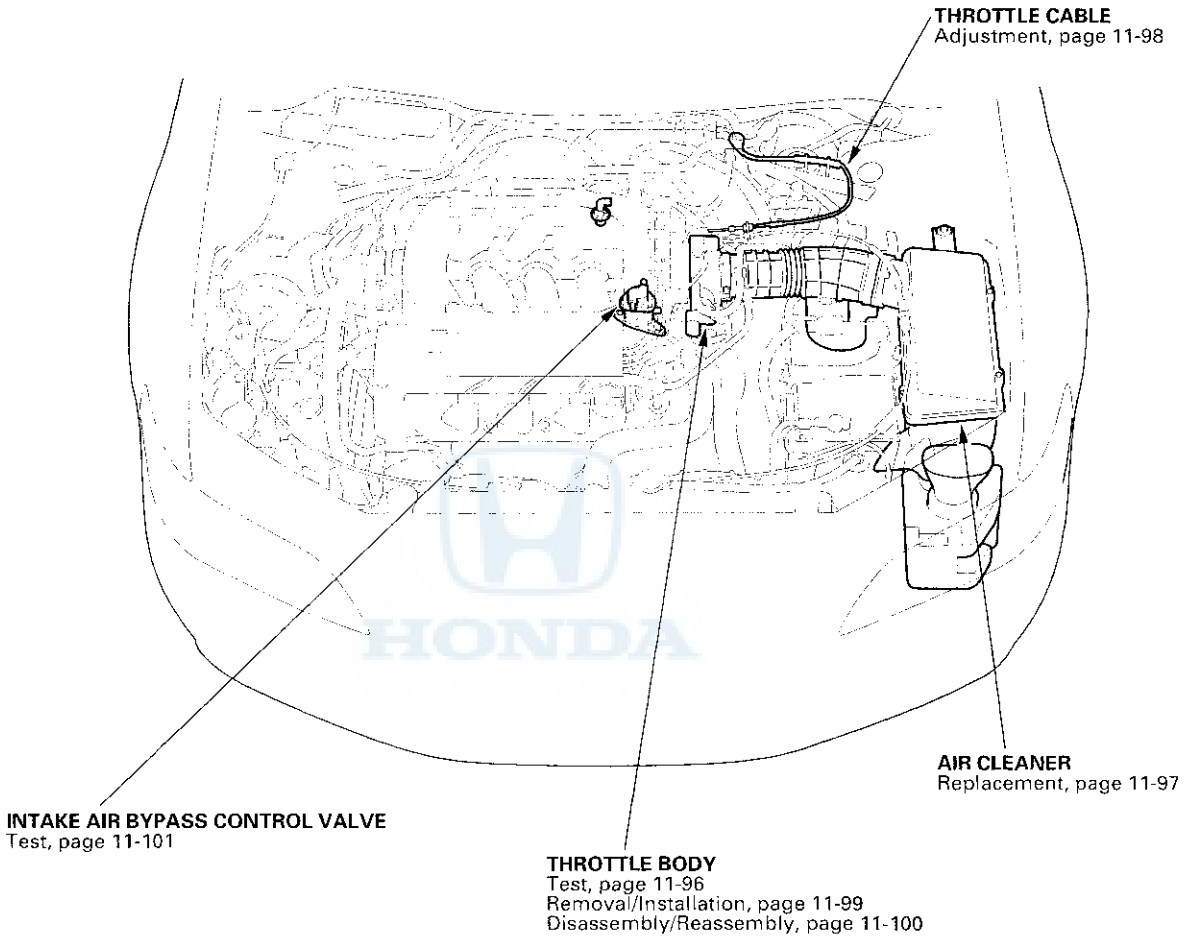

Throttle Body Test

Special Tools Required
Vacuum Pump/Gauge, 0—30 in.Hg
A973X-041-XXXXX

1. Disconnect the vacuum hose (A) between the top of the throttle body at the intake air bypass control valve, and connect it to a vacuum gauge.

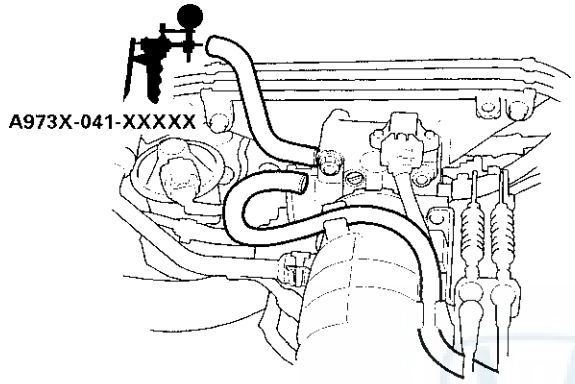

2. Start the engine. Hold the engine at 3,000 rpm with no load (in Park or neutral) until the radiator fan comes on, then let it idle. The gauge should not indicate any vacuum.

   - If the gauge indicates vacuum, check and if necessary adjust the throttle cable (see page 11-98), then go to step 3.
   - If the gauge does not indicate vacuum, go to step 3.

3. Open the throttle slightly from idle and check the gauge again. The gauge should indicate vacuum.

   - If the gauge indicates vacuum, go to step 4.
   - If the gauge does not indicate vacuum, check the throttle body port. If it's clogged, clean it with carburetor cleaner, then go to step 4.

4. With the engine OFF, check the throttle cable operation. The cable should operate without binding or sticking.

   - If the cable is OK, go to step 5.
   - If the cable binds or sticks, check it and its routing. If it's faulty, reroute it or replace it and adjust it (see page 11-98), then go to step 5.

5. Operate the throttle lever by hand to see if the throttle valve and/or shaft are too loose or too tight.

   - If there is excessive play in the throttle valve shaft or the throttle valve binds at the fully closed position, replace the throttle body.
   - If the throttle valve and shaft are OK, go to step 6.

6. Check for clearance (A) between the throttle stop screw (B) and the throttle lever (C) at the fully closed position. If there is any clearance, replace the throttle body (see page 11-99). Do not adjust the throttle stop screw.

Air Cleaner Element Replacement

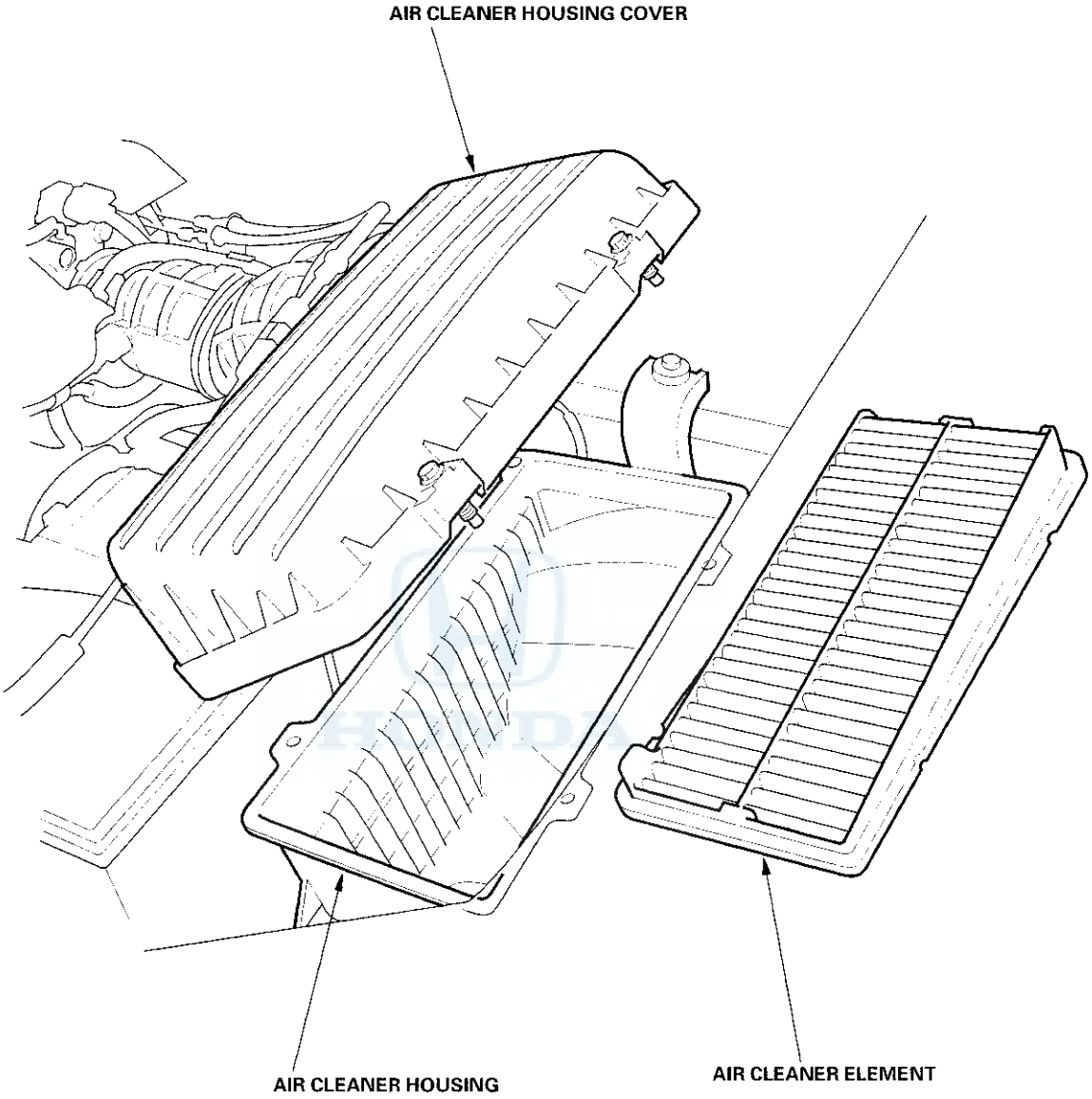

Throttle Cable Adjustment

1. Start the engine. Hold the engine at 3,000 rpm with no load (in Park or neutral) until the radiator fan comes on, then let it idle.

2. Hold the throttle link (A) to the throttle lever (B). There should be no clearance.

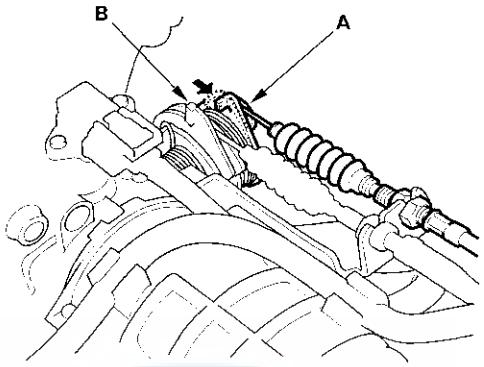

3. Check cable free play at the throttle linkage. Cable deflection (A) should be 10 – 12 mm (3/8 – 1/2 in.)

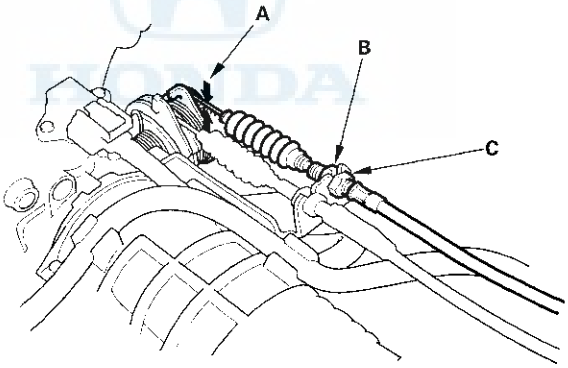

4. If deflection is not within spec (10 – 12 mm, 3/8 – 1/2 in.) loosen the locknut (B), turn the adjusting nut (C) until the deflection is as specified, then retighten the locknut.

5. With the cable properly adjusted, check the throttle valve to be sure it opens fully when you push the accelerator pedal to the floor. Also check the throttle valve to be sure it returns to the idle position whenever you release the accelerator pedal.

Throttle Body Removal/Installation

NOTE:
- Do not adjust the throttle stop screw.
- After reassembly, adjust the cruise control cable (see page 4-54) and the throttle cable (see page 11-98).
- The TP sensor is not removable.

'98-99 models:

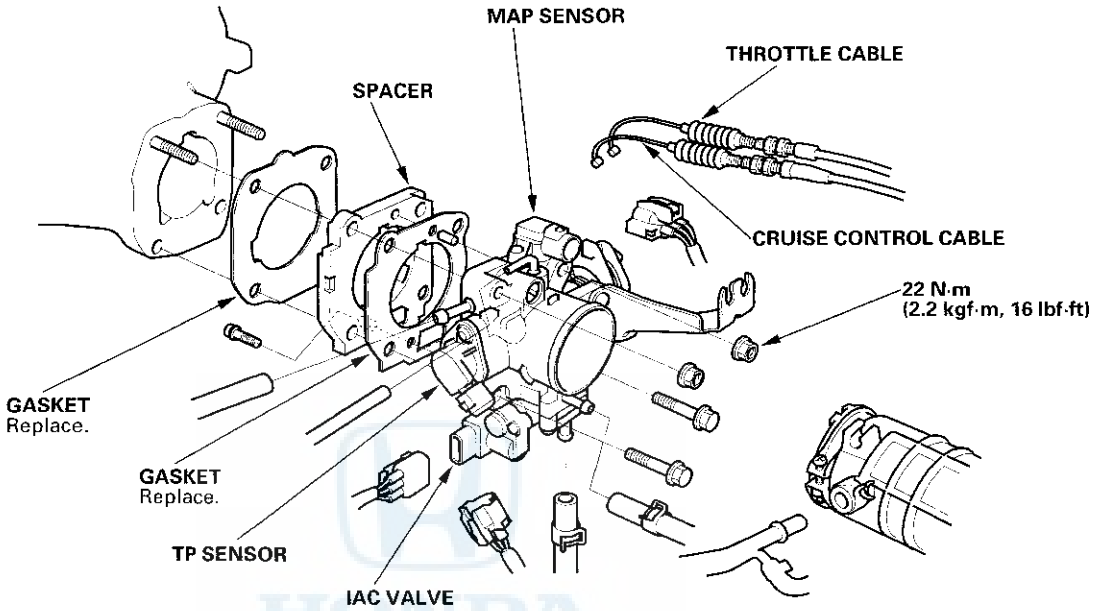

'00-01 models:

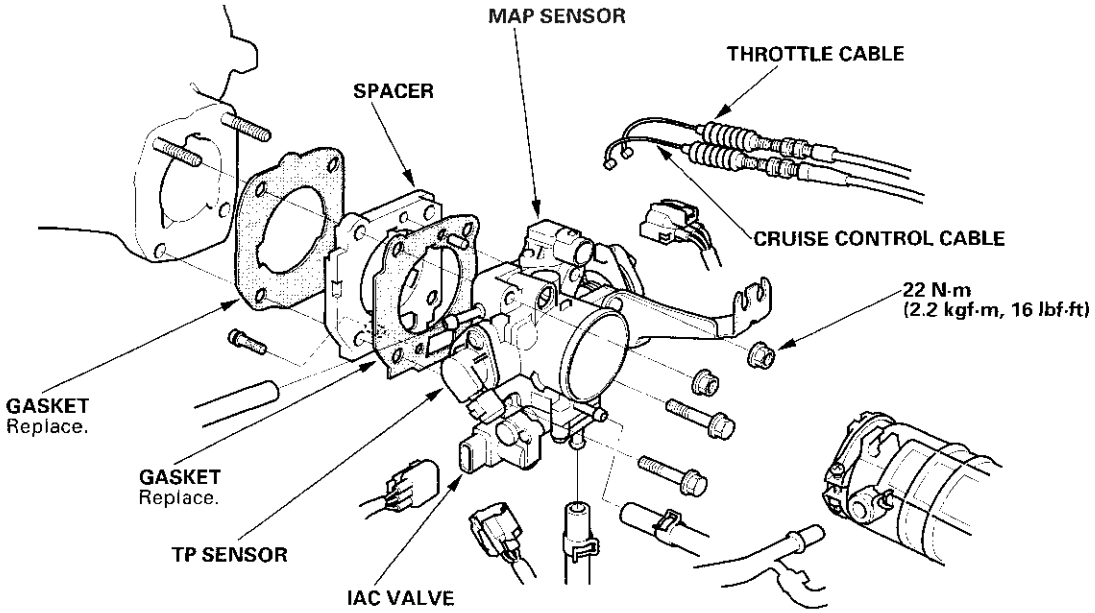

Throttle Body Disassembly/Reassembly

'98-99 models:

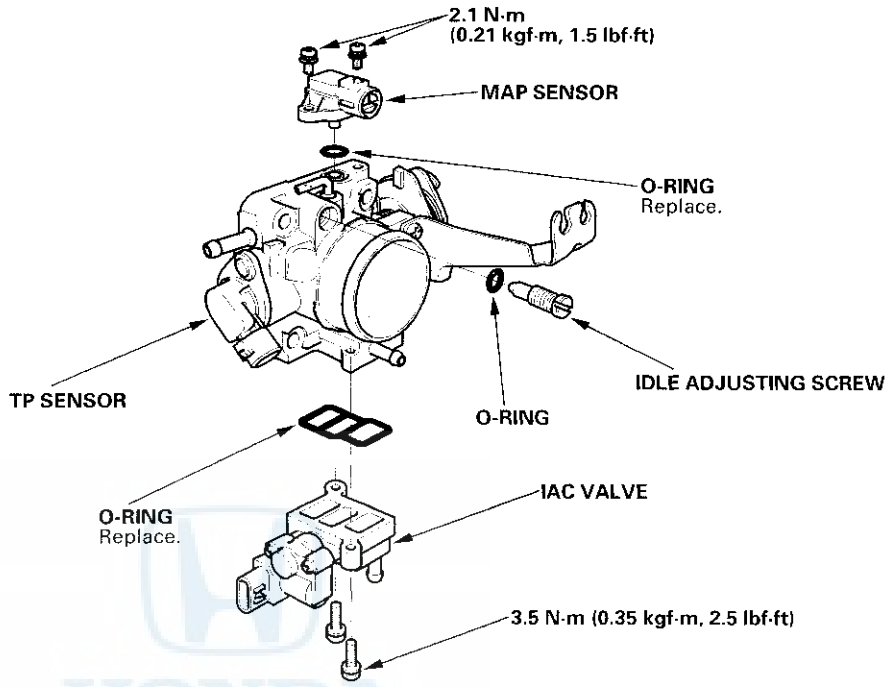

'00-01 models:

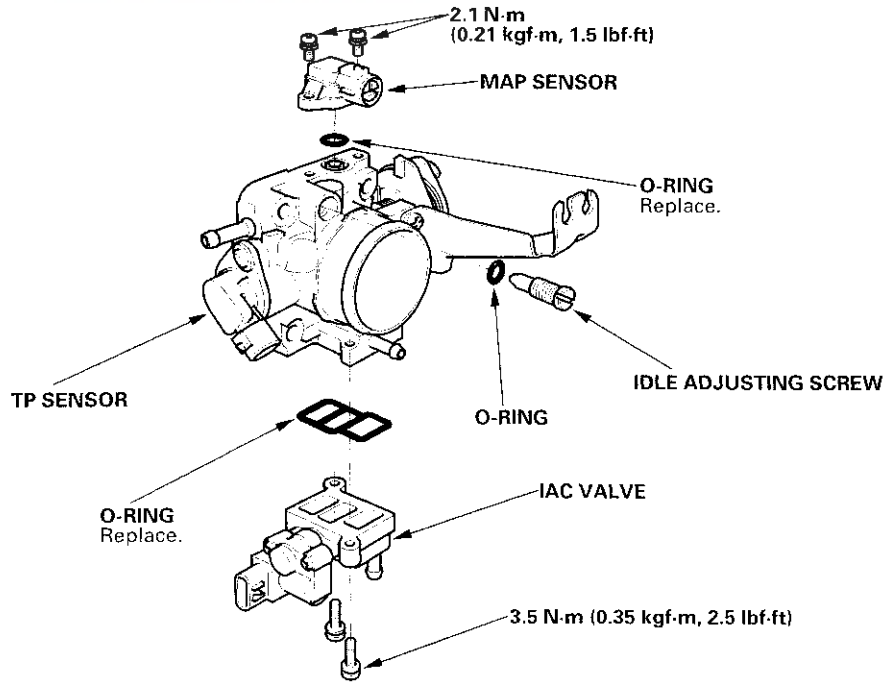

Intake Air (IA) Bypass Control Valve Test

Special Tools Required:
Vacuum pump gauge, 0 – 30 in.Hg
A973X-041-XXXXX

'98-99 models:

1. Start the engine. Hold the engine at 3,000 rpm with no load (in Park or neutral position) until the radiator fan comes on, then let it idle.

2. Remove the vacuum hose (A) from the install pipe, and connect a vacuum gauge to the hose.

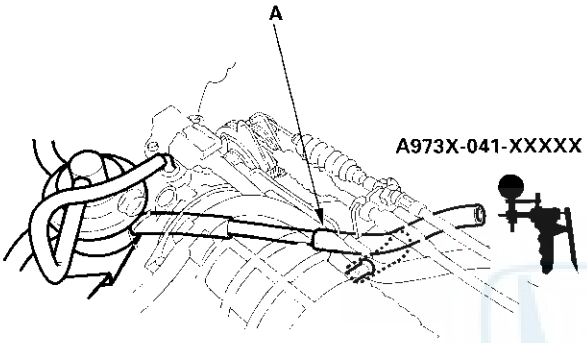

3. Raise and lower the engine speed, and make sure the vacuum gauge reading changes as the rpm changes.
   If the vacuum reading does not change check for these problems:

   - Misrouted, leaking, broken, or clogged intake air bypass control system vacuum lines.
   - A cracked or damaged intake air bypass control valve.

'00-01 models:

1. Start the engine. then let it idle.

   NOTE: Engine coolant temperature must be below 104°F (40°C).

2. Remove the vacuum hose (A) from the install pipe, and connect a vacuum gauge to the hose.

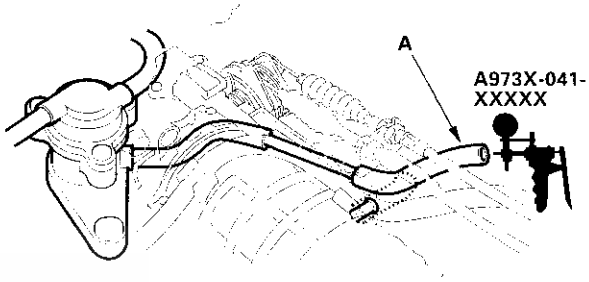

3. Raise and lower the engine speed, and make sure the vacuum gauge reading changes as the rpm changes.

   If the vacuum reading does not change, check for these problems:

   - Misrouted, leaking, broken, or clogged intake air bypass control system vacuum lines.
   - A cracked or damage intake air bypass control valve.

4. Hold the engine at 3,000 rpm with no load (in Park or neutral position) until the radiator fan comes on, then let it idle.

5. Raise and lower the engine speed, and make sure the vacuum gauge reading does not change as the rpm changes.

   If the vacuum reading changes check for these problems:

   - Misrouted, leaking, broken, or clogged intake air bypass control system vacuum lines.
   - A cracked or damage intake air bypass control valve.

PCV Valve Inspection and Test

1. Check the PCV valve (A) and hoses (B) and connections for leaks and restrictions.

'98-99 models:

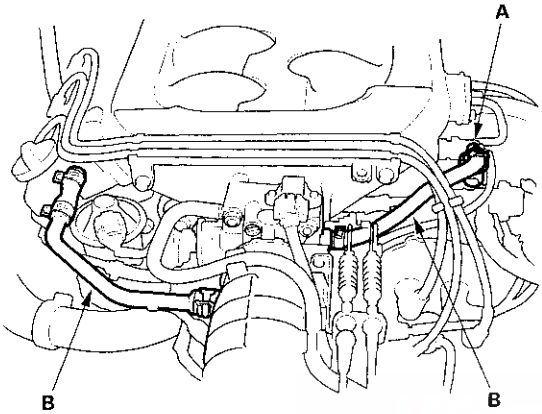

'00-01 models:

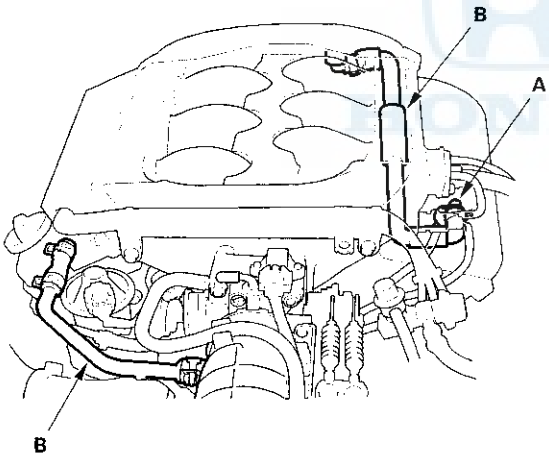

2. At idle, make sure there is a clicking sound from the PCV valve when the hose between the PCV valve and intake manifold is lightly pinched (A) with your fingers or pliers.
If there is no clicking sound, check the PCV valve grommet for cracks or damage. If the grommet is OK, replace the PCV valve and recheck.

'98-99 models:

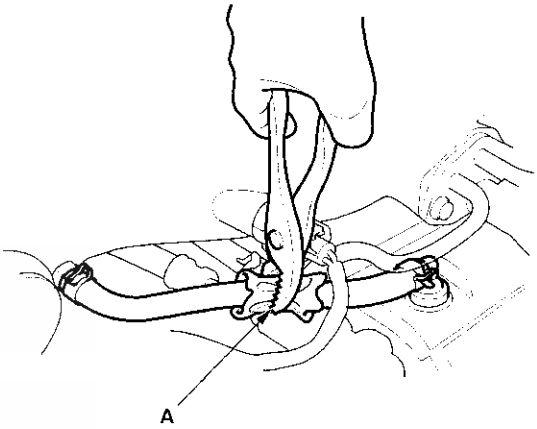

'00-01 models:

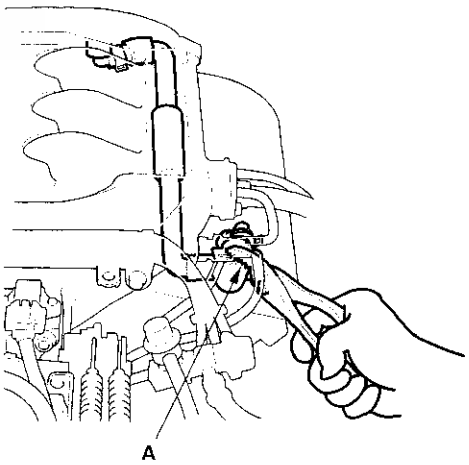

Component Location Index

NOTE: The illustration shows '00-01 models.

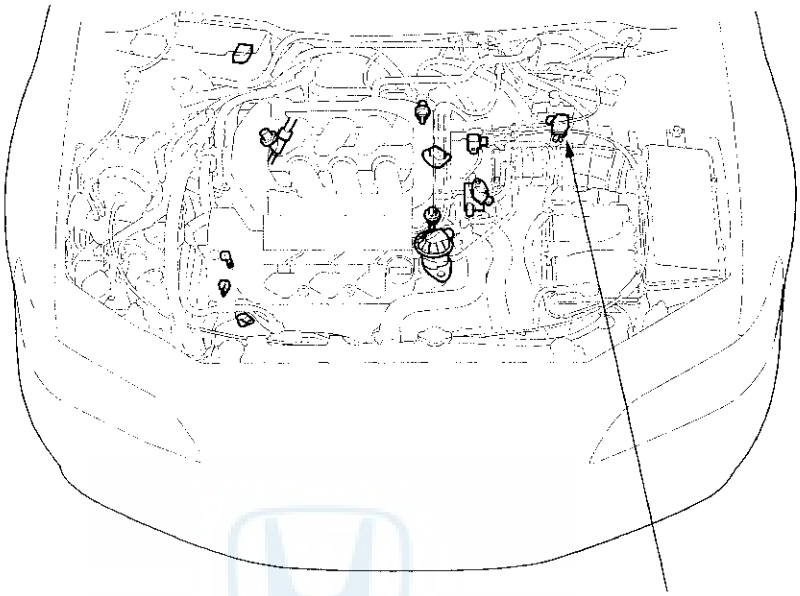

EVAPORATIVE EMISSION (EVAP) CANISTER PURGE VALVE

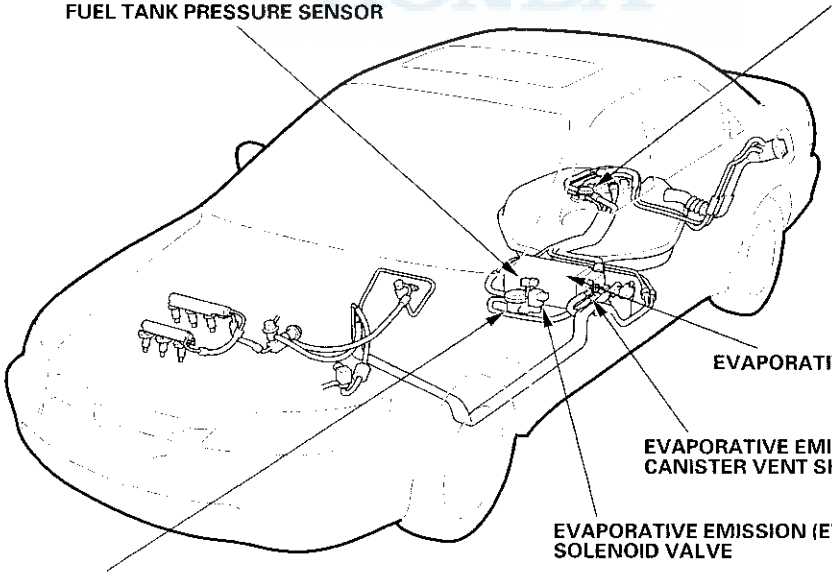

FUEL TANK PRESSURE SENSOR

FUEL TANK VAPOR CONTROL VALVE
Test, page 11-159
in the '98-01 Accord Service Manual
Replacement, page 11-161
in the '98-01 Accord Service Manual

EVAPORATIVE EMISSION (EVAP) CANISTER

EVAPORATIVE EMISSION (EVAP) CANISTER VENT SHUT VALVE

EVAPORATIVE EMISSION (EVAP) BYPASS SOLENOID VALVE

EVAPORATIVE EMISSION (EVAP) TWO-WAY VALVE
Test, page 11-158
in the '98-01 Accord Service Manual

Automatic Transmission

Automatic Transmission

A/T Gear Position Indicator

A/T Interlock System

Transmission End Cover

Transmission Housing

Valve Body

Torque Converter Housing

Shafts and Clutches

A/T Differential

Outline of V6 Model Change

The B7XA automatic transmission has been added.

Special Tools

Ref.No.	Tool Number	Description	Qty
①	07GAB-PF50101 or 07GAB-PF50100	Mainshaft Holder	1
②	07GAD-PG40101 or 07GAD-PG40100	Seal Driver Attachment	1
③	07GAE-PG40200 or 07GAE-PG4020A	Clutch Spring Compressor Bolt Assembly	1
*④	07HAC-PK40102	Housing Puller	1
⑤	07HAJ-PK40201	Preload Inspection Tool	1
⑥	07JAD-PH80101	Oil Seal Driver Attachment	1
⑦	07JAD-PH80400	Pilot, 28 x 30 mm	1
⑧	07LAD-PW50601	Attachment, 40 x 50 mm	1
**⑨	07LAE-PX40100	Clutch Spring Compressor Attachment	2
⑩	07MAJ-PY4011A	A/T Pressure Hose, 2,210 mm	4
⑪	07MAJ-PY40120	A/T Pressure Hose Adapter	4
⑫	07NAD-PX40100	Attachment, 78 x 80 mm	1
⑬	07SAZ-001000A	Backprobe Set	2
⑭	07WAZ-002010A	SCS Service Connector (DLC)	1
⑮	07406-0020400	A/T Oil Pressure Gauge Set W/Panel	1
***⑯	07736-A01000B or 07736-A01000A	Adjustable Bearing Puller, 25 – 40 mm	1
⑰	07746-0010300	Attachment, 42 x 47 mm	1
⑱	07746-0010500	Attachment, 62 x 68 mm	1
⑲	07746-0010600	Attachment, 72 x 75 mm	1
⑳	07746-0030100	Driver 40 mm I.D.	1
㉑	07749-0010000	Driver	1
㉒	07947-6340500	Driver Attachment	1

* If the top arm is too short, replace it with 07SAC-P0Z01001.
** 07HAE-PL50101 may be used to substitute one of these tools.
*** Must be used with commercially available 3/8"-16 slide hammer.

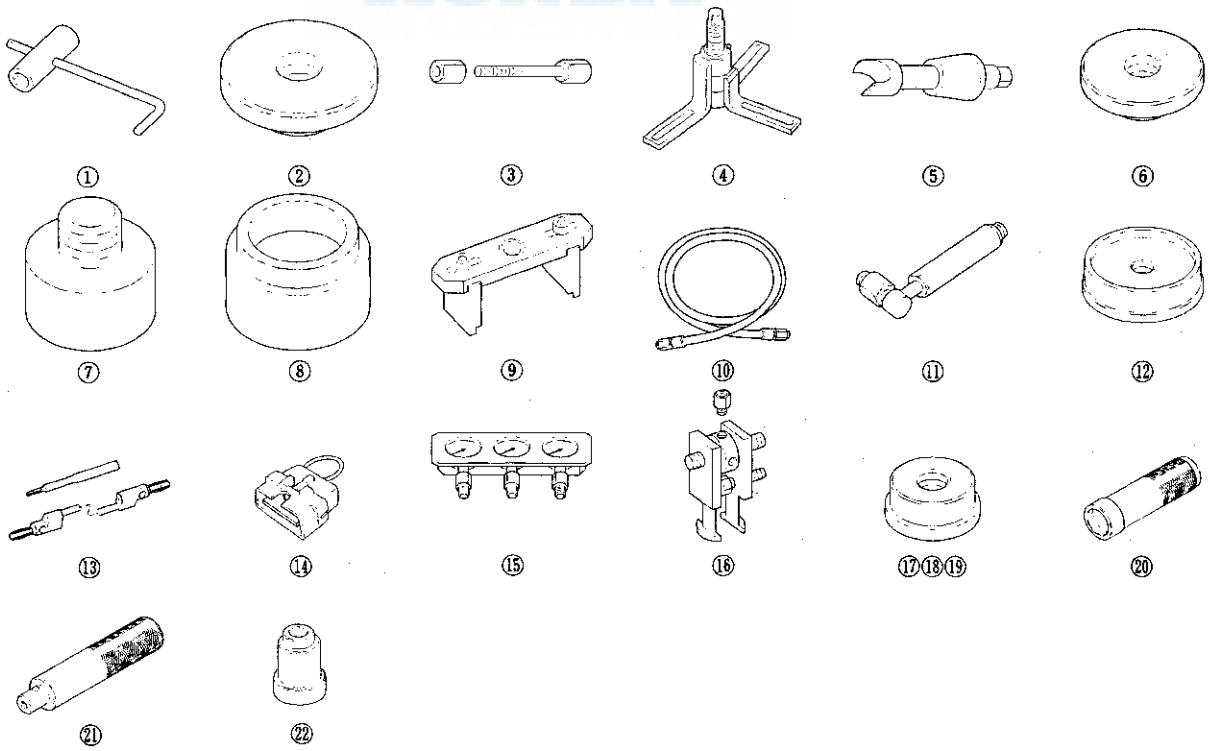

General Troubleshooting Information

How to Check for DTCs with the PGM Tester/Scan Tool

When the PCM senses an abnormality in the input or output systems, the D4 indicator light in the gauge assembly will blink. When the 16P Data Link Connector (DLC) (located next to the driver's side kick panel) is connected to the OBD II Scan Tool or Honda PGM Tester as shown, the scan tool or tester will indicate the Diagnostic Trouble Code (DTC) when the ignition switch is turned ON(II).

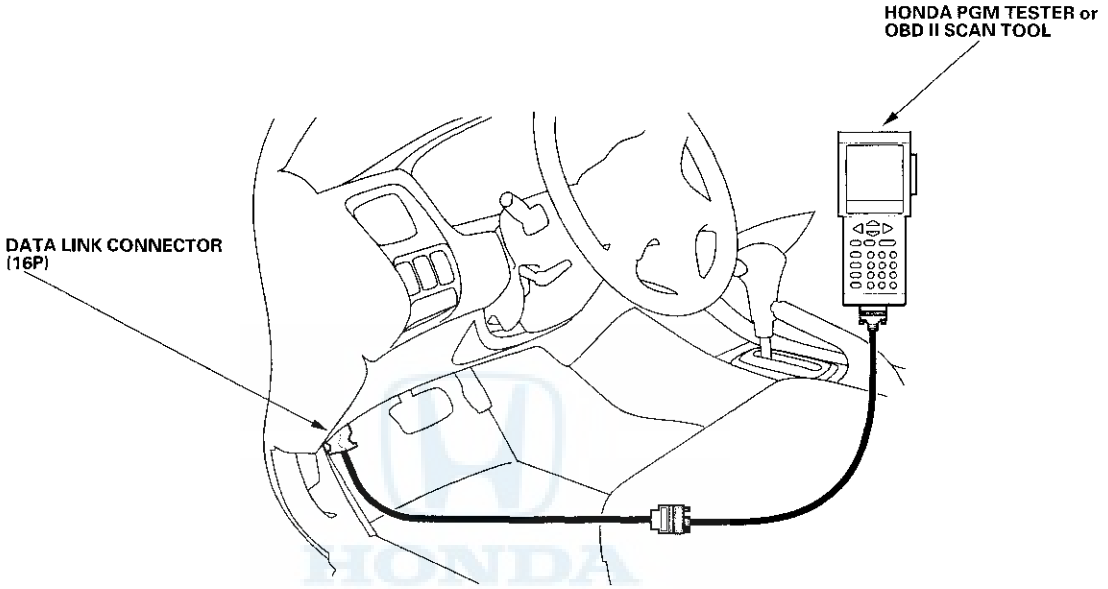

If the D4 indicator light or the MIL has been reported on, or if a driveability problem is suspected, follow this procedure:

1. Connect the OBD II Scan Tool (conforming to SAE J1978) or Honda PGM Tester to the 16P DLC. (See the OBD II Scan Tool or Honda PGM Tester user's manual for specific instructions. If you are using the Honda PGM Tester, make sure it is set to the SAE DTC type.)

2. Turn the ignition switch ON (II), and observe the DTC on the screen.

3. Record all fuel and emission DTCs, A/T DTCs, and freeze data.

4. If there is a fuel and emissions DTC, first check the fuel and emissions system as indicated by the DTC (except for DTC P0700). DTC P0700 means there is one or more A/T DTC, and no problems were detected in the fuel and emissions circuit of the PCM.

5. Get the anti-theft code for the radio, then write down the radio station presets.

6. Reset the memory with the PGM Tester or by removing the BACK UP fuse in the passenger's under-dash fuse/relay box for more than 10 seconds.

7. Drive the vehicle for several minuites in the freeze data conditions or at speeds over 30mph (50 km/hr), and then recheck for DTCs. If the A/T DTC returns, go to the DTC Troubleshooting Index on page 14-7. If the DTC does not return, there was an intermittent problem within the circuit. Make sure all pins and terminals in the circuit are tight, and then go to step 8.

8. Enter the radio code, reset the radio preset stations, and set the clock.

(cont'd)

General Troubleshooting Information (cont'd)

How to Check for DTCs

When the PCM senses an abnormality in the input or output systems, the D4 indicator light in the gauge assembly will usually blink and/or the Malfunction Indicator Lamp (MIL) may come on. When the Data Link Connector (DLC) (located next to the driver's side kick panel) is connected to the Honda PGM Tester, the D4 indicator light will blink the Diagnostic Trouble Code (DTC) when the ignition switch is turned ON (II).
When the D4 indicator light has been reported on, connect the Honda PGM Tester to the DLC. Turn the ignition switch ON (II), select Honda Systems, and then the SCS mode, then observe the D4 indicator light.

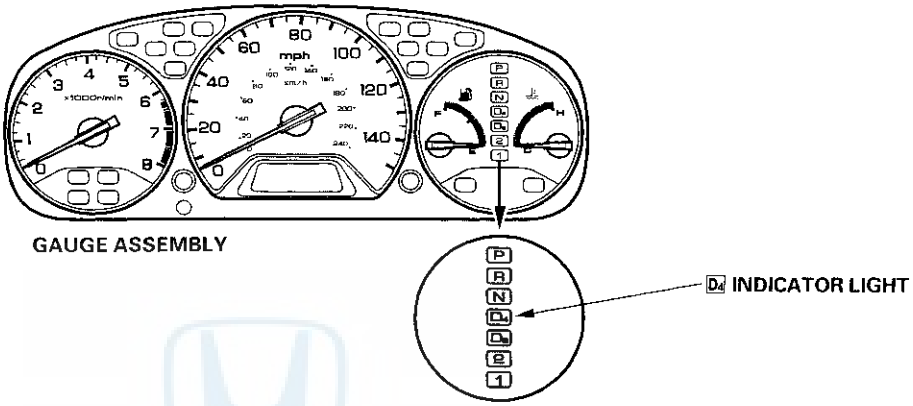

Codes 1 through 9 are indicated by individual short blinks. Codes 10 and above are indicated by a series of long and short blinks. One long blink equals 10 short blinks. Add the long and short blinks together to determine the code. After determining the code, refer to the DTC Troubleshooting Index.

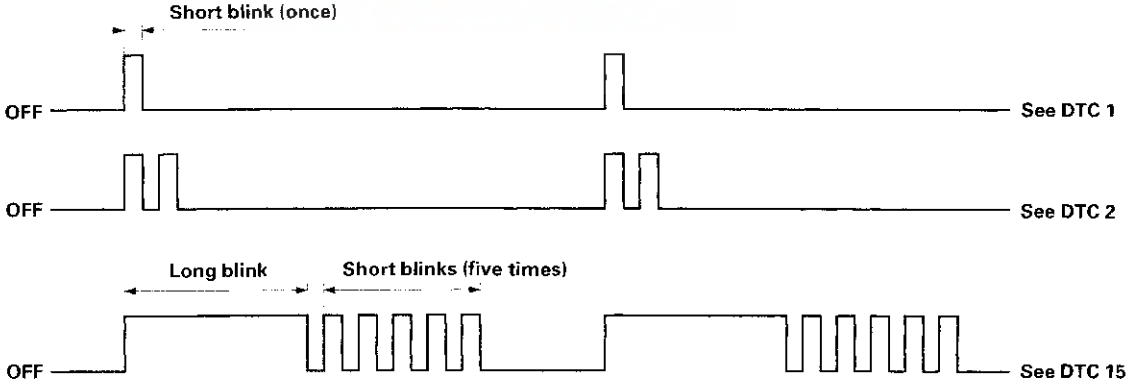

If the D4 indicator light or the MIL has been reported on, or if a driveability problem, follow this procedure:

1. Record all fuel/emissions DTCs, A/T DTCs, and freeze data.
2. If there is a fuel and emissions DTC, first check the fuel and emissions system as indicated by the DTC (except for DTC P0700), DTC P0700 means there is one or more A/T DTC, and no problems were detected in the fuel and emissions circuit of the PCM.
3. Get the customer's radio anti-theft code, and write down the numbers of the radio station presets.
4. Reset the memory by removing the BACK UP fuse in the passenger's under-dash fuse/relay box for more than 10 seconds.
5. Drive the vehicle for several minutes at a speed over 30 mph (50 km/h), and then recheck for DTCs.
   If the DTC returns, refer to the DTC Troubleshooting Index. If the DTC does no return, there was an intermittent problem within the circuit. Make sure all pins and terminals in the circuit are tight, then go to step 6.
6. Enter the radio code, reset the preset stations, and reset the clock.

How to Troubleshoot Circuits at the PCM

Special Tools Required
Backprobe set 07SAZ-001000A (Two required)

SRS components are located in this area. Review the SRS components locations, precautions, and procedures in the SRS section before performing repairs or service, refer to the '98-01 Accord Service Manual (see page 23-28).

1. Pull back the carpet from the passenger's side of the center console to expose the PCM.

2. Inspect the circuit on the PCM, according to the DTC troubleshooting, with the special tools and a digital multimeter.

3. Connect the backprobe adapters (A) to the stacking patch cords (B), and connect the cords to a multimeter (C). Using the wire insulation as a guide for the contoured tip of the backprobe adapter, gently slide the tip into the connector from the wire side until it comes in contact with the terminal end of the wire.

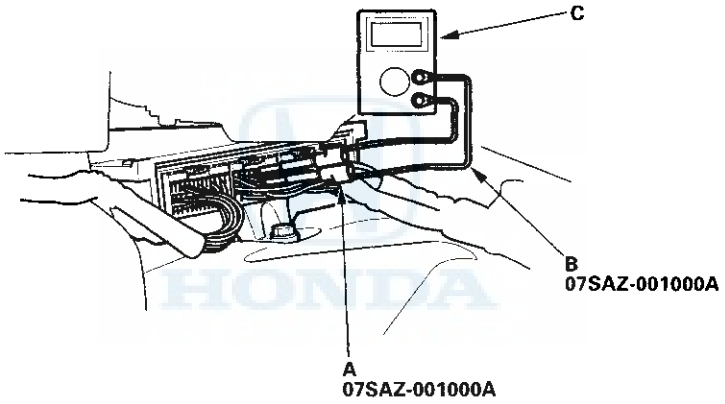

(cont'd)

General Troubleshooting Information (cont'd)

How to Reset the PCM

1. Make sure you have the anti-theft code for the radio, then write down the radio station presets.
2. Turn the ignition switch OFF.
3. Use one of these methods to reset the PCM memory:
   - Use the OBD II Scan Tool or the Honda PGM Tester.
   - Remove the BACK UP fuse (7.5 A)(A) from the passenger's under-dash fuse/relay box (B) for 10 seconds.

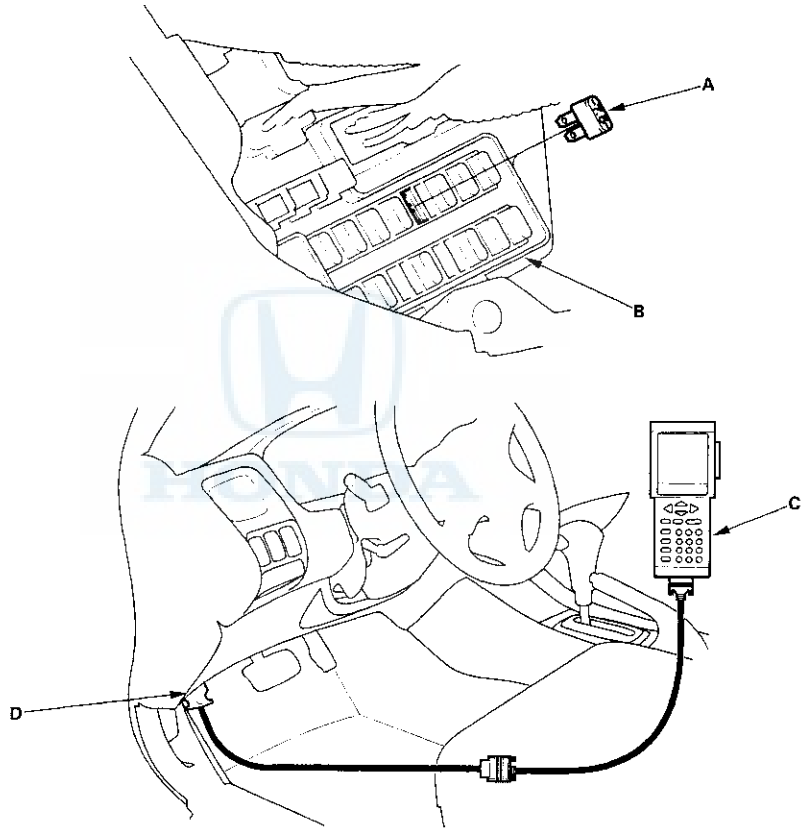

How to End a Troubleshooting Session

This procedure must be done after any troubleshooting.

1. Turn the ignition switch OFF.
2. Disconnect the OBD II Scan Tool or Honda PGM Tester (C) from the DLC (D).
3. Reset the PCM.
4. Turn the ignition switch ON (II).
5. Enter the radio code, reset the preset stations, and set the clock.
6. To verify that the problem is repaired, test-drive the vehicle for several minuites at speeds over 30 mph (48km/h).

DTC Troubleshooting Index

NOTE: Record all freeze data before you troubleshoot.

DTC*	D4 Indicator Light	MIL	Detection Item	Page
P0715 (15)	Blinks	ON	Mainshaft speed sensor	(see page 14-77)
P0720 (9)	Blinks	ON	Countershaft speed sensor	(see page 14-76)
P0730 (41)	OFF	ON	Shift control system	(see page 14-90)
P0740 (40)	OFF	ON	Lock-up control system	(see page 14-89)
P0753 (7)	Blinks	ON	Shift solenoid valve A	(see page 14-72)
P0758 (8)	Blinks	ON	Shift solenoid valve B	(see page 14-74)
P0763 (22)	Blinks	ON	Shift solenoid valve C	(see page 14-81)
P0780 (45)	Blinks	ON	Mechanical problem in hydraulic system	(see page 14-91)
P1705 (5)	Blinks	ON	Transmission range switch (short to ground)	(see page 14-66)
P1706 (6)	OFF	ON	Transmission range switch (open)	(see page 14-69)
P1738 (25)	OFF	OFF	2nd clutch pressure switch	(see page 14-85)
P1739 (26)	OFF	OFF	3rd clutch pressure switch	(see page 14-87)
P1750 (46)	Blinks	ON	Mechanical problem in hydraulic system	(see page 14-92)
P1751 (47)	Blinks	ON	Mechanical problem in hydraulic system	(see page 14-92)
P1753 (1)	Blinks	ON	Torque converter clutch solenoid valve	(see page 14-64)
P1768 (16)	Blinks	ON	A/T clutch pressure control solenoid valve A	(see page 14-79)
P1773 (23)	Blinks	ON	A/T clutch pressure control solenoid valve B	(see page 14-83)

The DTC in the parentheses is the flash code the D4 indicator light indicates when the Data Link Connector (DLC) is connected to the Honda PGM Tester.
NOTE: Codes P0780 (45), P1750 (46), and P1751 (47) are applied to the '00-01 models.

Symptom Troubleshooting Index

These symptoms DO NOT trigger Diagnostic Trouble Codes (DTCs) or cause the D4 indicator light to blink. If the Malfunction Indicator Lamp (MIL) was reported ON or the D4 indicator light has been blinking, check for DTCs. But if the vehicle has one of the symptoms in the following chart, check the probable causes(s) for it, in the sequence listed, until you find the problem.

Symptom	Probable cause(s)	Notes
When you turn the ignition switch ON (II), the D4 indicator light comes on and stays on or never comes on at all	A problem in the D4 indicator light circuit	Check the D4 indicator light circuit (see page 14-93).
Shift lever cannot be moved from P position while you're pushing on the brake pedal	A problem in shift lock system of interlock system	Check interlock system — shift lock system circuit (see page 14-96).
Ignition key cannot be moved from ACC (I) position to LOCK (0) position while you're pushing the ignition key with the shift lever in P position	A problem in key interlock system of interlock system	Check interlock system — key interlock system circuit (see page 14-99).

Symptom	Probable cause(s)	Notes
Engine runs, but vehicle does not move in any gear	1. Low ATF level 2. Shift cable broken or out of adjustment 3. Joint in shift cable and transmission or body worn 4. ATF pump worn or binding 5. Regulator valve stuck or spring worn 6. ATF strainer clogged 7. Mainshaft worn or damaged 8. Final gears worn or damaged 9. Transmission-to-engine assembly error 10. Axle disengaged	• Check ATF level and check ATF cooler lines for leakage and loose connections. If necessary, flush ATF cooler lines. • Check for a loose shift cable on the shift lever and the transmission control shaft. • Improper alignment of ATF pump and torque converter housing may cause ATF pump seizure. The symptoms are mostly an rpm-related ticking noise or a high pitched squeak. • Measure line pressure. • If the strainer is clogged, find the damaged components that caused debris. • Inspect the differential pinion shaft for wear under the pinion gears. If the differential pinion shaft is worn, overhaul the differential assembly, replace the ATF strainer, thoroughly clean the transmission, and flush the torque converter, cooler, and lines. • Be careful not to damage the torque converter housing when replacing the main ball bearing. You may also damage the ATF pump when you torque down the main valve body. This will result in ATF pump seizure if not detected. Use the proper tools. • Install the main seal flush with the torque converter housing. If you push it into the torque converter housing until it bottoms out, it will block the fluid return passage and result in damage.
Vehicle moves in 2 and R, but not in D4, D3, or 1 position	1. 1st accumulator defective 2. 1st gears worn or damaged 3. 1st clutch defective	• Inspect 1st clutch pressure. • Inspect the secondary shaft and 1st/2nd clutch assembly for wear and damage. • Inspect the clutch piston and O-rings. Check the spring retainer for wear and damage. Inspect the clutch end plate-to-top disc clearance. If the clearance is out of tolerance, inspect the clutch discs and plates for wear and damage. If the discs and plates are worn or damaged, replace them as a set. If they are OK, adjust the clutch end plate clearance.

(cont'd)

Symptom Troubleshooting Index (cont'd)

Symptom	Probable cause(s)	Notes
Vehicle moves in D4, D3, 1, R, but not in 2 position	1. Shift solenoid valve A defective 2. Shift valve A defective 3. 2nd accumulator defective 4. 2nd gears worn or damaged 5. 2nd clutch defective	• Check the 2 indicator light indication, and check for loose connectors. Inspect the O-rings, and check the shift solenoid valve for seizure. • Inspect the secondary shaft and 1st/2nd clutch assembly for wear and damage. • Inspect the clutch piston and O-rings. Check the spring retainer for wear and damage. Inspect the clutch end plate-to-top disc clearance. If the clearance is out of tolerance, inspect the clutch discs and plates for wear and damage. If the discs and plates are worn or damaged, replace them as a set. If they are OK, adjust the clutch end plate clearance.
Vehicle moves in D4, D3, 2, 1, but not in R position	1. Shift fork shaft stuck 2. Modulator valve defective 3. Reverse CPC valve defective 4. 4th accumulator defective 5. 4th clutch defective 6. Reverse gears worn or damaged	• Measure line pressure and 4th clutch pressure. • Check for a missing shift fork bolt on the shift fork shaft. • If the ATF strainer is clogged with particles of steel or aluminum, inspect the ATF pump. If the ATF pump is OK, and no cause for the contamination is found, replace the torque converter. • Inspect the reverse selector gear teeth chamfers, and inspect engagement teeth chamfers of the countershaft 4th gear and reverse gear. Replace the reverse gears and the reverse selector if they are worn or damaged. If the transmission makes clicking, grinding, or whirring noises, also replace the mainshaft 4th gear, reverse idler gear, and countershaft 4th gear. • If the 4th clutch feed pipe guide in the end cover is scored by the mainshaft, inspect the ball bearing for excessive movement in the transmission housing. If the ball bearing is OK, replace the end cover as it is dented. The O-ring under the guide is probably worn. • Replace the mainshaft if the bushing for the 3rd and 4th clutch feed pipes are loose or damaged. If the 4th clutch feed pipe is damaged or out of round, replace the end cover. • Inspect the clutch piston, clutch piston check valve, and O-rings. Check the spring retainer for wear and damage. Inspect the clutch end plate-to-top disc clearance. If the clearance is out of tolerance, inspect the clutch discs and plates for wear and damage. If the discs and plates are worn or damaged, replace them as a set. If they are OK, adjust the clearance with the clutch end plate.

Symptom	Probable cause(s)	Notes
Poor acceleration; flares on starting off in D4 and D3 positions: Stall speed high in D4, D3, 2, and 1 positions	1. Low ATF level 2. Shift cable broken or out of adjustment 3. ATF pump worn or binding 4. Regulator valve stuck or spring worn 5. ATF strainer clogged 6. Torque converter check valve defective	• Check ATF level and check ATF cooler lines for leakage and loose connections. If necessary, flush ATF cooler lines. • Check for a loose shift cable on the shift lever and the transmission control shaft. • Check line pressure. • Improper alignment of ATF pump and torque converter housing may cause ATF pump seizure. The symptoms are mostly an rpm-ticking noise or a high pitched squeak. • Be careful not to damage the torque converter housing when replacing the main ball bearing. You may also damage the ATF pump when you torque down the main valve body. This will result in ATF pump seizure if not detected. Use the proper tools.
Poor acceleration; flares on starting off in D4 and D3 positions: Stall speed high in D4, D3, and 1 positions	1. Shift cable broken or out of adjustment 2. 1st clutch defective	• Check for a loose shift cable on the shift lever and the transmission control shaft. • Check 1st clutch pressure. • Inspect the clutch piston and O-rings. Check the spring retainer for wear and damage. Inspect the clutch end plate-to-top disc clearance. If the clearance is out of tolerance, inspect the clutch discs and plates for wear and damage. If the discs and plates are worn or damaged, replace them as a set. If they are OK, adjust the clutch end plate clearance.
Poor acceleration; flares on starting off in 2 position: Stall speed high in 2 position	1. Shift cable broken or out of adjustment 2. 2nd clutch defective	• Check for a loose shift cable on the shift lever and the transmission control shaft. • Check 2nd clutch pressure. • Inspect the clutch piston and O-rings. Check the spring retainer for wear and damage. Inspect the clutch end plate-to-top disc clearance. If the clearance is out of tolerance, inspect the clutch discs and plates for wear and damage. If the discs and plates are worn or damaged, replace them as a set. If they are OK, adjust the clutch end plate clearance.
Poor acceleration; flares on starting off in R position: Stall speed is in specification in D4, D3, 2, and 1 positions, but high in R position	4th clutch defective	• Check 4th clutch pressure. • Inspect the clutch piston, clutch piston check valve, and O-rings. Check the spring retainer for wear and damage. Inspect the clutch end plate-to-top disc clearance. If the clearance is out of tolerance, inspect the clutch discs and plates for wear and damage. If the discs and plates are worn or damaged, replace them as a set. If they are OK, adjust the clutch end plate clearance.

(cont'd)

Symptom Troubleshooting Index (cont'd)

Symptom	Probable cause(s)	Notes
Poor acceleration; Stall speed low	1. Torque converter clutch solenoid valve defective 2. Torque converter one-way clutch defective 3. Engine output low 4. Lock-up clutch piston defective 5. Lock-up shift valve defective 6. Restricted cooler	Check ATF cooling system for restriction.
Engine idle vibration	1. Low ATF level 2. Torque converter clutch solenoid valve defective 3. Drive plate defective or transmission misassembed 4. Engine output low 5. Lock-up clutch piston defective 6. ATF pump worn or binding 7. Lock-up shift valve defective 8. Restricted cooler	• Set idle rpm in gear to the specified idle speed. If still no good, adjust the engine mounts as outlined in the engine section of this service manual. • Check ATF level and check ATF cooler lines for leakage and loose connections. If necessary, flush ATF cooler lines. • Check ATF cooling system for restriction.
Vehicle moves in N position	1. Excessive ATF 2. Foreign material in separator plate orifice 3. 1st clutch defective 4. 2nd clutch defective 5. 3rd clutch defective 6. 4th clutch defective 7. Clutch clearance incorrect 8. Needle bearing seized up, worn, or damaged 9. Thrust washer seized up, worn, or damaged	• Check ATF level, and drain ATF if necessary. • Inspect the clutch piston, clutch piston check valve, and O-rings. Check the spring retainer for wear and damage. Inspect the clutch end plate-to-top disc clearance. If the clearance is out of tolerance, inspect the clutch discs and plates for wear and damage. If the discs and plates are worn or damaged, replace them as a set. If they are OK, adjust the clutch end plate clearance. • Check for clutch pressure in neutral.

Symptom	Probable cause(s)	Notes
Late shift from N position to D4 and D3 positions	1. Shift solenoid valve C defective 2. A/T clutch pressure control solenoid valves A and B defective 3. Shift cable broken or out of adjustment 4. Joint in shift cable and transmission or body worn 5. Shift fork shaft stuck 6. CPC valve A stuck 7. Foreign material in separator plate orifice 8. Shift valve C defective 9. Servo control valve defective 10. 1st accumulator defective 11. 1st check ball stuck 12. 1st clutch defective	• Check the D4 indicator light indication, and check for loose connectors. Inspect the O-ring, and check the shift solenoid valve for seizure. • Inspect the A/T clutch pressure control solenoid valve body gasket and ATF feed pipes for wear and damage. If the A/T clutch pressure control solenoid valve is stuck, inspect the CPC valves. • Check for a loose shift cable on the shift lever and the transmission control shaft. • If the ATF strainer is clogged with particles of steel or aluminum, inspect the ATF pump. If the ATF pump is OK, and no cause for the contamination is found, replace the torque converter. • Check 1st clutch pressure. • Inspect the clutch piston, clutch piston check valve, and O-rings. Check the spring retainer for wear and damage. Inspect the clutch end plate-to-top disc clearance. If the clearance is out of tolerance, inspect the clutch discs and plates for wear and damage. If the discs and plates are worn or damaged, replace them as a set. If they are OK, adjust the clutch end plate clearance.
Late shift from N position to R position	1. Shift solenoid valve C defective 2. A/T clutch pressure control solenoid valves A and B defective 3. Shift cable broken or out of adjustment 4. Joint in shift cable and transmission or body worn 5. Shift fork shaft stuck 6. Foreign material in separator plate orifice 7. Reverse CPC valve defective 8. 4th accumulator defective 9. 4th clutch defective	• Check the D4 indicator light indication, and check for loose connectors. Inspect the O-ring, and check the shift solenoid valve for seizure. • Inspect the A/T clutch pressure control solenoid valve body gasket and ATF feed pipes for wear and damage. If the A/T clutch pressure control solenoid valve is stuck, inspect the CPC valves. • Check for a loose shift cable on the shift lever and the transmission control shaft. • If the ATF strainer is clogged with particles of steel or aluminum, inspect the ATF pump. If the ATF pump is OK, and no cause for the contamination is found, replace the torque converter. • Check 4th clutch pressure. • Inspect the clutch piston, clutch piston check valve, and O-rings. Check the spring retainer for wear and damage. Inspect the clutch end plate-to-top disc clearance. If the clearance is out of tolerance, inspect the clutch discs and plates for wear and damage. If the discs and plates are worn or damaged, replace them as a set. If they are OK, adjust the clutch end plate clearance.

(cont'd)

Symptom Troubleshooting Index (cont'd)

Symptom	Probable cause(s)	Notes
No shift	Modulator valve defective	Measure line pressure.
Erratic shifting gears: Fails to shift in D4 position; does not upshift to 4th	1. Shift solenoid valve A defective 2. Mainshaft speed sensor defective 3. Countershaft speed sensor defective 4. Shift valve A defective 5. Shift valve D defective	• Inspect the O-ring, and check the shift solenoid valve for seizure. • Check the D4 indicator light indication, and check for loose connectors. Inspect the transmission range switch. If the transmission range switch is faulty, replace it. If the transmission range switch is out of adjustment, adjust it and the shift cable.
Erratic shifting gears: Fails to shift in D4 and D3 positions; does not upshift to 3rd and 4th	1. Shift solenoid valve B defective 2. Shift fork shaft stuck 3. Shift valve B defective 4. Servo control valve defective	• Check the D4 indicator light indication, and check for loose connectors. Inspect the O-ring, and check the shift solenoid valve for seizure. • Check for a missing shift fork bolt on the shift fork shaft.
Erratic shifting gears: Fails to shift in D4, D3 and 1 positions; starts off in 3rd	1. Shift solenoid valve B defective 2. Shift valve B defective 3. Shift valve E defective	Check the D4 indicator light indication, and check for loose connectors. Inspect the O-ring, and check the shift solenoid valve for seizure.
Excessive shock, or flares on all upshifts and downshifts	1. A/T clutch pressure control solenoid valves A and B defective 2. CPC valve A defective 3. CPC valve B defective 4. Foreign material in separator plate orifice	• Check the D4 indicator light indication, and check for loose connectors. Inspect the A/T clutch pressure control solenoid valve body gasket and ATF feed pipes for wear and damage. If the A/T clutch pressure control solenoid valve is stuck, inspect the CPC valves. • If the ATF strainer is clogged with particles of steel or aluminum, inspect the ATF pump. If the ATF pump is OK, and no cause for the contamination is found, replace the torque converter.
Excessive shock or flares on 1-2 upshift or 2-1 downshift	1. Shift solenoid valve C defective 2. 2nd clutch pressure switch defective 3. Foreign material in separator plate orifice 4. Shift valve C defective 5. 1st accumulator defective 6. 2nd accumulator defective 7. 1st check ball stuck 8. 2nd check ball stuck 9. 1st clutch defective 10. 2nd clutch defective	• Check the D4 indicator light indication, and check for loose connectors. Inspect the O-rings, and check the shift solenoid valve for seizure. • Check the D4 indicator light indication, and check for loose connectors. Check that the outlet is not clogged inside of the connector. • Check 1st and 2nd clutch pressures. • Inspect the clutch piston and O-rings. Check the spring retainer for wear and damage. Inspect the clutch end plate-to-top disc clearance. If the clearance is out of tolerance, inspect the clutch discs and plates for wear and damage. If the discs and plates are worn or damaged, replace them as a set. If they are OK, adjust the clutch end plate clearance.

Symptom	Probable cause(s)	Notes
Excessive shock, or flares on 2-3 upshift or 3-2 downshift	1. Shift solenoid valve C defective 2. 3rd clutch pressure switch defective 3. Foreign material in separator plate orifice 4. Shift valve C defective 5. 2nd accumulator defective 6. 3rd accumulator defective 7. 2nd check ball stuck 8. 2nd clutch defective 9. 3rd clutch defective	• Check the D4 indicator light indication, and check for loose connectors. Inspect the O-rings, and check the shift solenoid valve for seizure. • Check 2nd and 3rd clutch pressures. • Inspect the clutch piston, clutch piston check valve, and O-rings. Check the spring retainer for wear and damage. Inspect the clutch end plate-to-top disc clearance. If the clearance is out of tolerance, inspect the clutch discs and plates for wear and damage. If the discs and plates are worn or damaged, replace them as a set. If they are OK, adjust the clutch end plate clearance.
Excessive shock, or flares on 3-4 upshift or 4-3 downshift	1. Shift solenoid valve C defective 2. Foreign material in separator plate orifice 3. Shift valve C defective 4. 3rd accumulator defective 5. 4th accumulator defective 6. 3rd clutch defective 7. 4th clutch defective	• Check the D4 indicator light indication, and check for loose connectors. Inspect the O-rings, and check the shift solenoid valve for seizure. • Check 3rd and 4th clutch pressures. • If the ATF strainer is clogged with particles of steel or aluminum, inspect the ATF pump. If the ATF pump is OK, and no cause for the contamination is found, replace the torque converter, and check the stall speed. • Inspect the clutch piston, clutch piston check valve, and O-rings. Check the spring retainer for wear and damage. Inspect the clutch end plate-to-top disc clearance. If the clearance is out of tolerance, inspect the clutch discs and plates for wear and damage. If the discs and plates are worn or damaged, replace them as a set. If they are OK, adjust the clutch end plate clearance.
Noise from transmission in all shift lever positions	1. ATF pump worn or binding 2. Torque converter housing or transmission housing bearing worn or damaged	• Improper alignment of ATF pump and torque converter housing may cause ATF pump seizure. The symptoms are mostly an rpm-ticking noise or a high pitched squeak. • Inspect the contact of the countershaft and secondary shaft with the bearings. Check the ATF guide plates for damage and wear. Inspect the 1st clutch feed pipe for damage and out of round. If the 1st clutch feed pipe is damaged or out of round, replace it. Replace the secondary shaft if the bushing for the 1st clutch feed pipe is damaged or out of round.
Vehicle does not accelerate more than 31 mph (50 km/h)	Torque converter one-way clutch defective	Replace torque converter.

(cont'd)

Symptom Troubleshooting Index (cont'd)

Symptom	Probable cause(s)	Notes
Vibration in all shift lever positions	Drive plate defective or transmission misassembled	• Set idle rpm in gear to the specified idle speed. If still no good, adjust the engine mounts as outlined in the engine section of the service manual. • Check the stall speed.
Shift lever does not operate smoothly	1. A/T gear position switch defective or out of adjustment 2. Shift cable broken or out of adjustment 3. Joint in shift cable and transmission or body worn	• Check the D4 indicator light indication, and check for loose connectors. Inspect the transmission range switch. If the transmission range switch is faulty, replace it. If the transmission range switch is out of adjustment, adjust it and the shift cable. • Check for a loose shift cable on the shift lever and the transmission control shaft.
Transmission does not shift into P position	1. Shift cable broken or out of adjustment 2. Joint in shift cable and transmission or body worn 3. Park mechanism defective	• Check for a loose shift cable on the shift lever and the transmission control shaft. • Check the park pawl spring installation and the park lever spring installation. If installation is incorrect, install the spring correctly. Make sure that the park lever stop is not installed upside down. Check the distance between the park pawl and the park lever roller pin. If the distance is out of tolerance, adjust the distance with the park lever stop.
Lock-up clutch does not disengage	1. Torque converter clutch solenoid valve defective 2. A/T clutch pressure control solenoid valves A and B defective 3. Lock-up clutch piston defective 4. Lock-up shift valve defective 5. Lock-up control valve defective 6. Lock-up timing valve defective 7. Restricted cooler	• Check the D4 indicator light indication, and check for loose connectors. Inspect the A/T clutch pressure control solenoid valve body gasket and ATF feed pipes for wear and damage. If the A/T clutch pressure control solenoid valve is stuck, inspect the CPC valves. • Check ATF cooling system for restriction.

Symptom	Probable cause(s)	Notes
Lock-up clutch does not operate smoothly	1. Torque converter clutch solenoid valve defective 2. A/T clutch pressure control solenoid valves A and B defective 3. Lock-up clutch piston defective 4. Torque converter check valve defective 5. Lock-up shift valve defective 6. Lock-up control valve defective 7. Lock-up timing valve defective	• Check the D4 indicator light indication, and check for loose connectors. Inspect the A/T clutch pressure control solenoid valve body gasket and ATF feed pipes for wear and damage. If the A/T clutch pressure control solenoid valve is stuck, inspect the CPC valves. • Center all engine mounts.
Lock-up clutch does not engage	1. Torque converter clutch solenoid valve defective 2. A/T clutch pressure control solenoid valves A and B defective 3. Mainshaft speed sensor defective 4. Countershaft speed sensor defective 5. Lock-up clutch piston defective 6. Torque converter check valve defective 7. Lock-up shift valve defective 8. Lock-up control valve defective	Check the D4 indicator light indication, and check for loose connectors. Inspect the A/T clutch pressure control solenoid valve body gasket and ATF feed pipes for wear and damage. If the A/T clutch pressure control solenoid valve is stuck, inspect the CPC valves.
A/T gear position indicator does not indicate shift lever positions	1. Transmission range switch defective or out of adjustment 2. Shift cable broken or out of adjustment 3. Joint in shift cable and transmission or body worn	• Check the D4 indicator light indication, and check for loose connectors. Inspect the transmission range switch. If the transmission range switch is faulty, replace it. If the transmission range switch is out of adjustment, adjust it and the shift cable. • Check for a loose shift cable on the shift lever and the transmission control shaft.
Speedometer does not operate	Countershaft speed sensor defective	Check the D4 indicator light indication, and check for loose connectors.

Automatic Transmission

System Description

General Operation

The automatic transmission is a combination of a 3-element torque converter and triple-shaft electronically controlled automatic transmission which provides 4 speeds forward and 1 reverse. The entire unit is positioned in line with the engine.

Torque Converter, Gears, and Clutches

The torque converter consists of a pump, turbine, and stator assembly in a single unit. They are connected to the engine crankshaft so they turn together as a unit as the engine turns. Around the outside of the torque converter is a ring gear which meshes with the starter pinion when the engine is being started. The entire torque converter assembly serves as a flywheel transmitting power to the transmission mainshaft. The transmission has three parallel shafts: the mainshaft, the countershaft, and the secondary shaft. The mainshaft is in line with the engine crankshaft. The mainshaft includes the 3rd and 4th clutches, and gears for 3rd, 4th, reverse, and idler (reverse gear is integral with the 4th gear). The countershaft includes the final drive, 1st, 3rd, 4th, reverse, 2nd, park, and idler gears (the final drive gear is integral with the countershaft). The secondary shaft includes the 1st and 2nd clutches, and gears for 1st, 2nd and idler. The countershaft 4th gear and the countershaft reverse gear can be locked to the countershaft at its center, providing 4th gear or reverse, depending with which way the selector moved. The gears on the mainshaft and the secondary shaft are in constant mesh with those on the countershaft. When certain combinations of gears in the transmission are engaged by the clutches, power is transmitted from the mainshaft and the secondary shaft to the countershaft to provide D4, D3, 2, 1 and R positions.

Electronic Control

The electronic control system consists of the Powertrain Control Module (PCM), sensors, and six solenoid valves. Shifting and lock-up are electronically controlled for comfortable driving under all conditions. The PCM is located below the dashboard, under the front lower panel behind the center console.

Hydraulic Control

The valve bodies include the main valve body, the regulator valve body, the servo body, and the accumulator body. They are bolted to the torque converter housing. The main valve body contains the manual valve, the modulator valve, the shift valve C, the shift valve D, the shift valve E, the servo control valve, the torque converter check valve, the reverse CPC valve, the lock-up shift valve, the relief valve, the cooler check valve, and the ATF pump gears. The regulator valve body contains the regulator valve, the lock-up timing valve, and the lock-up control valve. The servo body contains the servo valve, the shift valve A, the shift valve B, the CPC valves A and B, and 3rd and 4th accumulators. The accumulator body contains the 1st and 2nd accumulators and lubrication check valve. Fluid from the regulator passes through the manual valve to the various control valves. The 1st, 3rd, and 4th clutches receive fluid from their respective feed pipes, and the 2nd clutch receives fluid from the internal hydraulic circuit.

Shift Control Mechanism

The PCM controls shift solenoid valves A, B, and C, and A/T clutch pressure control solenoid valves A and B while receiving input signal from various sensors located throughout the vehicle. The shift solenoid valves shift the positions of the shift valves to switch the port leading hydraulic pressure to the clutch. The A/T clutch pressure control solenoid valves A and B control the CPC valves A and B to shift smoothly between lower gear and higher gear. This pressurizes a line to one of the clutches, engaging the clutch and its corresponding gear.

Lock-up Mechanism

In D4 position (3rd and 4th), and D3 position (3rd), pressurized fluid is drained from the back of the torque converter through a fluid passage, causing the lock-up piston to be held against the torque converter cover. As this takes place, the mainshaft rotates at the same speed as the engine crankshaft. Together with hydraulic control, the PCM optimizes the timing of the lock-up mechanism. When the torque converter clutch solenoid valve activates, modulator pressure changes to switch lock-up on and off. The lock-up control valve and the lock-up timing valve control the range of lock-up according to A/T clutch pressure control solenoid valves A and B. The torque converter clutch solenoid valve is mounted on the torque converter housing, and A/T clutch pressure control solenoid valves A and B are mounted on the transmission housing. They are all controlled by the PCM.

Gear Selection
The shift lever has seven positions: P PARK, R REVERSE, N NEUTRAL, D4 1st through 4th gear ranges, D3 1st through 3rd gear ranges, 2 2nd gear, and 1 1st gear.

Position	Description
P PARK	Front wheels locked; park pawl engaged with park gear on countershaft. All clutches released.
R REVERSE	Reverse; reverse selector engaged with countershaft reverse gear and 4th clutch locked.
N NEUTRAL	All clutches released.
D4 DRIVE (1st through 4th)	General driving; starts off in 1st, shifts automatically to 2nd, 3rd, then 4th, depending on vehicle speed and throttle position. Downshift through 3rd, 2nd, and 1st on deceleration to stop. The lock-up mechanism operates in 3rd and 4th gears.
D3 DRIVE (1st through 3rd)	Used for rapid acceleration at highway speeds and general driving; up-hill and down-hill driving; starts off in 1st, shifts automatically to 2nd, then 3rd, depending on vehicle speed and throttle position. Downshifts through 2nd to 1st on deceleration to stop. The lock-up mechanism operates in 3rd gear.
2 SECOND	Used for engine braking or better traction starting off on loose or slippery surfaces; stays in 2nd gear; does not shift up or down.
1 FIRST	Used for engine braking; stays in 1st gear; does not shift up.

Starting is possible only in P and N positions through the use of a slide-type, neutral-safety switch.

Automatic Transaxle (A/T) Gear Position Indicator
The A/T gear position indicator in the instrument panel shows which gear has been selected without having to look down at the console.

(cont'd)

System Description (cont'd)

Clutches

The four-speed automatic transmission uses hydraulically-actuated clutches to engage or disengage the transmission gears. When hydraulic pressure is introduced into the clutch drum, the clutch piston moves. This presses the friction discs and steel plates together, locking them so they don't slip. Power is then transmitted through the engaged clutch pack to its hub-mounted gear. Likewise, when the hydraulic pressure is bled from the clutch pack, the piston releases the friction discs and the steel plates, and they are free to slide past each other. This allows the gear to spin independently on its shaft, transmitting no power.

1st Clutch
The 1st clutch engages/disengages 1st gear, and is located at the middle of the secondary shaft. The 1st clutch is joined back-to-back to the 2nd clutch. The 1st clutch is supplied hydraulic pressure by its ATF feed pipe within the secondary shaft.

2nd Clutch
The 2nd clutch engages/disengages 2nd gear, and is located at the middle of the secondary shaft. The 2nd clutch is joined back-to-back to the 1st clutch. The 2nd clutch is supplied hydraulic pressure through the secondary shaft by a circuit connected to the internal hydraulic circuit.

3rd Clutch
The 3rd clutch engages/disengages 3rd gear, and is located at the middle of the mainshaft. The 3rd clutch is joined back-to-back to the 4th clutch. The 3rd clutch is supplied hydraulic pressure by its ATF feed pipe within the mainshaft.

4th Clutch
The 4th clutch engages/disengages 4th gear, as well as reverse gear, and is located at the middle of the mainshaft. The 4th clutch is joined back-to-back to the 3rd clutch. The 4th clutch is supplied hydraulic pressure by its ATF feed pipe within the mainshaft.

Transmission Sectional View

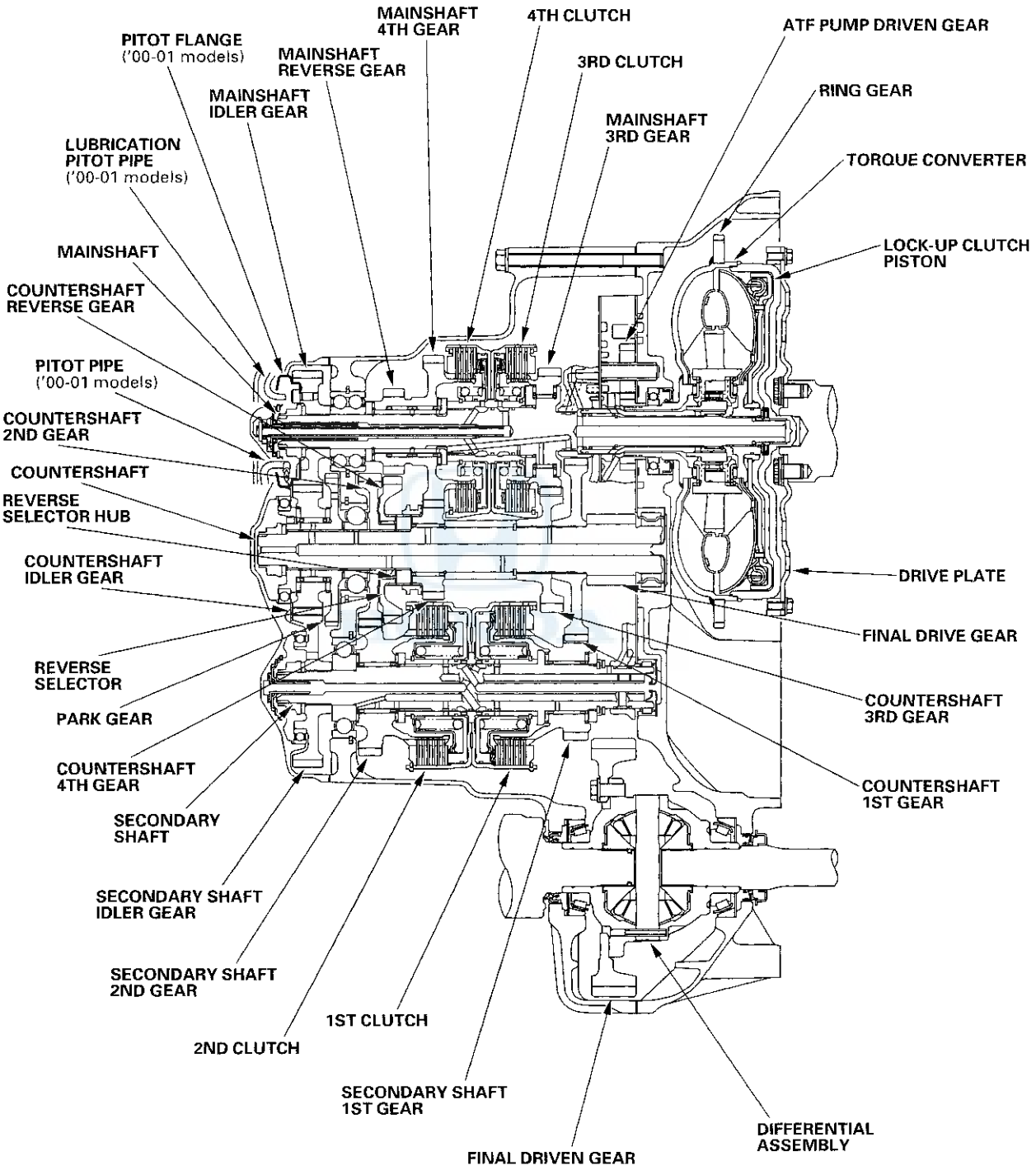

(cont'd)

System Description (cont'd)

Power Flow

POSITION		PART							
		TORQUE CONVERTER	1ST GEAR 1ST CLUTCH	2ND GEAR 2ND CLUTCH	3RD GEAR 3RD CLUTCH	4TH GEAR	4TH CLUTCH	REVERSE GEAR	PARK GEAR
P		○	×	×	×	×	×	×	○
R		○	×	×	×	×	○	○	×
N		○	×	×	×	×	×	×	×
D4	1ST	○	○	×	×	×	×	×	×
	2ND	○	×	○	×	×	×	×	×
	3RD	○	×	×	○	×	×	×	×
	4TH	○	×	×	×	○	○	×	×
D3	1ST	○	○	×	×	×	×	×	×
	2ND	○	×	○	×	×	×	×	×
	3RD	○	×	×	○	×	×	×	×
2		○	×	○	×	×	×	×	×
1		○	○	×	×	×	×	×	×

○:Operates
×:Doesn't operate

Gear Operation

Gears on the mainshaft:

- The 3rd gear is engaged/disengaged with the mainshaft by the 3rd clutch.
- The 4th gear is engaged/disengaged with the mainshaft by the 4th clutch.
- The reverse gear is engaged/disengaged with the mainshaft by the 4th clutch.
- The idler gear is splined with the mainshaft and rotates with the mainshaft.

Gears on the countershaft

- The final drive gear is integral with the countershaft.
- The 1st gear, 3rd gear, 2nd gear, and park gear are splined with the countershaft and rotate with the countershaft.
- The 4th gear and reverse gear rotate freely from the countershaft. The reverse selector engages the 4th gear or the reverse gear with the reverse selector hub. The reverse selector hub is splined with the countershaft so that the 4th gear or reverse gear engage with the countershaft.
- The idler gear rotates freely from the countershaft.

Gears on the secondary shaft

- The 1st gear is engaged/disengaged with the secondary shaft by the 1st clutch.
- The 2nd gear is engaged/disengaged with the secondary shaft by the 2nd clutch.
- The idler gear is splined with the secondary shaft and rotates with the secondary shaft.

P Position
Hydraulic pressure is not applied to the clutches. Power is not transmitted to the countershaft. The countershaft is locked by the park pawl interlocking the park gear.

N Position
Engine power transmitted from the torque converter drives the mainshaft idler gear, the countershaft idler gear, and the secondary shaft idler gear, but hydraulic pressure is not applied to the clutches. Power is not transmitted to the countershaft. The countershaft 4th gear is engaged with the reverse selector hub and the countershaft by the reverse selector, when the shift lever is shifted in N position from D4 position. The countershaft reverse gear is engaged when shifted from R position.

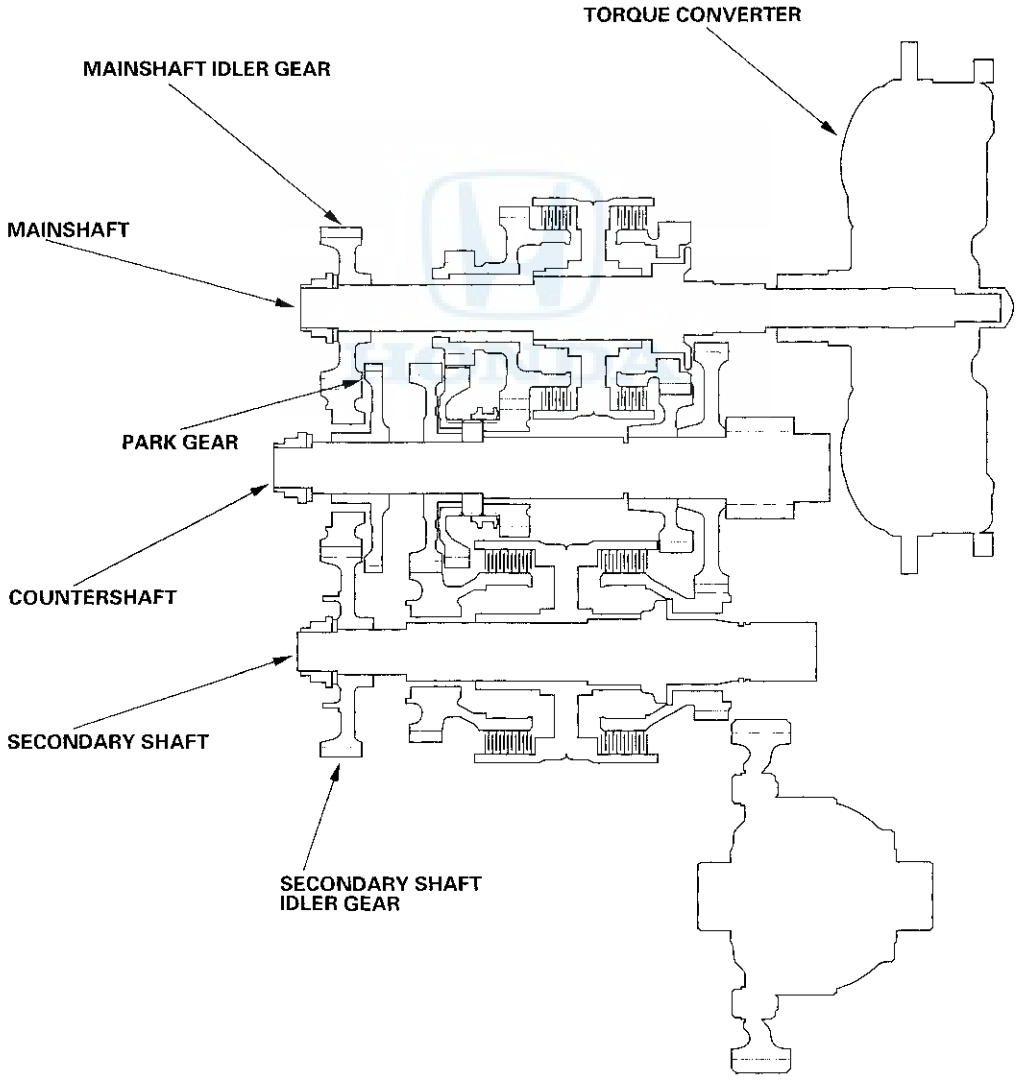

(cont'd)

System Description (cont'd)

Power Flow (cont'd)

In D4 or D3 position, the optimum gear is automatically selected from the 1st, 2nd, 3rd and 4th gears, according to conditions such as the balance between the throttle opening (engine loading) and vehicle speed.

D4 or D3 Position in 1st gear and 1 Position

- Hydraulic pressure is applied to the 1st clutch, then the 1st clutch engages the secondary shaft 1st gear with the secondary shaft.
- The mainshaft idler gear drives the secondary shaft via the countershaft idler gear and secondary shaft idler gear.
- The secondary shaft 1st gear drives the countershaft 1st gear and the countershaft.
- Power is transmitted to the final drive gear, which in turn drives the final driven gear.

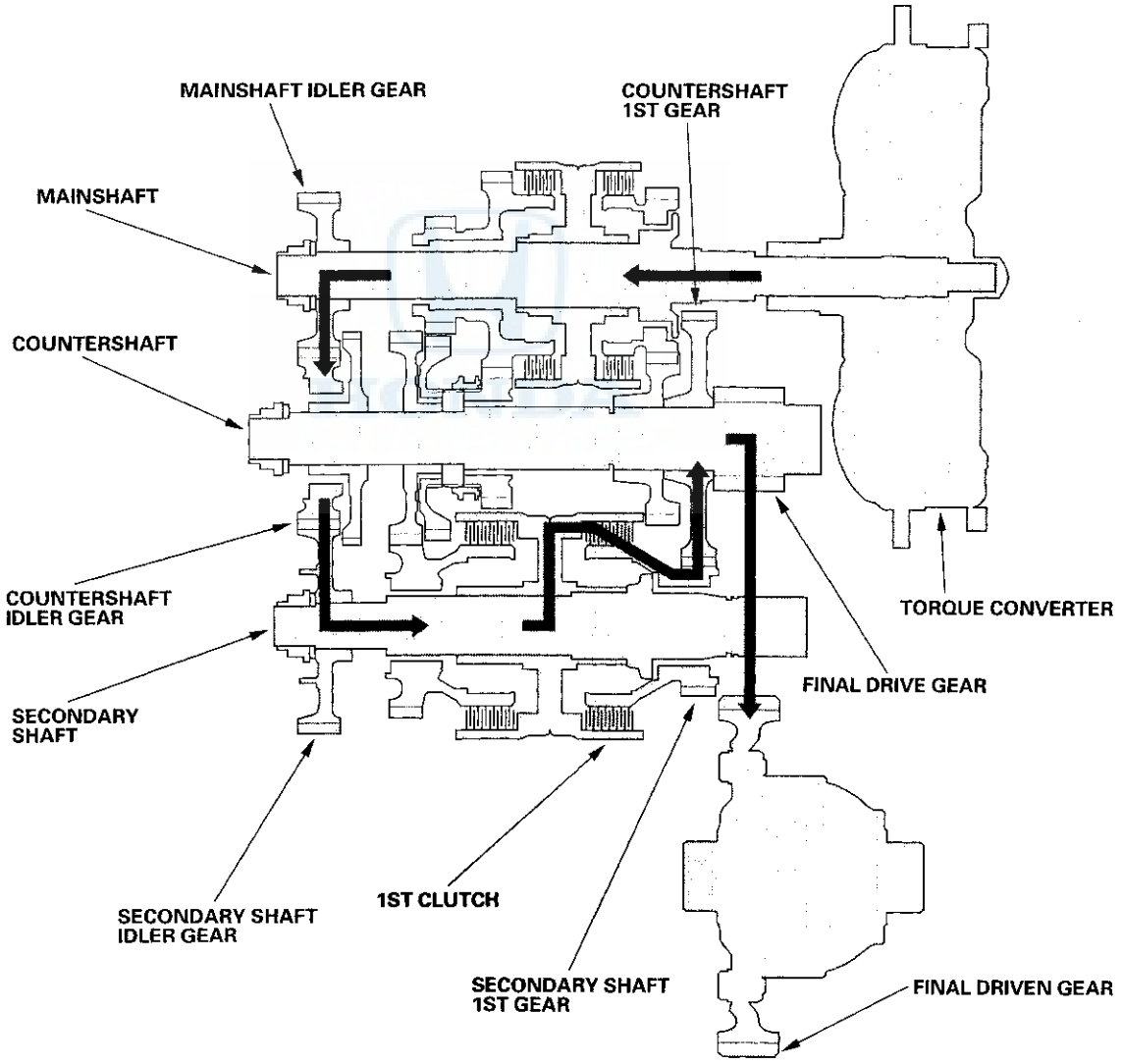

D4 or D3 Position in 2nd gear and 2 Position

- Hydraulic pressure is applied to the 2nd clutch, then the 2nd clutch engages the secondary shaft 2nd gear with the secondary shaft.
- The mainshaft idler gear drives the secondary shaft via the countershaft idler gear and secondary shaft idler gear.
- The secondary shaft 2nd gear drives the countershaft 2nd gear and the countershaft.
- Power is transmitted to the final drive gear, which in turn drives the final driven gear.

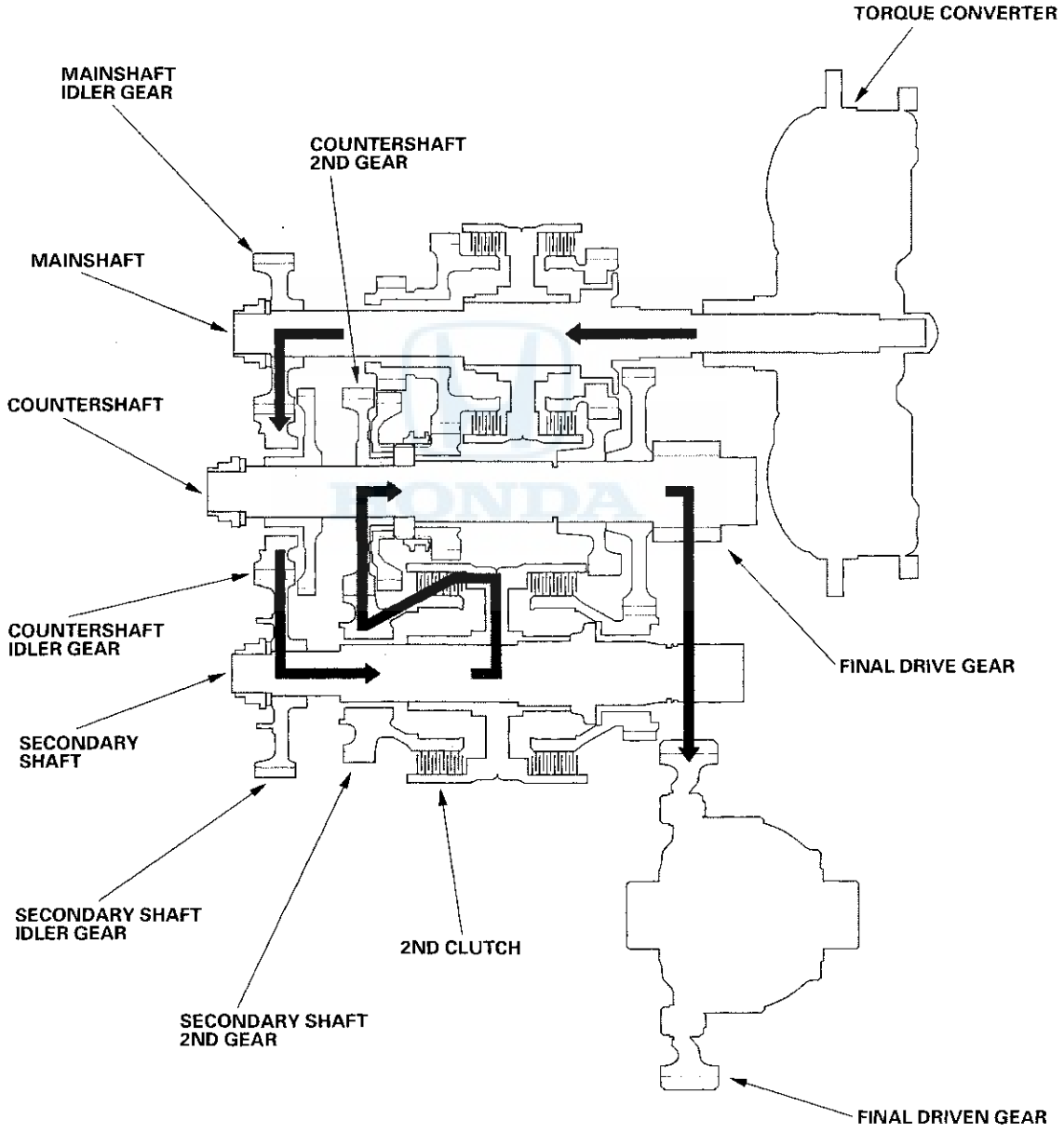

(cont'd)

System Description (cont'd)

Power Flow (cont'd)

D4 or D3 Position in 3rd gear

- Hydraulic pressure is applied to the 3rd clutch, then the 3rd clutch engages the mainshaft 3rd gear with the mainshaft.
- The mainshaft 3rd gear drives the countershaft 3rd gear and the countershaft.
- Power is transmitted to the final drive gear, which in turn drives the final driven gear.

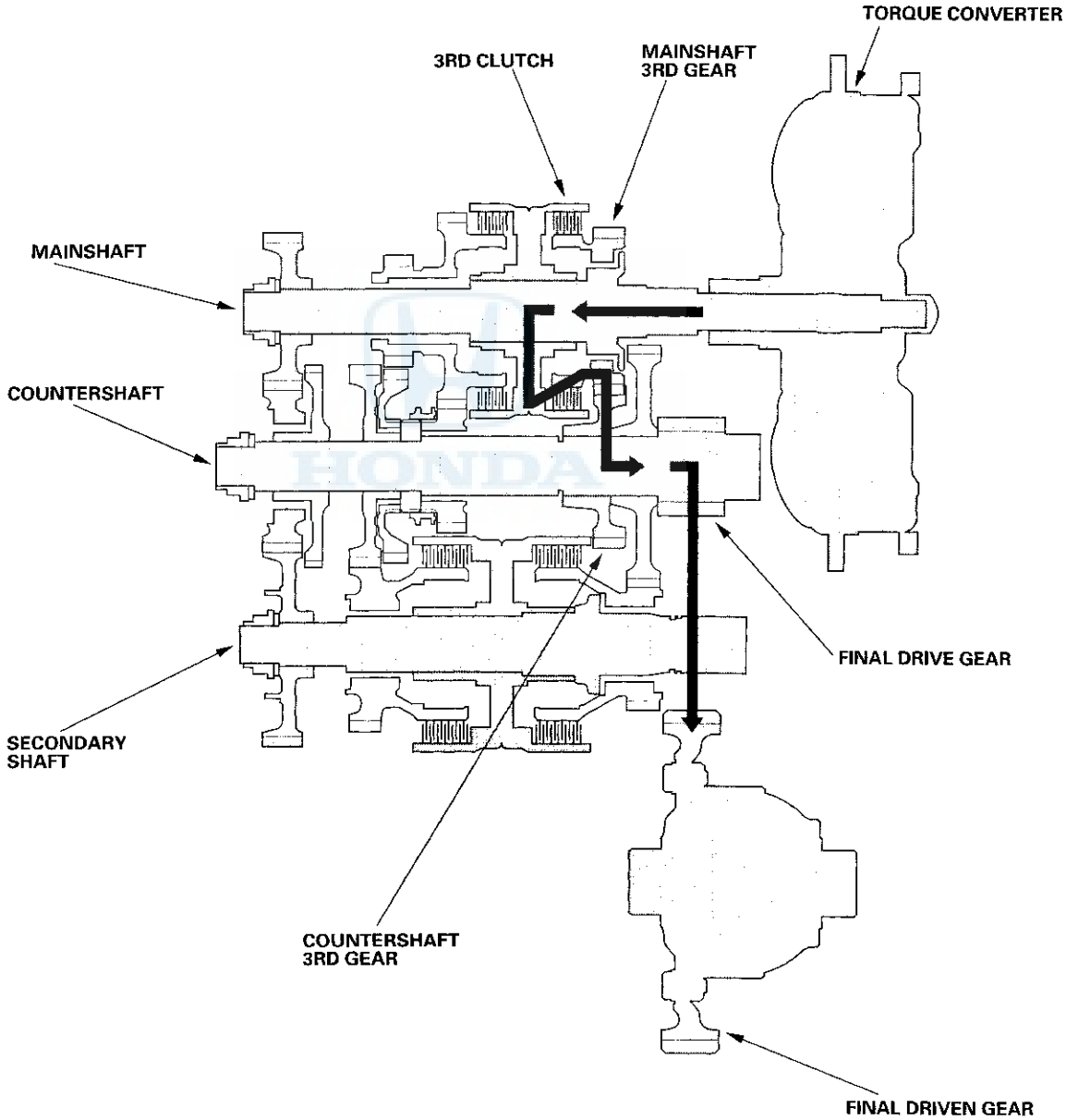

D4 Position in 4th gear

- Hydraulic pressure is applied to the servo valve to engage the reverse selector with the countershaft 4th gear while the shift lever is in the forward range (D4, D3, 2 and 1 position).
- Hydraulic pressure is also applied to the 4th clutch, then the 4th clutch engages the mainshaft 4th gear with the mainshaft.
- The mainshaft 4th gear drives the countershaft 4th gear, which drives the reverse selector hub and the countershaft.
- Power is transmitted to the final drive gear, which in turn drives the final driven gear.

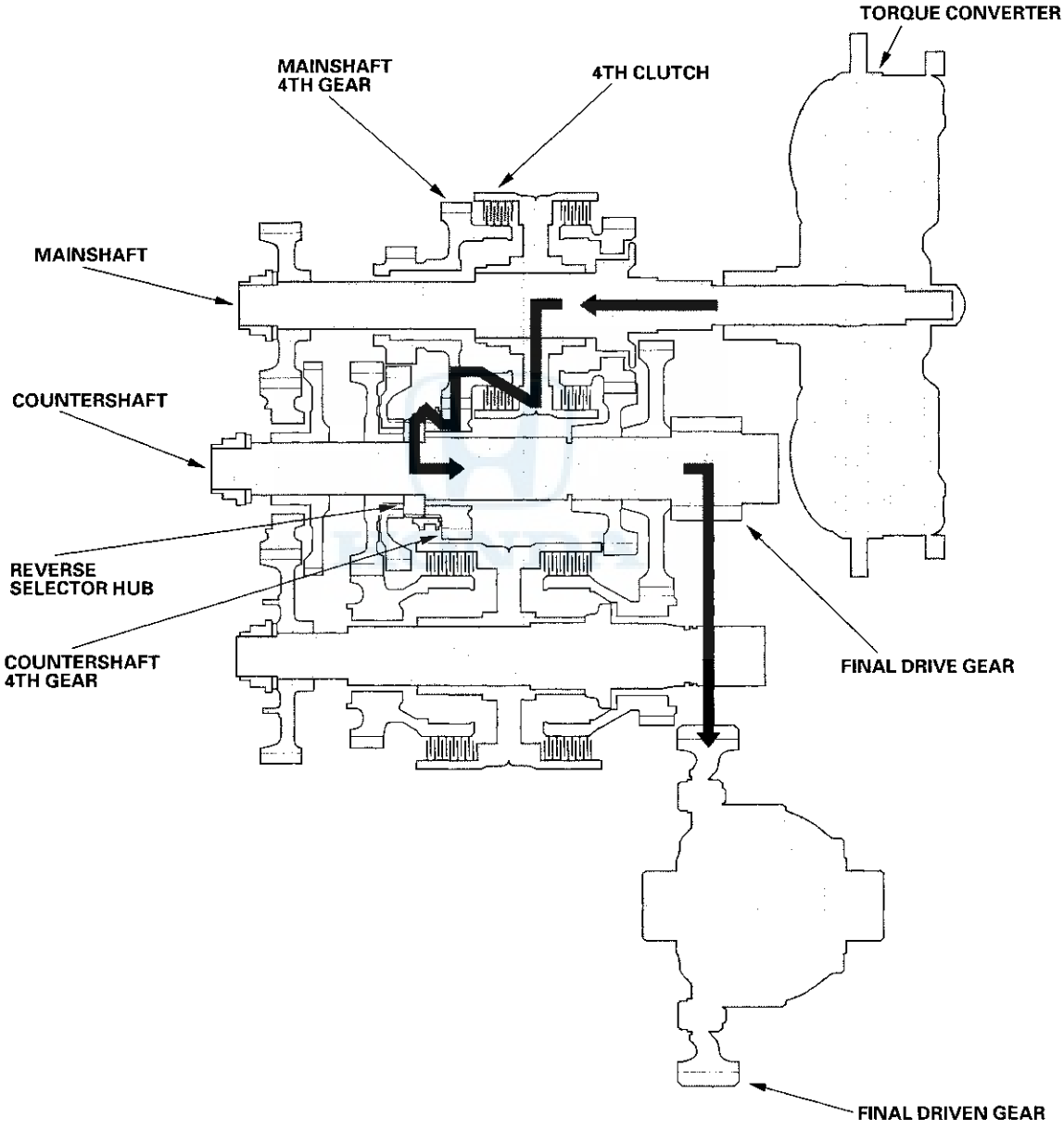

(cont'd)

System Description (cont'd)

Power Flow (cont'd)

R Position

- Hydraulic pressure is applied to the servo valve to engage the reverse selector with the countershaft (reverse gear while the shift lever is in the R position).
- Hydraulic pressure is also applied to the 4th clutch, then the 4th clutch engages the mainshaft reverse gear with the mainshaft.
- The mainshaft reverse gear drives the countershaft reverse gear via the reverse idler gear.
- The rotation direction of the countershaft reverse gear is changed via the reverse idler gear.
- The countershaft reverse gear drives the countershaft via the reverse selector which drives the reverse selector hub.
- Power is transmitted to the final drive gear, which in turn drives the final driven gear.

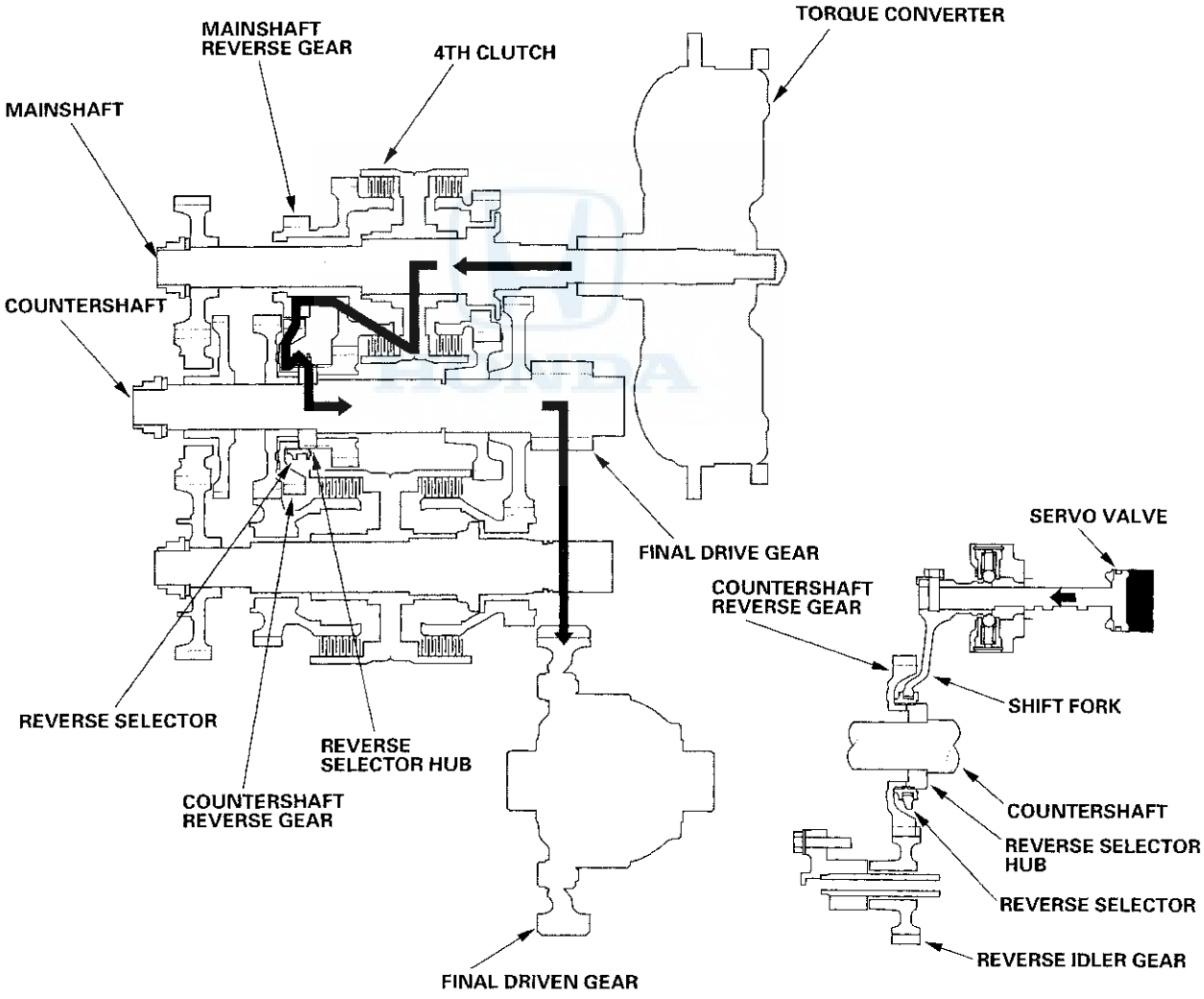

Electronic Control System

Functional Diagram

The electronic control system consists of the Powertrain Control Model (PCM), sensors, and six solenoid valves. Shifting and lock-up are electronically controlled for comfortable driving under all conditions. The PCM is located below the dashboard, under the front lower panel behind the center console.

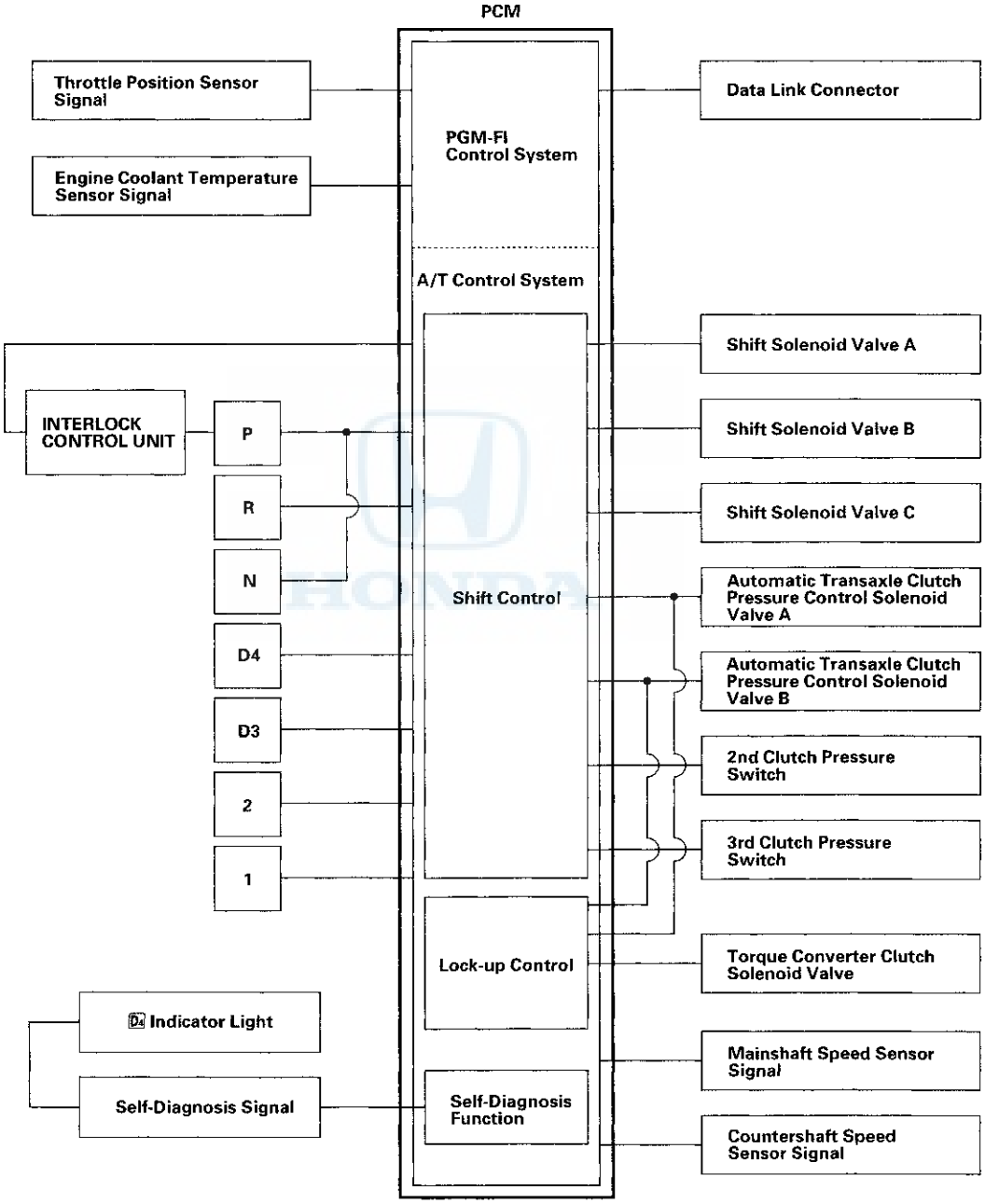

(cont'd)

System Description (cont'd)

Electronic Control System (cont'd)

Electronic Controls Location

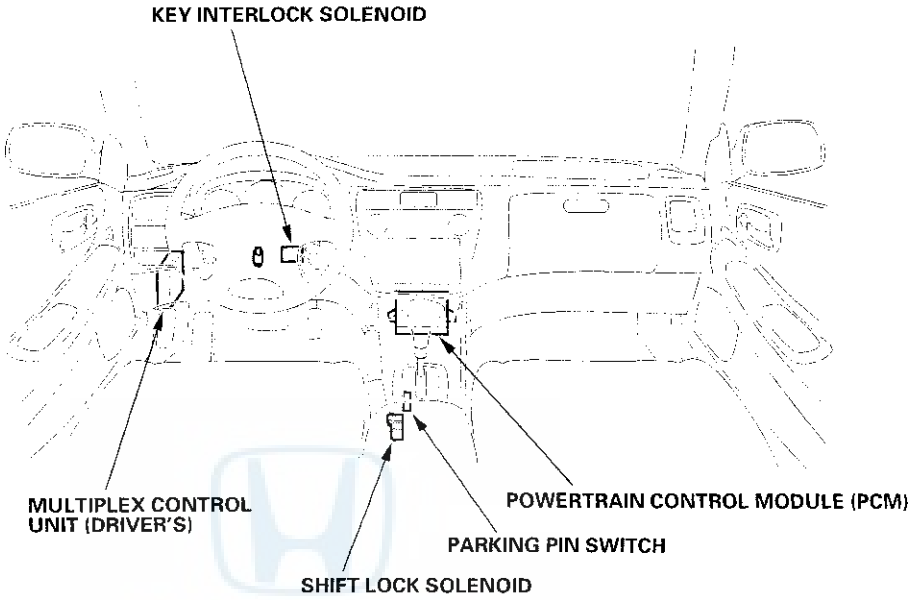

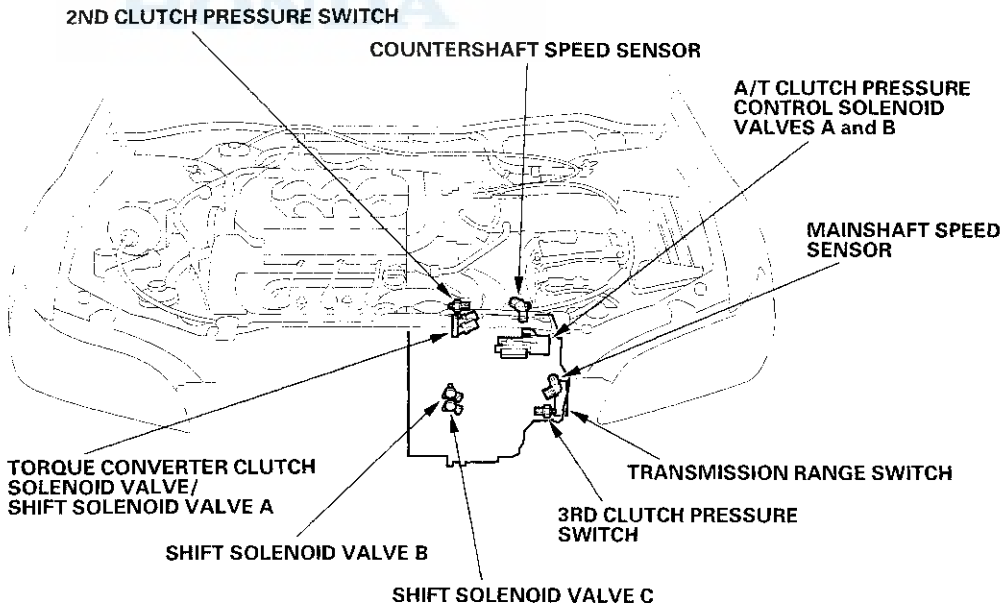

Shift Control

Shifting is related to engine torque through the solenoid valves, which are controlled by the PCM. The PCM instantly determines which gear should be selected by various signals sent from sensors, and actuates the shift solenoid valves A, B, and C to control shifting. Also, a Grade Logic Control System to controls shifting in D4 and D3 positions while the vehicle is ascending or descending a slope, or reducing speed.

The combination of driving signals to shift solenoid valves A, B, and C is shown in the table below.

Position	Gear position	Shift solenoid valves		
		A	B	C
D4, D3	Shifting from N position	ON	ON	ON
	Stays in 1st	OFF	ON	ON
	Shifting gears between 1st and 2nd	ON	ON	ON
	Stays in 2nd	ON	ON	OFF
	Shifting gears between 2nd and 3rd	ON	OFF	OFF
	Stays in 3rd	ON	OFF	ON
D4	Shifting gears between 3rd and 4th	OFF	OFF	ON
	Stays in 4th	OFF	OFF	OFF
2	2nd	ON	ON	OFF
1	1st	OFF	ON	ON
R	Shifting from P and N position	OFF	ON	ON
	Stays in reverse	OFF	ON	OFF
	Reverse inhibit	OFF	ON	ON
P	Park	OFF	ON	OFF
N	Neutral	OFF	ON	OFF

NOTE: For a description of the reverse inhibit mode, refer to page 14-56.

Lock-up Control

The torque converter clutch solenoid valve controls modulator pressure to switch the lock-up shift valve and lock-up ON and OFF. The PCM controls the torque converter clutch solenoid valve and the A/T clutch pressure control solenoid valves A and B. When the torque converter clutch solenoid valve is turned ON, the condition of lock-up starts. The A/T clutch pressure control solenoid valves A and B regulate A/T clutch pressure control solenoid pressure, and apply the pressure to the lock-up control valve and the lock-up timing valve. The lock-up control mechanism operates in 3rd, and 4th gear in D4 and in 3rd gear in D3 positions.

(cont'd)

System Description (cont'd)

Electronic Control System (cont'd)

Grade Logic Control System

How it works:
The PCM compares actual driving conditions with memorized driving conditions, based on the input from the countershaft speed sensor, the throttle position sensor, the engine coolant temperature sensor, the brake pedal position switch signal, and the shift level position signal, to control shifting while the vehicle is ascending or descending a slope, or reducing speed.

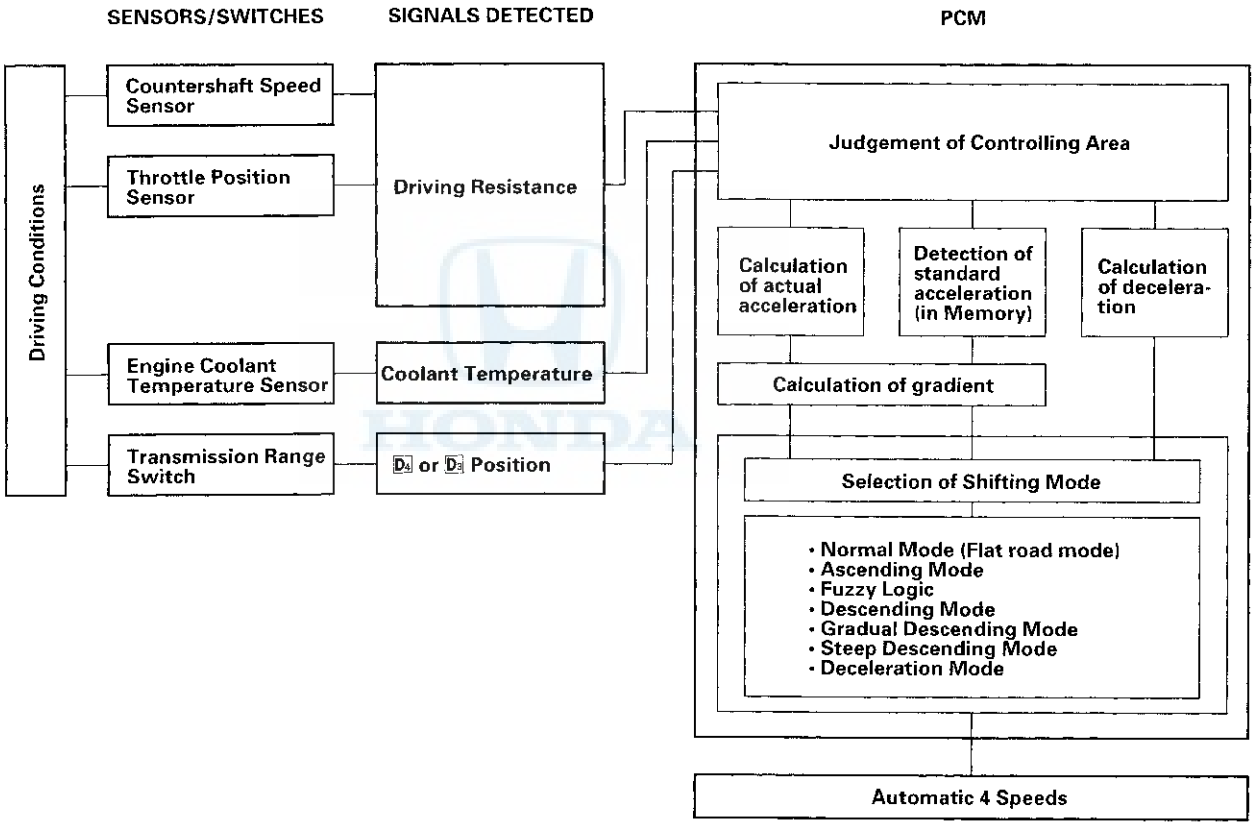

Ascending Control

When the PCM determines that the vehicle is climbing a hill in D4 and D3 positions, the system extends the engagement area of 2nd gear and 3rd gear to prevent the transmission from frequently shifting between 2nd and 3rd gears, and between 3rd and 4th gears, so the vehicle can run smooth and have more power when needed.

NOTE:
- Shift schedules stored in the PCM between 2nd and 3rd gears, and between 3rd and 4th gears, enable the PCM's fuzzy logic to automatically select the most suitable gear according to the magnitude of a gradient.
- Fuzzy logic is a form of artificial intelligence that lets computers respond to changing conditions much like a human mind would.

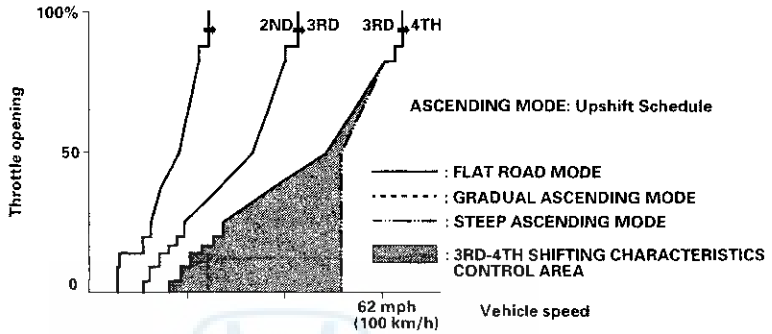

Descending Control

When the PCM determines that the vehicle is going down a hill in D4 and D3 positions, the shift-up speed from 3rd to 4th gear and from 2nd to 3rd (when the throttle is closed) becomes faster than the set speed for flat road driving to widen the 3rd gear and 2nd gear driving areas. This, in combination with engine braking from the deceleration lock-up, achieves smooth driving when the vehicle is descending. There are two descending modes with different 3rd gear driving areas and 2nd gear driving areas according to the magnitude of a gradient stored in the PCM. When the vehicle is in 4th gear, and you are decelerating when you are applying the brakes on a steep hill, the transmission will downshift to 3rd gear. When you accelerate, the transmission will then return to higher gear.

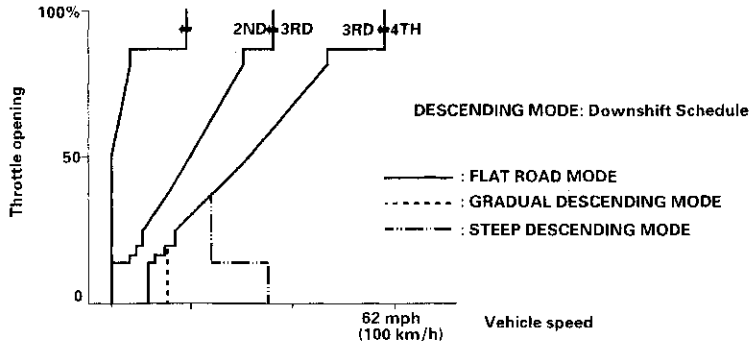

Deceleration Control

When the vehicle goes around a corner and needs to decelerate first and then accelerate, the PCM sets the data for deceleration control to reduce the number of times the transmission shifts. When the vehicle is decelerating from speeds above 27 mph (43 km/h), the PCM shifts the transmission from 4th to 2nd earlier than normal to cope with upcoming acceleration.

(cont'd)

System Description (cont'd)

Electronic Control System (cont'd)

PCM Electrical Connections

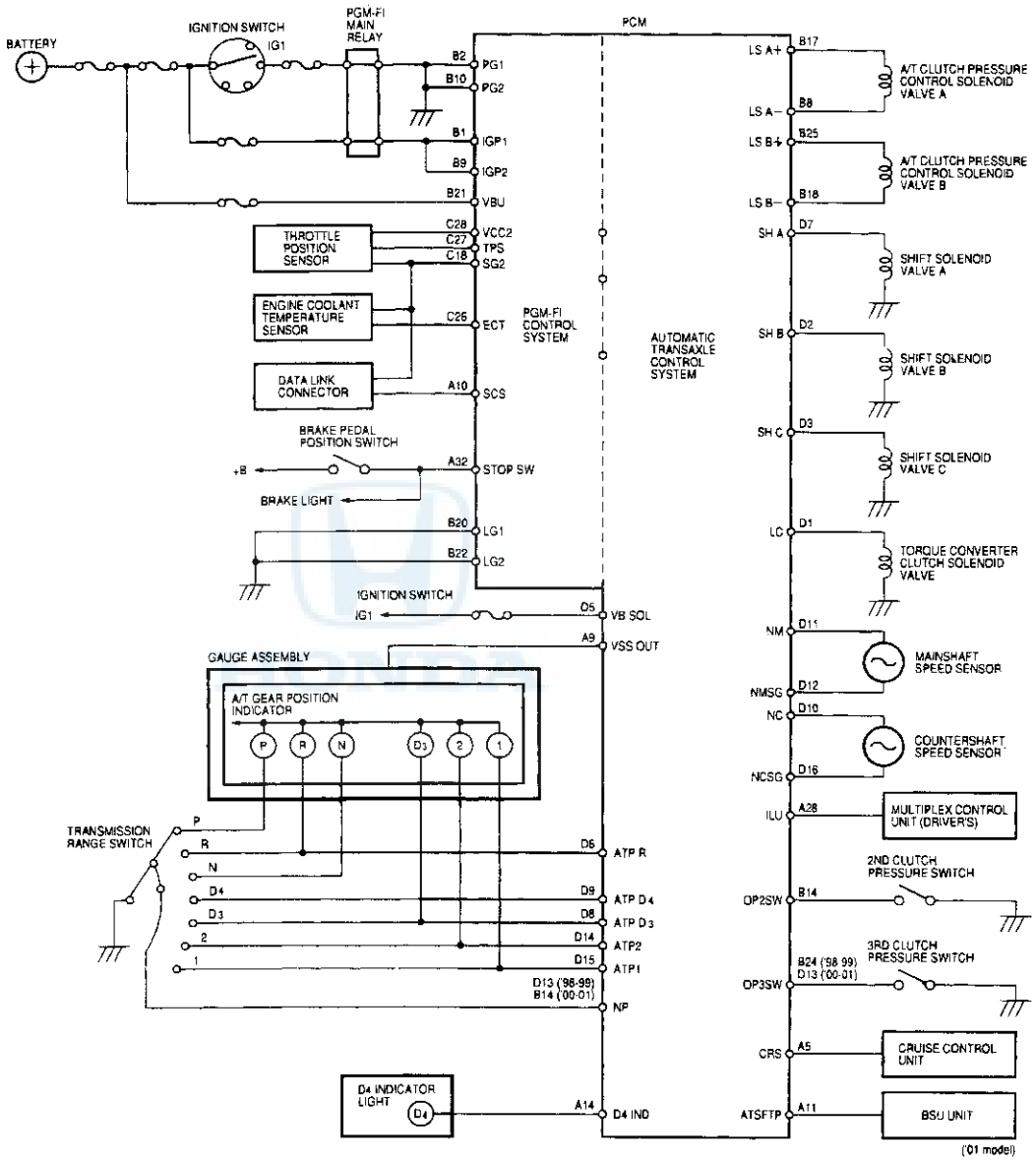

PCM Inputs and Outputs

The PCM terminal voltage and measuring conditions are shown for the connector terminals related to the A/T control system. The other PCM terminal voltage and measuring conditions are described in section 11.

PCM Connector Terminal Locations

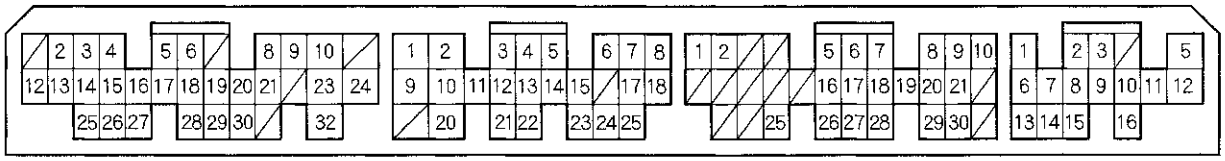

PCM CONNECTOR A (32P)

Terminal Number	Wire	Signal	Description	Measuring Conditions/Terminal Voltage
A5	BLU/GRN	CRS	Downshift signal input from cruise control unit	When cruise control is used: Pulsing signal
A9	BLU/WHT	VSSOUT	Vehicle speed signal detected from countershaft speed sensor	Depending on vehicle speed: Pulsing signal
A10	BRN	SCS	Timing and adjustment service check signal	With ignition switch ON (II) and data link connector open: 5 V With ignition switch ON (II) and data link connector connected with Honda PGM tester: 0 V
A14	GRN/BLK	D4IND	D4 indicator light control	When ignition switch is first turned ON (II): Battery voltage for two seconds In D4 position: Battery voltage
A28	WHT/RED	ILU	Interlock control	When ignition switch ON (II), brake pedal pressed, and accelerator pedal released: Battery voltage
A32	WHT/BLK	BKSW	Brake pedal position switch signal output	Brake pedal pressed: Battery voltage Brake pedal released: 0 V

(cont'd)

System Description (cont'd)

Electronic Control System (cont'd)

PCM Inputs and Outputs

PCM Connector Terminal Locations

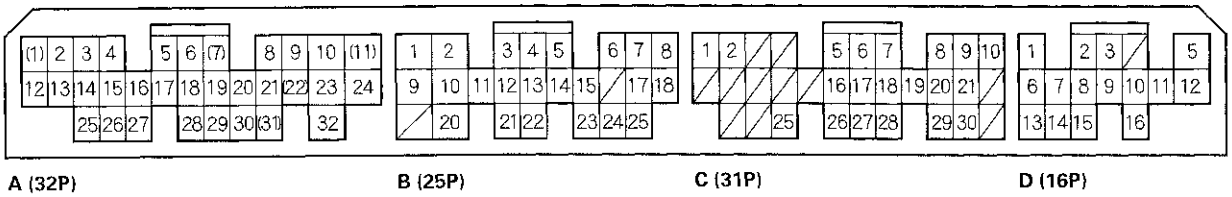

PCM CONNECTOR B (25P)

Terminal Number	Wire	Signal	Description	Measuring Conditions/Terminal Voltage
B1	YEL/BLK	IGP1	Power supply circuit from main relay	With ignition switch ON (II): Battery voltage With ignition switch OFF: 0 V
B2	BLK	PG1	Ground	
B8	WHT	LS A −	A/T clutch pressure control solenoid valve A power supply negative electrode	
B9	YEL/BLK	IGP2	Power supply circuit from main relay	With ignition switch ON (II): Battery voltage With ignition switch OFF: 0 V
B10	BLK	PG2	Ground	
B14 ('98-99)	BLU/BLK	OP2SW	A/T 2nd clutch pressure switch signal input	With ignition switch ON (II): Battery voltage (No 2nd clutch pressure)
B14 ('00-01)	BLU/BLK	ATPNP	Transmission range switch P and N positions input	In P and N positions: 0 V In other than P and N position: Battery voltage
B17	RED	LSA+	A/T clutch pressure control solenoid valve A power supply positive electrode	With ignition switch ON (II): Pulsing signal
B18	GRN	LSB−	A/T clutch pressure control solenoid valve B power supply negative electrode	
B20	BRN/BLK	LG1	Ground	
B21	WHT/YEL	VBU	Back-up power supply	Always battery voltage
B22	BLK ('98-99) BRN/BLK ('00-01)	LG2	Ground	
B24	BLU/WHT	OP3SW	A/T 3rd clutch pressure switch signal input	With ignition switch ON (II): Battery voltage (No 3rd clutch pressure)
B25	ORN	LSB+	A/T clutch pressure control solenoid valve B power supply positive electrode	With ignition switch ON (II): Pulsing signal

PCM CONNECTOR D (16P)

Terminal Number	Wire	Signal	Description	Measuring Conditions/Terminal Voltage
D1	YEL	LC	Torque converter clutch solenoid valve control	During lock-up conditions: Battery voltage During no lock-up condition: 0 V
D2	GRN/WHT	SHB	Shift solenoid valve B control	Battery voltage in following positions: • 1, 2 positions. • D4, and D3 positions in 1st and 2nd gear • P, R, and N positions 0 V in following positions: • D4, and D3 positions in 3rd gear • D4 position in 4th gear
D3	GRN	SHC	Shift solenoid valve C control	Battery voltage in following positions: • 1 position • D4, and D3 positions in 1st and 3rd gear 0 V in following positions: • 2 position • D4, and D3 positions in 2nd gear • D4 position in 4th gear • P, R, and N positions
D4	———	———	Not used	
D5	BLK/YEL	VBSOL	Power supply for solenoid valves (Fuse No.6 in driver's under-dash fuse/relay box)	With ignition switch ON (II): Battery voltage With ignition switch OFF: 0 V
D6	WHT	ATPR	Transmission range switch R position input	In R position: 0 V In other than R position: Battery voltage
D7	BLU/YEL	SHA	Shift solenoid valve A control	Battery voltage in following positions: • 2 position • D4, and D3 positions in 2nd and 3rd gear 0 V in following positions: • 1 position • D4, and D3 positions in 1st gear • D4 position in 4th gear • P, R, and N positions

(cont'd)

System Description (cont'd)

Electronic Control System (cont'd)

PCM Inputs and Outputs

PCM Connector Terminal Locations

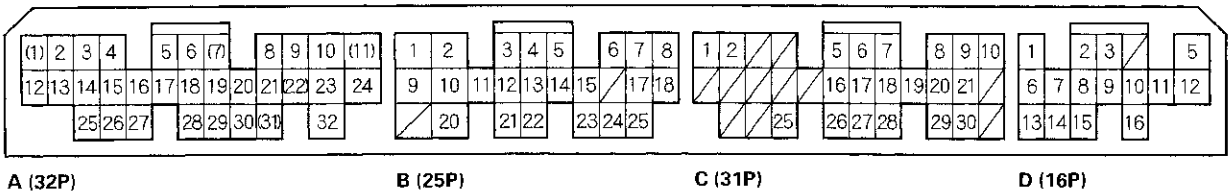

PCM CONNECTOR D (16P)

Terminal Number	Wire	Signal	Description	Measuring Conditions/Terminal Voltage
D8	PNK	ATPD3	Transmission range switch D3 position input	In D3 position: 0 V In other than D3 position: Battery voltage
D9	YEL	ATPD4	Transmission range switch D4 position input	In D4 position: 0 V In other than D4 position: Battery voltage
D10	BLU	NC	Countershaft speed sensor input	Depending on vehicle speed: Pulsing signal When vehicle is stopped: Approx. 0 V
D11	RED	NM	Mainshaft speed sensor input	Depending on vehicle speed: Pulsing signal When engine is stopped: Approx. 0 V
D12	WHT	NMSG	Mainshaft speed sensor ground	
D13 ('98-99)	BLU/WHT	ATPNP	Transmission range switch P and N positions input	In P and N positions: 0 V In other than P and N position: Battery voltage
D13 ('00-01)	BLU/BLK	OP2SW	A/T 2nd clutch pressure switch signal input	With ignition switch ON (II): Battery voltage (No 2nd clutch pressure)
D14	BLU	ATP2	Transmission range switch 2 position input	In 2 position: 0 V In other than 2 position: Battery voltage
D15	BRN	ATP1	Transmission range switch 1 position input	In 1 position: 0 V In other than 1 position: Battery voltage
D16	GRN	NCSG	Countershaft speed sensor ground	

Hydraulic Controls

The valve body includes the main valve body, the regulator valve body, the servo body and the accumulator body. The ATF pump is driven by splines on the left end of the torque converter which is attached to the engine. Fluid flows through the regulator valve to maintain specified pressure through the main valve body to the manual valve directing pressure to each of the clutches. The shift solenoid valves B and C are mounted on the outside of the torque converter housing. The shift solenoid valve A and the torque converter clutch solenoid valve are mounted on the torque converter housing as an assembly. The A/T clutch pressure control solenoid valves A and B are mounted on the transmission housing.

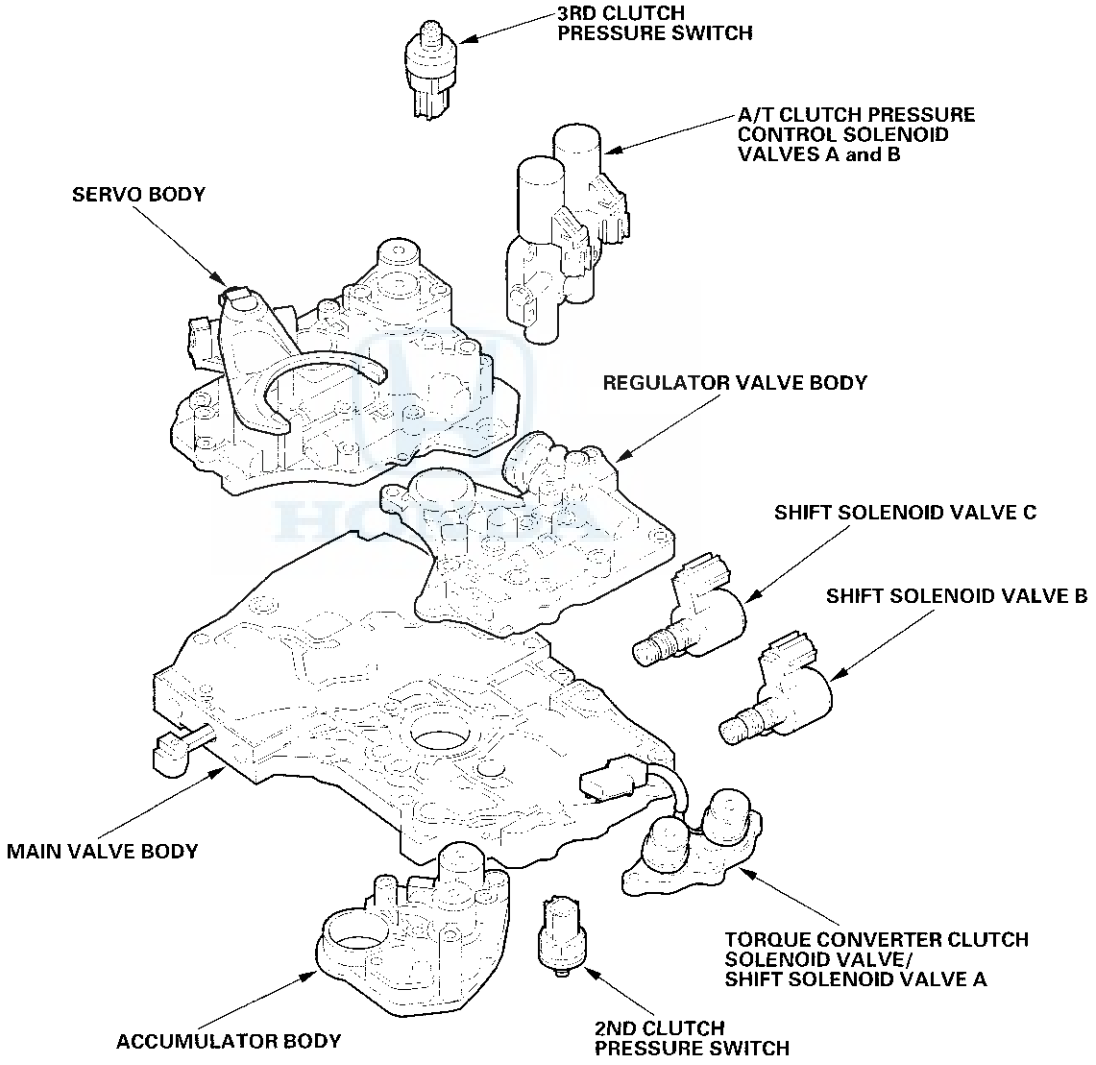

(cont'd)

System Description (cont'd)

Hydraulic Controls (cont'd)

Main Valve Body
The main valve body contains the manual valve, the modulator valve, the shift valve C, the shift valve D, the shift valve E, the servo control valve, the cooler check valve, the torque converter check valve, the reverse CPC valve, the lock-up shift valve, the relief valve, and the ATF pump gears. The primary function of the main valve body are to switch fluid pressure on and off and to control hydraulic pressure going to the hydraulic control system.

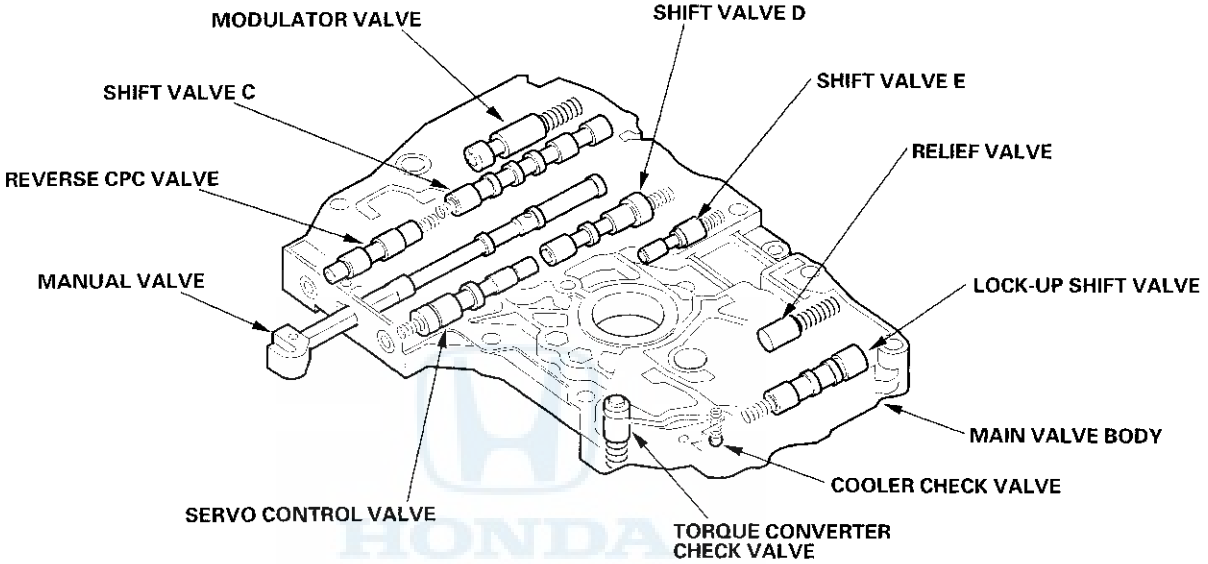

Regulator Valve Body
The regulator valve body is located on the main valve body. The regulator valve body contains the regulator valve, the lock-up timing valve and the lock-up control valve.

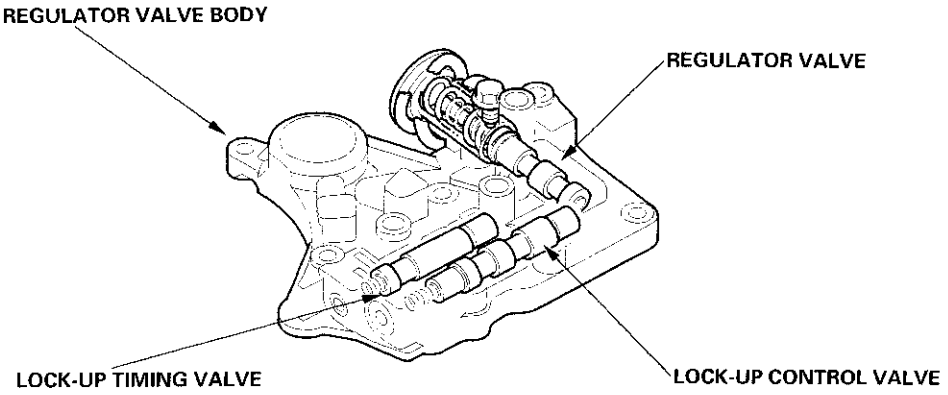

Regulator Valve

The regulator valve maintains constant hydraulic pressure from the ATF pump to the hydraulic control system, while also furnishing fluid to the lubricating system and torque converter. Fluid from the ATF pump flows through B and B'. Fluid entering from B flows through the valve orifice to the A cavity. This pressure of the A cavity pushes the regulator valve to the right side, and this movement of the regulator valve uncovers the fluid port to the torque converter and the relief valve. The fluid flows out to the torque converter and the relief valve, and the regulator valve moves to the left side. According to the level of the hydraulic pressure through B, the position of the regulator valve changes, and the amount of fluid from B' through torque converter changes. This operation is continued, maintaining the line pressure.

NOTE: When used, "left" or "right" indicates direction on the illustration below.

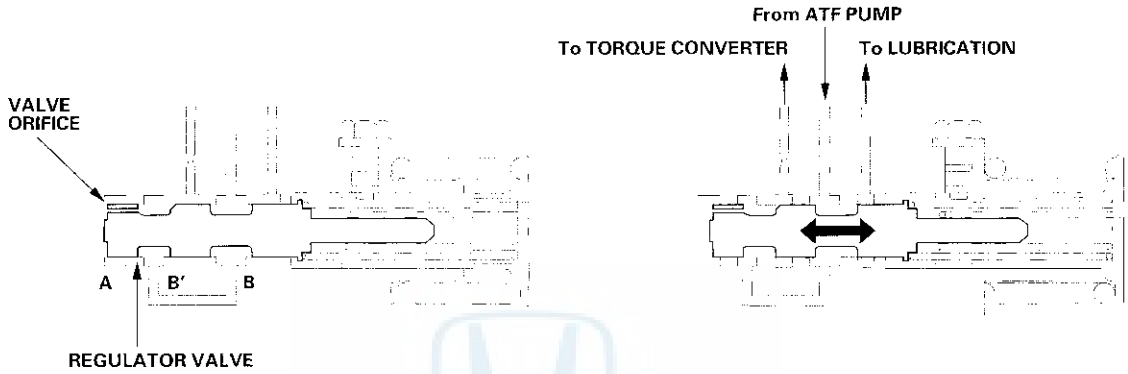

Increases in hydraulic pressure according to torque are performed by the regulator valve using stator torque reaction. The stator shaft is splined to the stator in the torque converter, and its arm end contacts the regulator spring cap. When the vehicle is accelerating or climbing (Torque Converter Range), stator torque reaction acts on the stator shaft, and the stator arm pushes the regulator spring cap in the direction of the arrow in proportion to the reaction. The stator reaction spring compresses, and the regulator valve moves to increase the line pressure which is regulated by the regulator valve. The line pressure reaches its maximum when the stator torque reaction reaches its maximum.

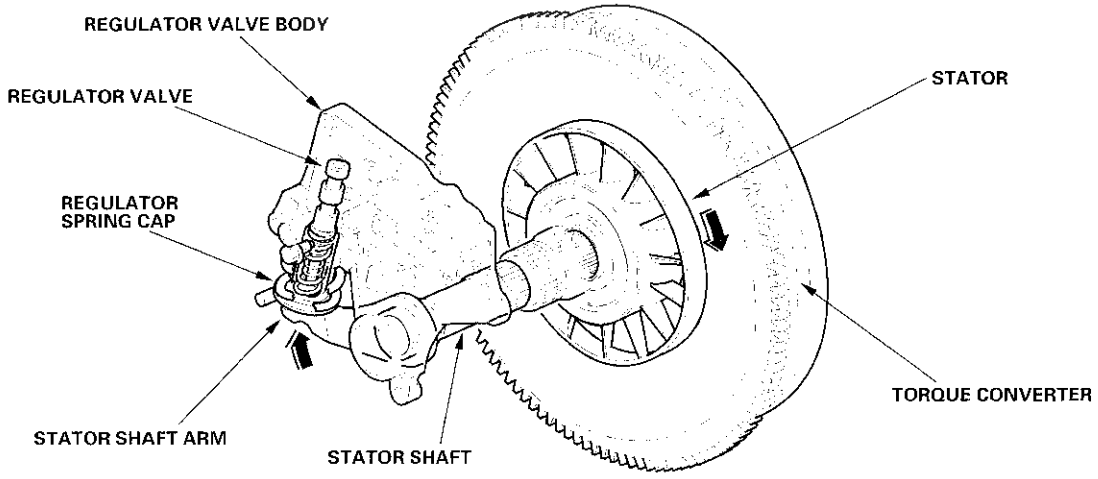

(cont'd)

System Description (cont'd)

Hydraulic Controls (cont'd)

Servo Body
The servo body is on the main valve body. It contains the servo valve, shift valve A, shift valve B, CPC valves A and B, and the 3rd and 4th accumulators.

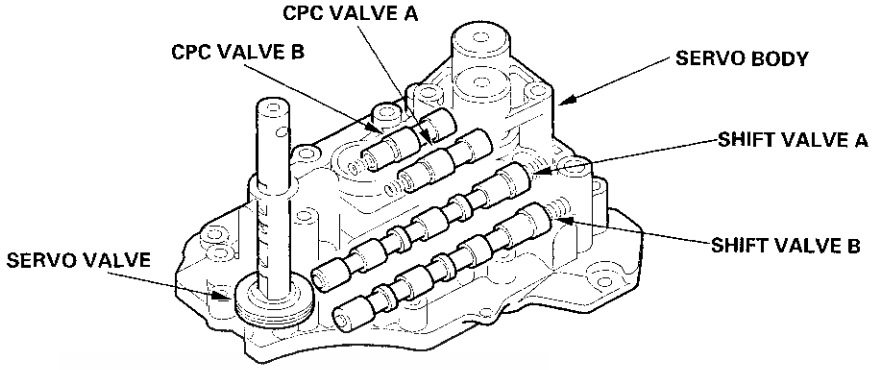

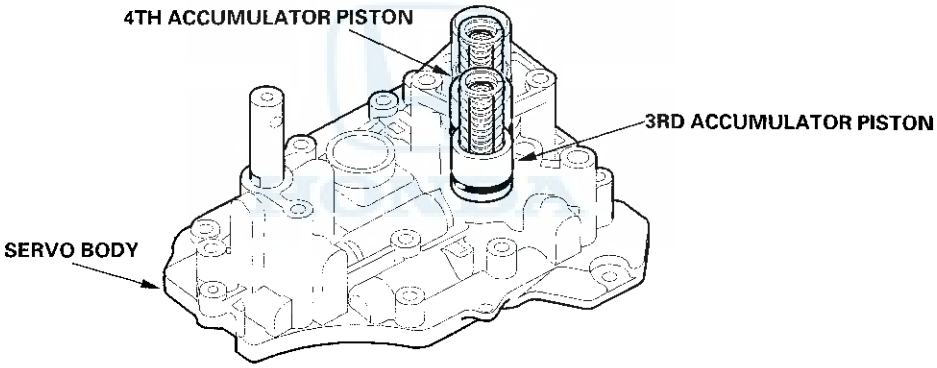

Accumulator Body
The accumulator body is on the torque converter housing, next to the main valve body. It contains the 1st and 2nd accumulators and the lubrication check valve.

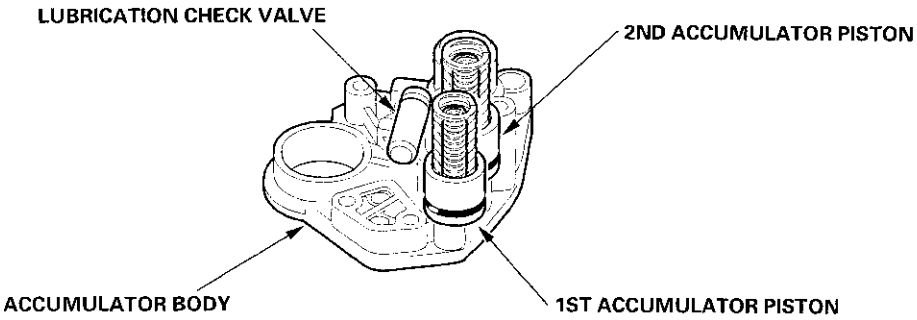

Hydraulic Flow

Distribution of Hydraulic Pressure

As the engine turns, the ATF pump starts to operate. Automatic transmission fluid (ATF) is drawn through the ATF strainer (filter) and discharged into the hydraulic circuit. Then, ATF flowing from the ATF pump becomes line pressure that's regulated by the regulator valve. Torque converter pressure from the regulator valve enters the torque converter through the lock-up shift valve and it is discharged from the torque converter. The torque converter check valve prevents torque converter pressure from rising.

The PCM controls the shift solenoid valves ON and OFF, and the shift solenoid valves control shift solenoid pressure to the shift valves. Applying shift solenoid pressure to the shift valves moves the position of the shift valve, and switches the port of hydraulic pressure. The PCM also controls A/T clutch pressure control solenoid valves A and B. The A/T clutch pressure control solenoid valves regulated the A/T clutch pressure control solenoid pressure and apply the A/T clutch pressure control solenoid pressure to CPC valves A and B.

When shifting between upper gear and lower gear, the clutch is engaged by pressure from the CPC pressure mode. The PCM controls one of the shift solenoid valves to move the position of the shift valve. This movement switches the port of the CPC and line pressure. Line pressure is then applied to the clutch, and the CPC pressure is intercepted. Engaging the clutch with line pressure happens when shifting is completed.

Hydraulic pressure at the parts is as follows:

PORT NO.	DESCRIPTION OF PRESSURE	PORT NO.	DESCRIPTION OF PRESSURE	PORT NO.	DESCRIPTION OF PRESSURE
1	LINE	5H	CPC B or LINE	57	LS B
3	LINE	5J	CPC B or LINE	58	LS A or LS B
3'	LINE	5K	CPC B or LINE	90	TORQUE CONVERTER
3''	LINE	5K'	CPC B or LINE	90'	TORQUE CONVERTER
4	LINE	6	MODULATE	91	TORQUE CONVERTER
4'	LINE	SA	SH A	91'	TORQUE CONVERTER
4''	LINE	SB	SH B	92	TORQUE CONVERTER
4A	CPC A	SC	SH C	93	ATF COOLER
4B	CPC B	LA	LC	94	TORQUE CONVERTER
5A	CPC A	9	LINE	95	LUBRICATION
5D	CPC B	10	1ST CLUTCH	95'	LUBRICATION
5B	CPC A or LINE	20	2ND CLUTCH	96	TORQUE CONVERTER
5E	CPC A or LINE	25	LINE	97	TORQUE CONVERTER
5F	CPC A or LINE	30	3RD CLUTCH	99	SUCTION
5F'	CPC A or LINE	40	4TH CLUTCH	X	DRAIN
5C	CPC B or LINE	41	4TH CLUTCH	HX	HIGH POSITION DRAIN
5G	CPC B or LINE	56	LS A	AX	AIR DRAIN

NOTE:
- CPC: Clutch Pressure Control pressure
- SH: Shift Solenoid pressure
- LS: A/T Clutch Pressure Control Solenoid pressure
- LC: Torque Converter Clutch Solenoid pressure

(cont'd)

System Description (cont'd)

Hydraulic Flow (cont'd)

N Position

The PCM controls the shift solenoid valves. The conditions of the shift solenoid valve and positions of the shift valve are as follows:
- The shift solenoid valve A is turned OFF, and the shift valve A is moved to the left side.
- The shift solenoid valve B is turned ON, and the shift valve B remains in the right side.
- The shift solenoid valve C is turned OFF, and the shift valve C remains in the left side.

Line pressure (1) passes through the manual valve and stops at shift valve D. Line pressure (1) also flows to the modulator valve, and becomes modulator pressure (6). Modulator pressure (6) flows to the shift solenoid valves and the A/T clutch pressure control solenoid valves. Under this condition, hydraulic pressure is not applied to the clutches.

NOTE:
- When used, "left" or "right" indicates direction on the hydraulic circuit.
- Hydraulic circuit shows the '98-99 models; the '00-01 models are similar.

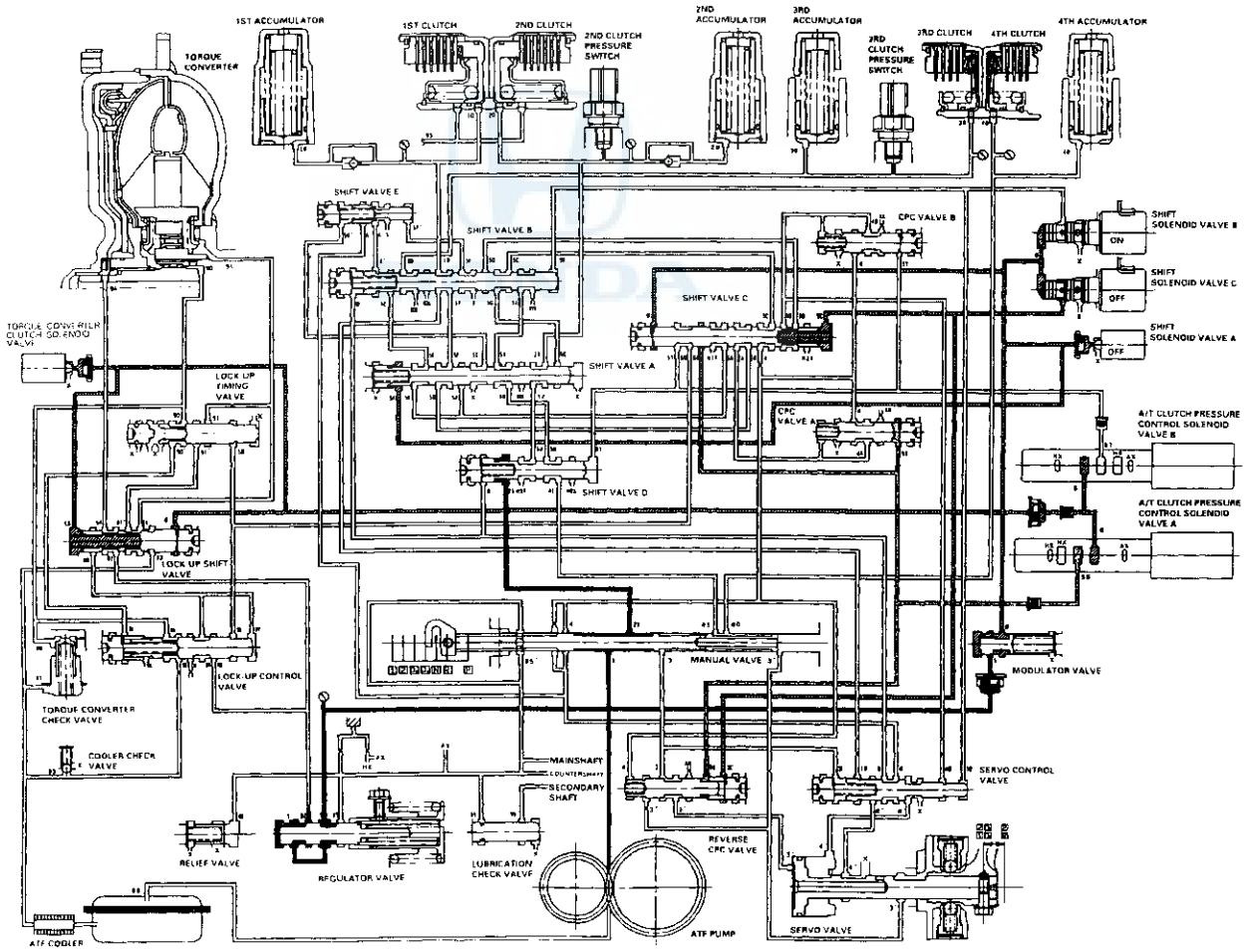

D4 Position; 1st gear shifting from N position

The PCM turns the shift solenoid valves A and C ON when shifting to D4 position from N. Shift solenoid valve B remains ON. Shift solenoid valve C is turned ON, and SH C pressure (SC) in the right side of the shift valve C is released, then the shift valve C is moved to the right side. Shift solenoid valve A is turned ON, and SH A pressure (SA) in the left side of the shift valve A is released, then shift valve A is moved to the right side. The A/T clutch pressure control solenoid valve A regulates LS A pressure (56) and applies it to CPC valve A. Line pressure (1) becomes line pressure (4) at the manual valve, and flows to shift valve C and CPC valve A. Line pressure (4) becomes CPC A pressure (4A) and passes through shift valve C, A, and B, then CPC A pressure (4A) becomes 1st clutch pressure (10) at shift valve B. 1st clutch pressure (10) is applied to the 1st clutch, then the 1st clutch is engaged with pressure of the CPC pressure mode. Line pressure (4) passes through shift valve A and B, then stops at shift valve B.

NOTE:
- When used, "left" or "right" indicates direction on the hydraulic circuit.
- Hydraulic circuit shows the '98-99 models; the '00-01 models are similar.

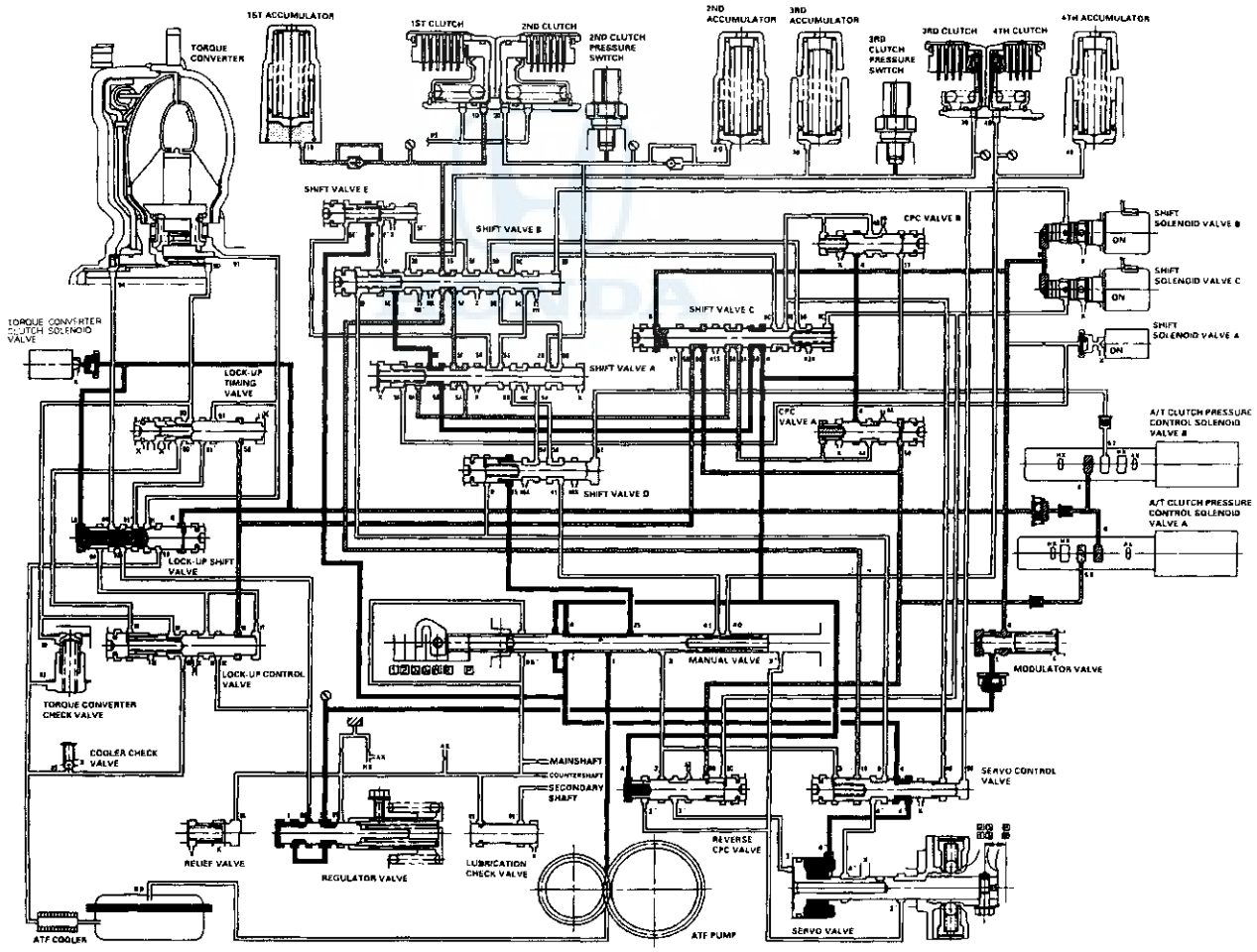

(cont'd)

System Description (cont'd)

Hydraulic Flow (cont'd)

D4 Position: Driving in 1st gear

The PCM turns shift solenoid valve A OFF, but shift solenoid valves B and C remain ON. SH A pressure (SA) is applied to the left side of shift valve A, then shift valve A is moved to the left side. This movement switches the port of line pressure and CPC pressure on shift valve A. The 1st clutch pressure is changed to line pressure mode, and the 1st clutch is engaged securely. CPC A pressure (5E) stops at shift valve B.

NOTE:
- When used, "left" or "right" indicates direction on the hydraulic circuit.
- Hydraulic circuit shows the '98-99 models; the '00-01 models are similar.

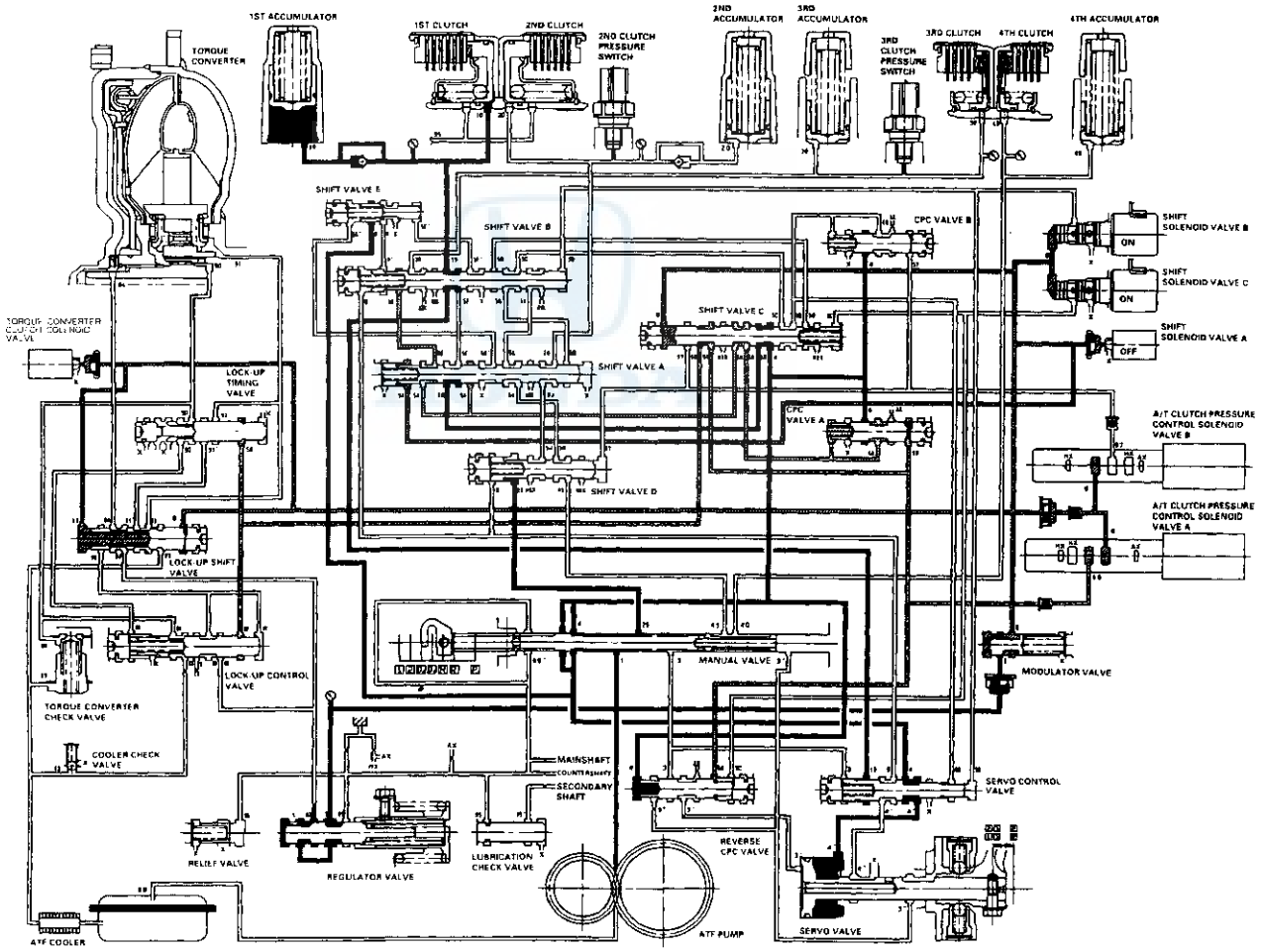

D4 Position: Shifting between 1st gear and 2nd gear

As the speed of the vehicle reaches the prescribed value, the PCM turns shift solenoid valve A OFF. Shift solenoid valves B and C remain ON. Then shift solenoid valve A is turned ON, and SH A pressure (SA) in the left side of the shift valve A is released. Shift valve A is moved to the right side to switch the port of line pressure and CPC pressure. The PCM also controls the A/T clutch pressure control solenoid valves. The A/T clutch pressure control solenoid valves A and B apply their pressure to the CPC valves A and B. Line pressure (4) becomes CPC B pressure (4B) at the CPC valve B, and CPC B pressure passes through shift valves C, B, and A, to become 2nd clutch pressure. The 1st and 2nd clutches are engaged with the CPC pressure mode.

NOTE:
- When used, "left" or "right" indicates direction on the hydraulic circuit.
- Hydraulic circuit shows the '98-99 models; the '00-01 models are similar.

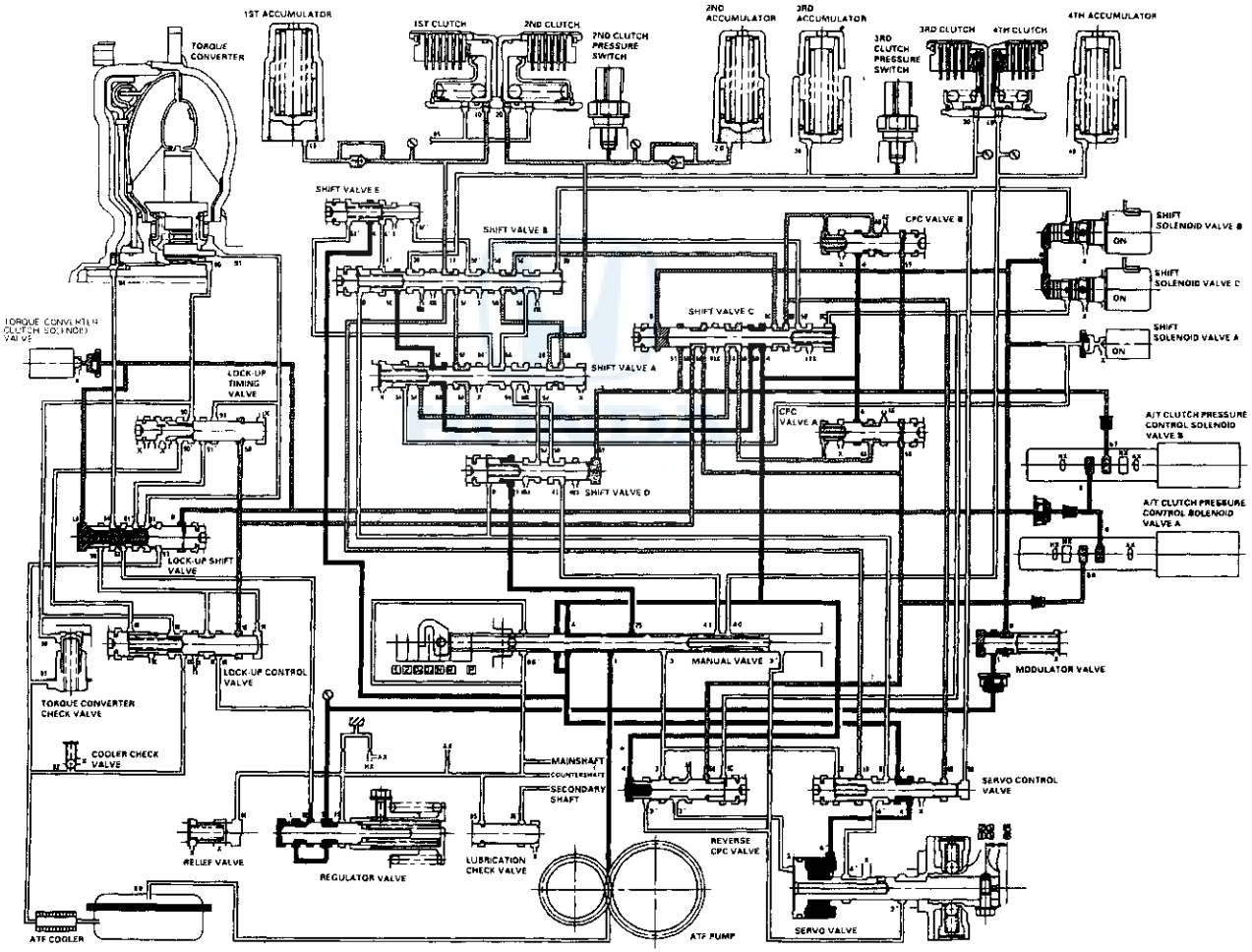

(cont'd)

System Description (cont'd)

Hydraulic Flow (cont'd)

D4 Position: Driving in 2nd gear

The PCM turns shift solenoid valve C OFF, and controls A/T clutch pressure control solenoid valve A to release LS A pressure (56). Shift solenoid valves A and B remain ON. Releasing LS A pressure in the CPC valve A releases CPC A pressure in the 1st clutch pressure circuit. Shift solenoid valve C is turnd OFF, and SH C pressure (SC) is applied to the right side of shift valve C. Then shift valve C is moved to the left side to switch the port of line pressure and CPC pressure. The 2nd clutch pressure is changed to line pressure mode, and the 2nd clutch is engaged securely. The CPC B pressure (5D) stops at shift valve B.

NOTE:
- When used, "left" or "right" indicates direction on the hydraulic circuit.
- Hydraulic circuit shows the '98-99 models; the '00-01 models are similar.

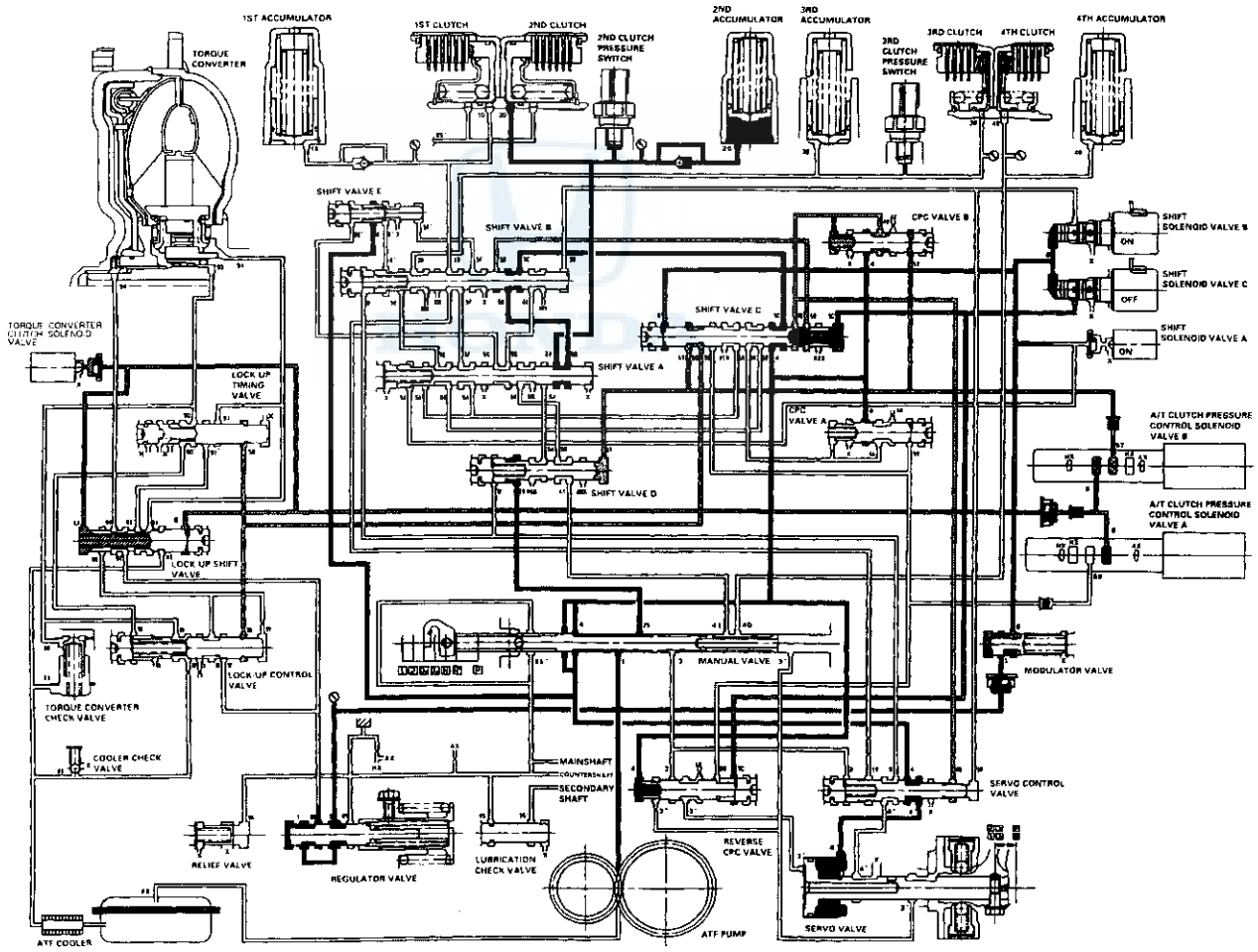

D4 Position: Shifting between 2nd gear and 3rd gear

As the speed of the vehicle reaches the prescribed value, the PCM turns shift solenoid valve B OFF. The PCM also control A/T clutch pressure control solenoid valve A to apply LS A pressure (56) to CPC valve A. Shift solenoid valve A remains ON, and C remains OFF. Shift solenoid valve B is turned OFF, and SH B pressure (SB) is applied to the right side of shift valve B. Then shift valve B is moved to the left side to switch the port of line pressure and CPC pressure. Line pressure (4) becomes CPC A pressure (4A) at the CPC valve A. The CPC A pressure (4A) becomes 3rd clutch pressure (30) at shift valve B, and flows to the 3rd clutch. The 2nd clutch pressure is changed to CPC pressure mode by switching the position of shift valve B.

NOTE:
- When used, "left" or "right" indicates direction on the hydraulic circuit.
- Hydraulic circuit shows the '98-99 models; the '00-01 models are similar.

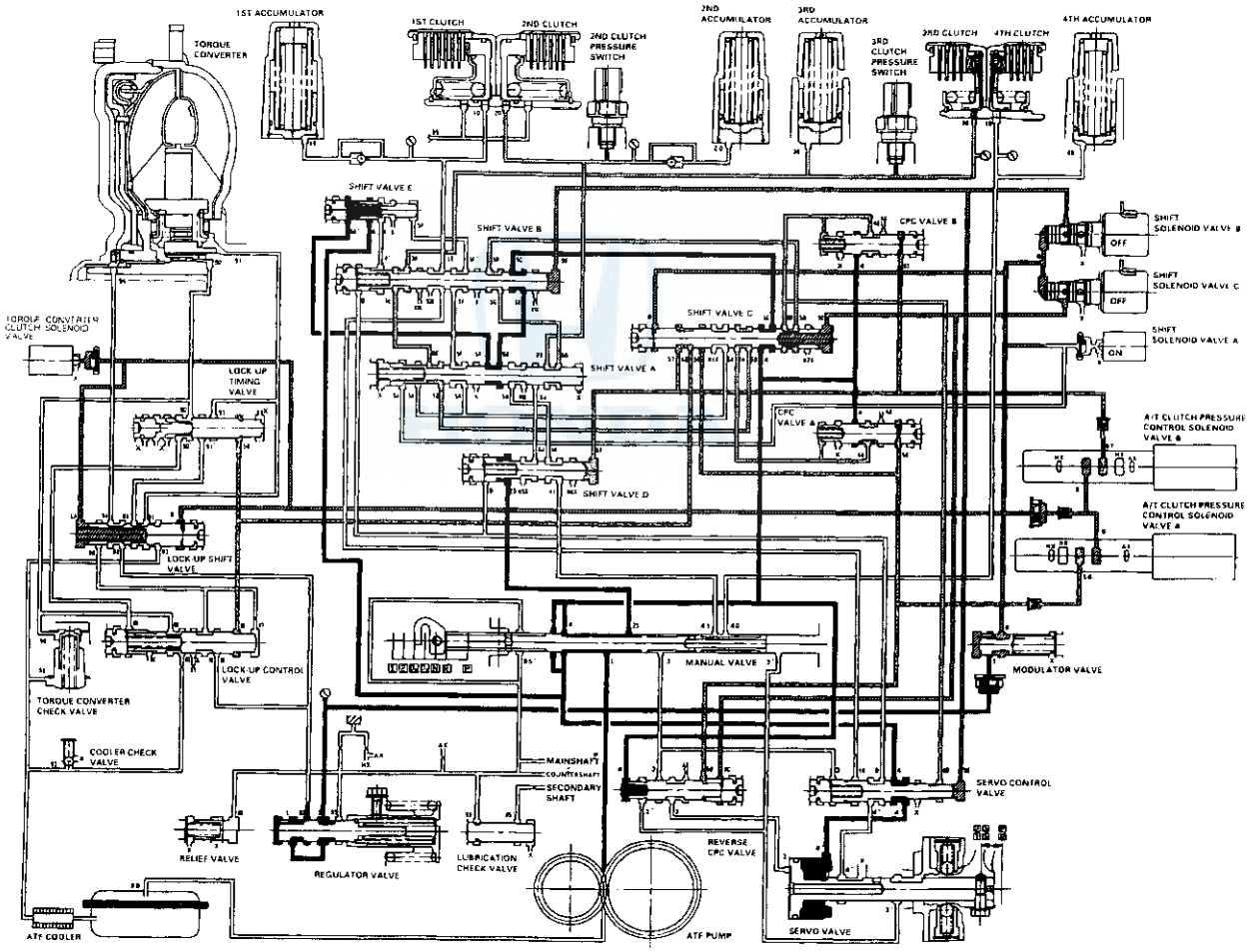

(cont'd)

System Description (cont'd)

Hydraulic Flow (cont'd)

D4 Position: Driving in 3rd gear

The PCM turns the shift solenoid valve C ON, and controls A/T clutch pressure control solenoid valve B to release LS B pressure (57). Shift solenoid valve A remains ON, and B remains OFF. Releasing LS B pressure in the CPC valve B releases CPC B pressure in the 2nd clutch pressure circuit. Shift solenoid valve C is turned ON, and SH C pressure (SC) in the right side of shift valve C is released. Then shift valve C is moved to the right side to switch the port of line pressure and CPC pressure. The 3rd clutch pressure is changed to line pressure mode, and the 3rd clutch is engaged securely. The CPC A pressure (4A) stops at shift valve E.

NOTE:
- When used, "left" or "right" indicates direction on the hydraulic circuit.
- Hydraulic circuit shows the '98-99 models; the '00-01 models are similar.

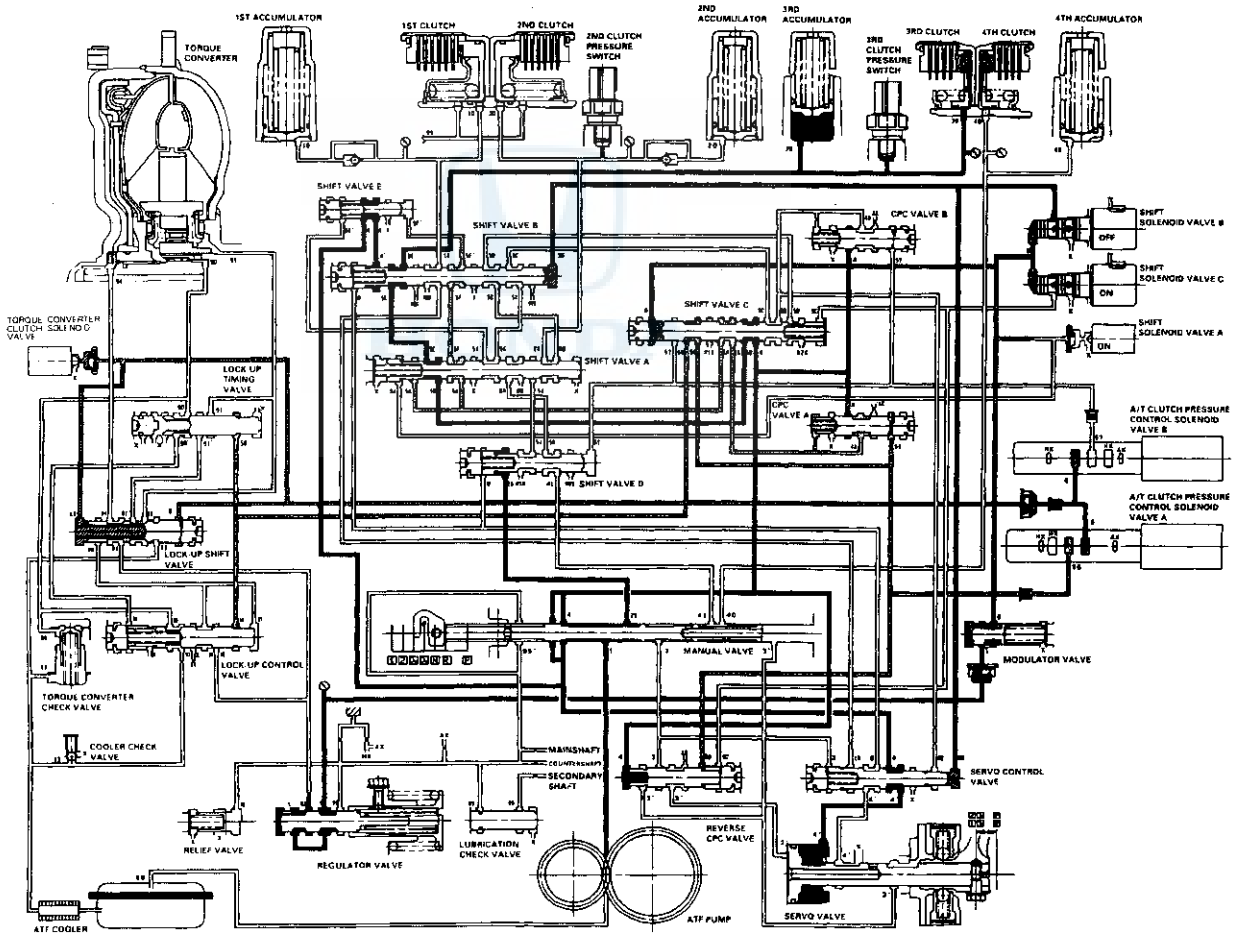

D4 Position: Shifting between 3rd gear and 4th gear

As the speed of the vehicle reaches the prescribed value, the PCM turns shift solenoid valve A OFF. The PCM also controls A/T clutch pressure control solenoid valve B to apply LS B pressure (57) to CPC valve B. Shift solenoid valve B remains OFF, and C remains ON. Shift solenoid valve A is turned OFF, and SH A pressure (SA) is applied to the left side of shift valve A. Then shift valve A is moved to the left side to switch line pressure and CPC pressure. Line pressure (4) becomes CPC B pressure (4B) at CPC valve B. The CPC B pressure (4B) becomes 4th clutch pressure (41) at shift valve D, and flows to the 4th clutch via the manual valve. The 3rd clutch pressure is changed to CPC pressure mode by switching the position of shift valve A.

NOTE:
- When used, "left" or "right" indicates direction on the hydraulic circuit.
- Hydraulic circuit shows the '98-99 models; the '00-01 models are similar.

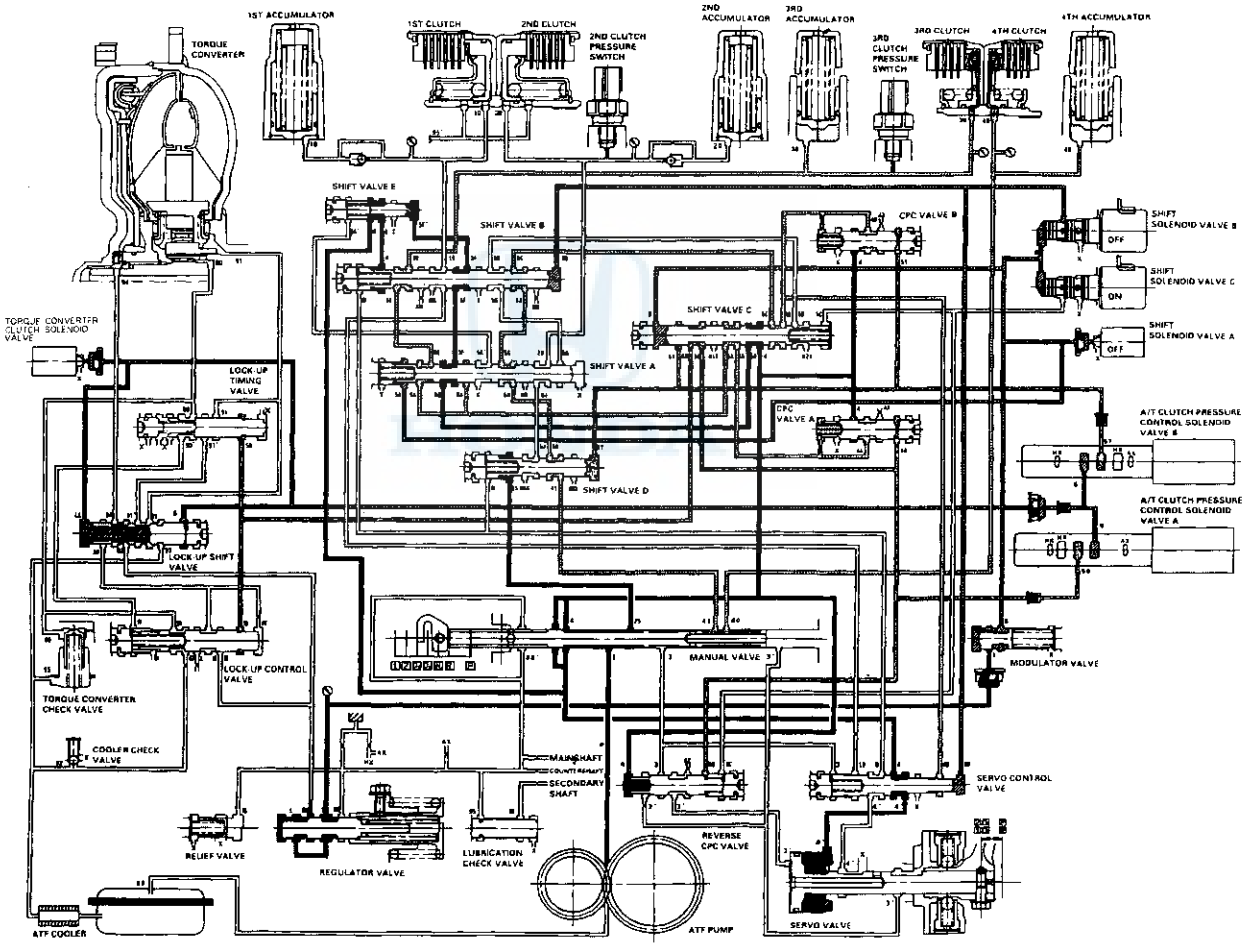

(cont'd)

System Description (cont'd)

Hydraulic Flow (cont'd)

D4 Position: Driving in 4th gear

The PCM turns shift solenoid valve C OFF, and controls A/T clutch pressure control solenoid valve A to release LS A pressure (56). Shift solenoid valves A and B remain OFF. Releasing LS A pressure (56) releases CPC A pressure in the 3 rd clutch pressure circuit. Shift solenoid valve C is turned OFF, and SH C pressure (SC) is applied to the right side of shift valve C. Then shift valve C is moved to the left side to switch the port of line pressure and CPC pressure.
The CPC B pressure (5B) changes to line pressure (5B) at shift valve C, and flows to the 4th clutch via shift valve B, shift valve C, shift valve D, and the manual valve. The 4th clutch pressure is changed to line pressure mode by switching the position of shift valve C, and 4th clutch is engaged securely. The CPC B pressure (5D) stops at shift valve A.

NOTE:
- When used, "left" or "right" indicates direction on the hydraulic circuit.
- Hydraulic circuit shows the '98-99 models; the '00-01 models are similar.

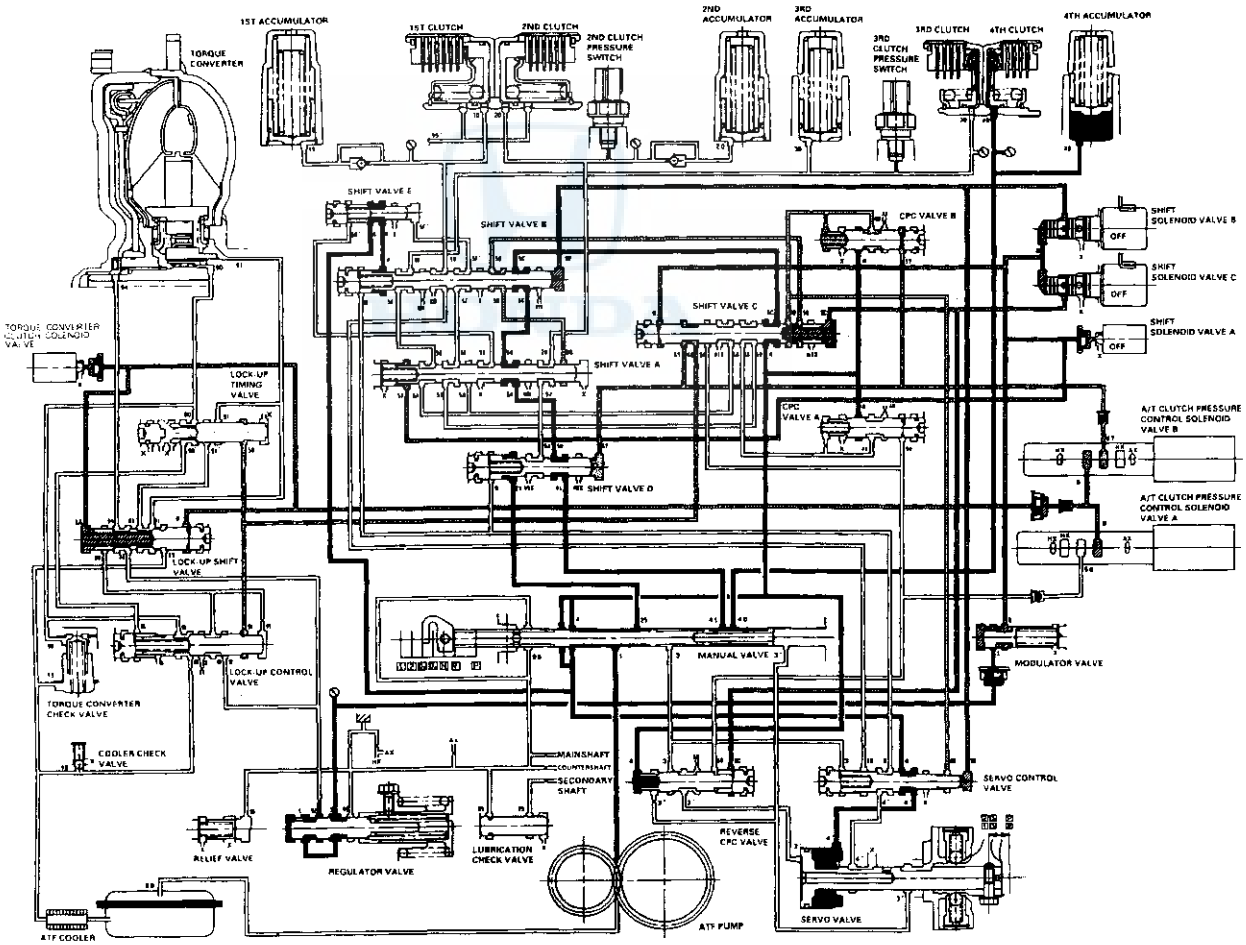

2 Position

The PCM controls the shift solenoid valves and the A/T clutch pressure control solenoid valves. The conditions of the shift solenoid valves and the positions of the shift valve are as follows:

- Shift solenoid valve A is turned ON, and the shift valve A is in the right side.
- Shift solenoid valve B is turned ON, and the shift valve B is in the right side.
- Shift solenoid valve C is turned OFF, and the shift valve C is moved to the left side.

The PCM also controls A/T clutch pressure control solenoid valve B to apply LS B pressure (57) to CPC valve B. Line pressure (4) from the manual valve becomes line pressure (5C) at shift valve C. Line pressure (5C) flows to shift valve A via shift valve B, and becomes 2nd clutch pressure (20). The 2nd clutch pressure is applied to the 2nd clutch, and 2nd clutch is engaged.

NOTE:

- When used, "left" or "right" indicates direction on the hydraulic circuit.
- Hydraulic circuit shows the '98-99 models; the '00-01 models are similar.

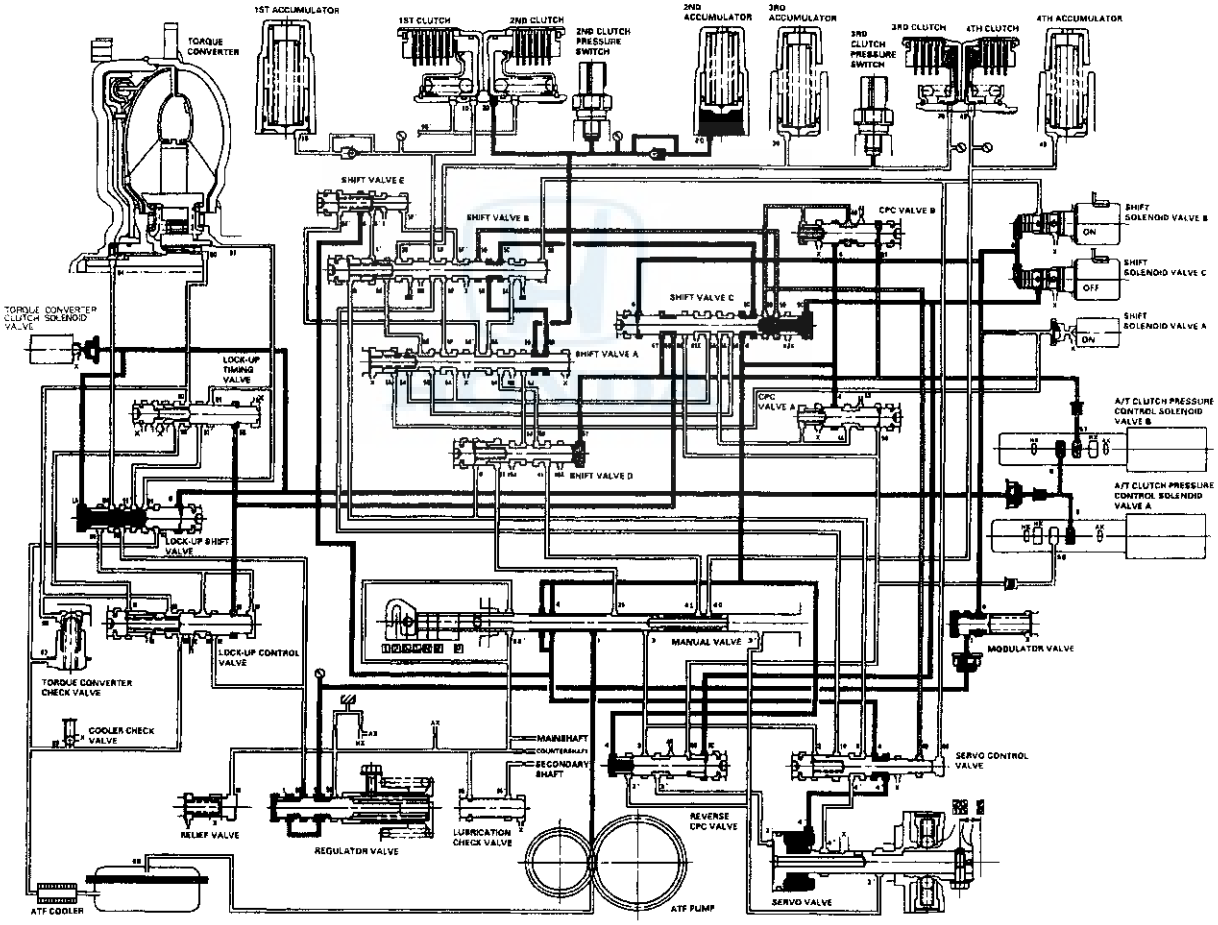

(cont'd)

System Description (cont'd)

Hydraulic Flow (cont'd)

1 Position

The PCM the shift solenoid valves and the A/T clutch pressure control solenoid valves. The conditions of the shift solenoid valves and the positions of the shift valve are as follows:
- Shift solenoid valve A is turned OFF, and shift valve A is moved to the left side.
- Shift solenoid valve B is turned ON, and shift valve B is in the right side.
- Shift solenoid valve C is turned ON, and shift valve C is in the right side.

Line pressure (4) becomes line pressure (5B) at shift valve C. Line pressure (5C) flows to shift valve B via shift valve A, and becomes 1st clutch pressure (10). 1st clutch pressure (10) is applied to the 1st clutch, then 1st clutch is engaged.

NOTE:
- When used, "left" or "right" indicates direction on the hydraulic circuit.
- Hydraulic circuit shows the '98-99 models; the '00-01 models are similar.

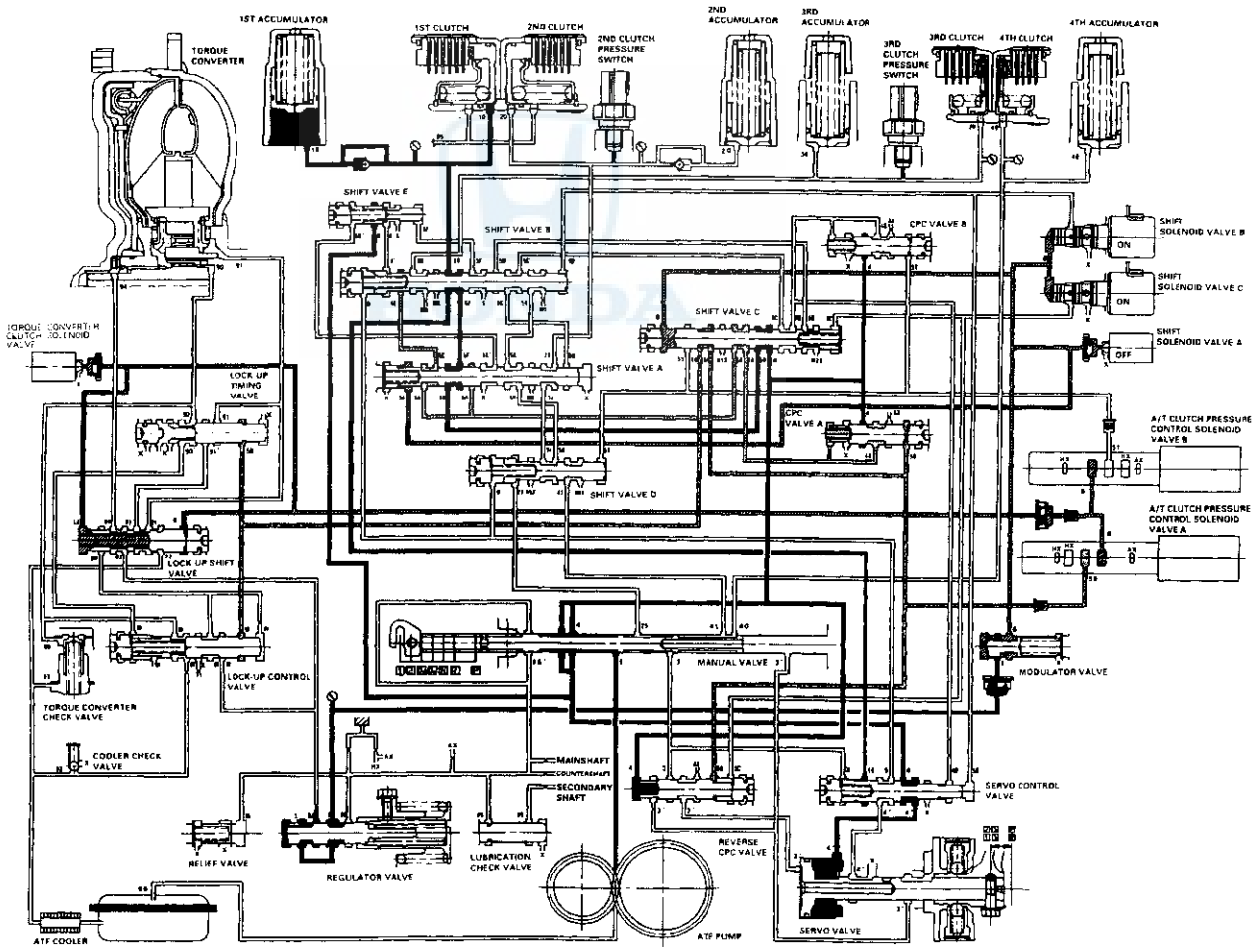

R Position: Shifting to R position from P or N position

Line pressure (1) becomes line pressure (3) at the manual valve, and flows to the reverse CPC valve. Line pressure (3) is regulated by the reverse CPC valve and becomes line pressure (3′). Line pressure (3′) pushes the servo valve to the reverse position, passes through the servo valve, and flows to the manual valve. Line pressure (3′) becomes 4th clutch pressure (40). The 4th clutch pressure (40) is applied to the 4th clutch, and 4th clutch is engaged with the reverse CPC pressure mode.

NOTE:
- When used, "left" or "right" indicates direction on the hydraulic circuit.
- Hydraulic circuit shows the '98-99 models; the '00-01 models are similar.

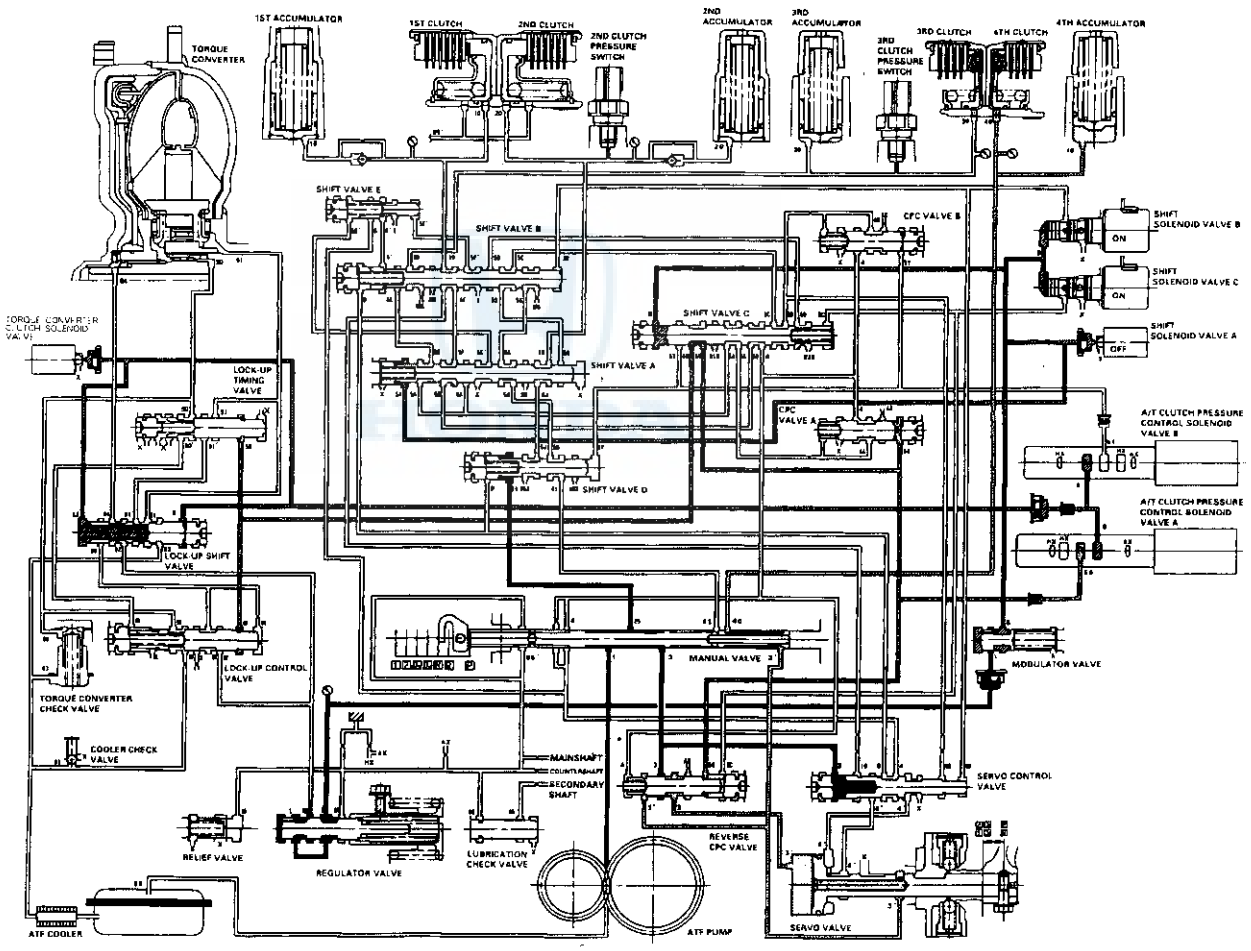

(cont'd)

System Description (cont'd)

Hydraulic Flow (cont'd)

Ⓡ Position: Driving in reverse gear

The PCM turns shift solenoid valve C OFF. Shift solenoid valve A remains OFF, and B remains ON. Shift solenoid valve C is turned OFF, and SH C pressure (SC) is applied to the right side of the reverse CPC valve. Then the reverse CPC valve moves to the left side, creating full line pressure. Line pressure to the 4th clutch is same as shifting to Ⓡ position, and 4th clutch pressure increases. The 4th clutch is engaged with line pressure mode.

NOTE:
- When used, "left" or "right" indicates direction on the hydraulic circuit.
- Hydraulic circuit shows the '98-99 models; the '00-01 models are similar.

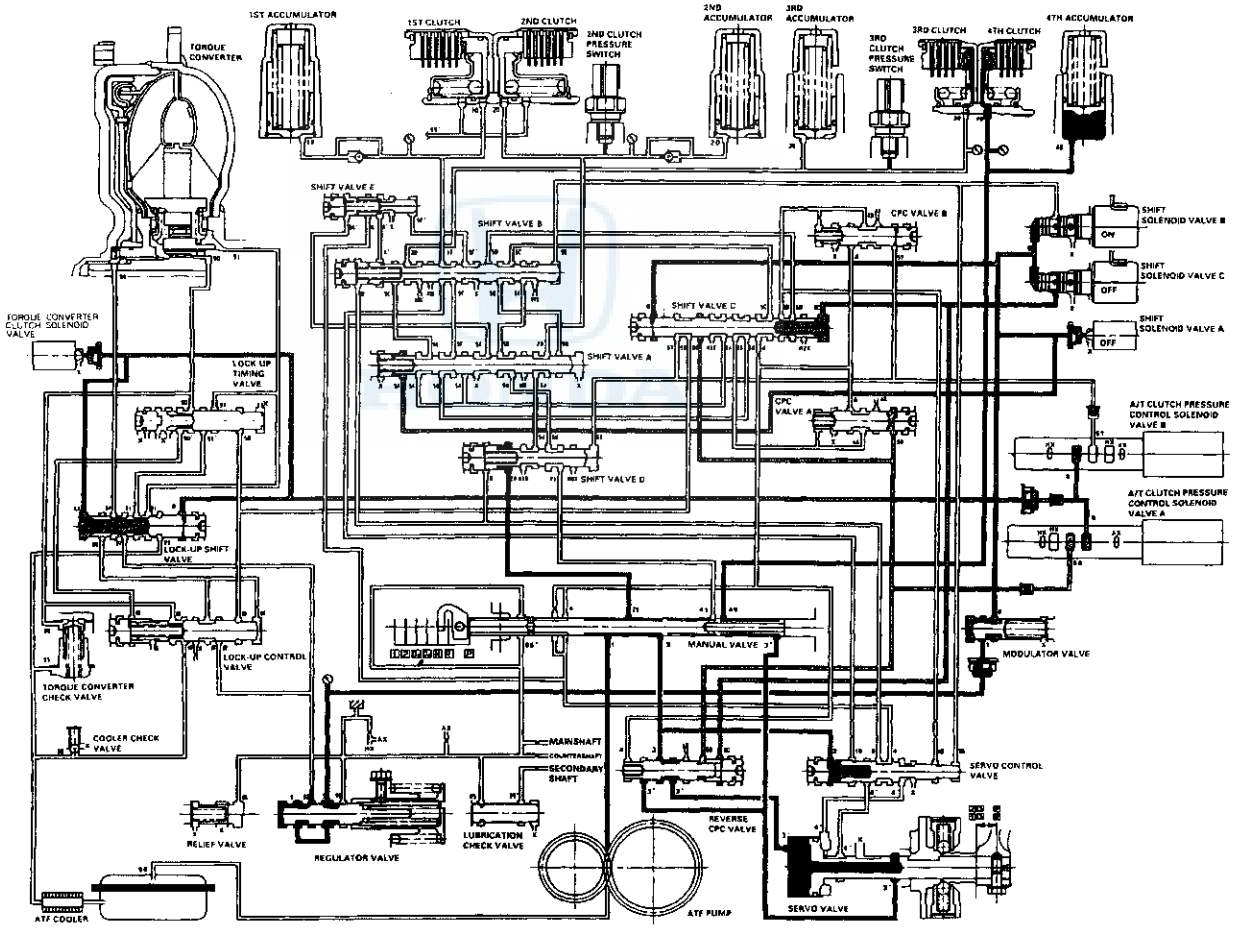

P Position

Shift solenoid valve C is turned OFF by the PCM, and SH C pressure (SC) is applied to the right side of the reverse CPC valve. Then the reverse CPC valve is moved to the left side to uncover the port leading line pressure (3) to the servo valve. Line pressure (3') passes through the servo valve and flows to the manual valve. Line pressure (3') is intercepted at the manual valve, and is not applied to the clutches.

NOTE:
- When used, "left" or "right" indicates direction on the hydraulic circuit.
- Hydraulic circuit shows the '98-99 models; the '00-01 models are similar.

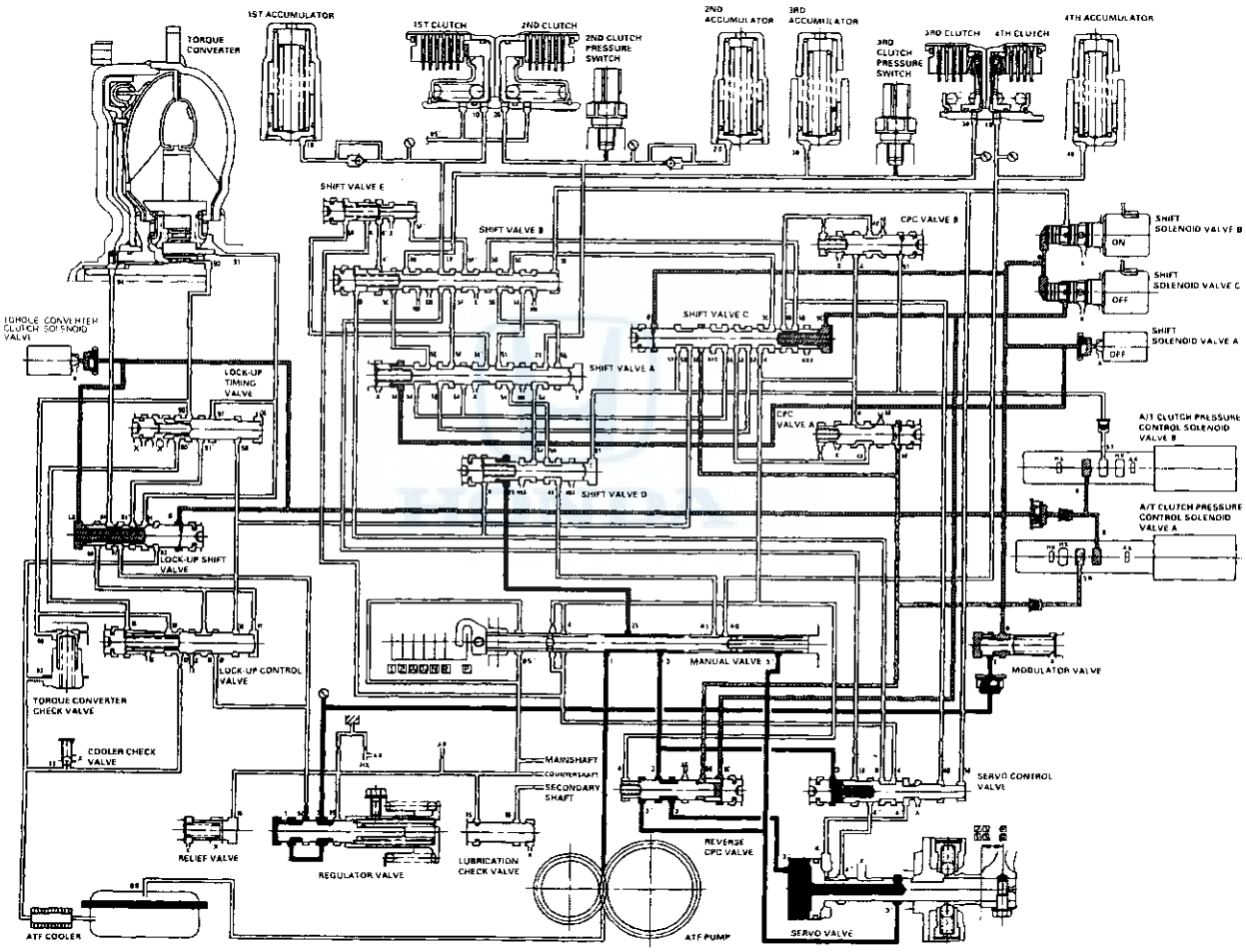

(cont'd)

System Description (cont'd)

Lock-up System

In D4 position (3rd and 4th), and D3 position (3rd), pressurized fluid is drained from the back of the torque converter through a fluid passage, causing the lock-up piston to be held against the torque converter cover. As this takes place, the mainshaft rotates at the same speed as the engine crankshaft. Together with hydraulic control, the PCM optimizes the timing of the lock-up mechanism. When the torque converter clutch solenoid valve activates, modulator pressure changes to switch lock-up ON and OFF. The lock-up control valve and the lock-up timing valve control the range of lock-up according to A/T clutch pressure control solenoid valves A and B. The torque converter clutch solenoid valve is mounted on the torque converter housing, and A/T clutch pressure control solenoid valves A and B are mounted on the transmission housing. They are controlled by the PCM.

General Operation

1. Operation (clutch on)
   With the lock-up clutch on, fluid in the chamber between the torque converter cover and the lock-up piston is drained off, and the converter fluid exerts pressure through the piston against the torque converter cover. As a result, the converter turbine is locked to the converter cover. The effect is to bypass the converter, placing the vehicle in direct drive.

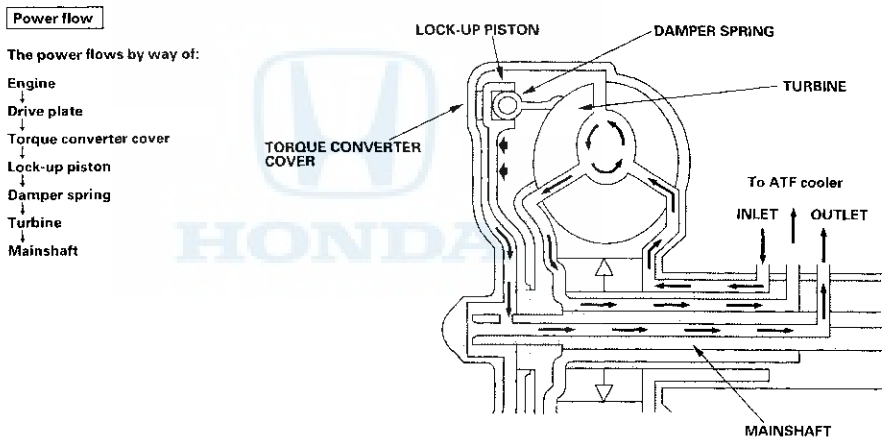

2. Operation (clutch off)
   With the lock-up clutch off, fluid flows in the reverse of CLUTCH ON. As a result, the lock-up piston moves away from the converter cover, and torque converter lock-up is released.

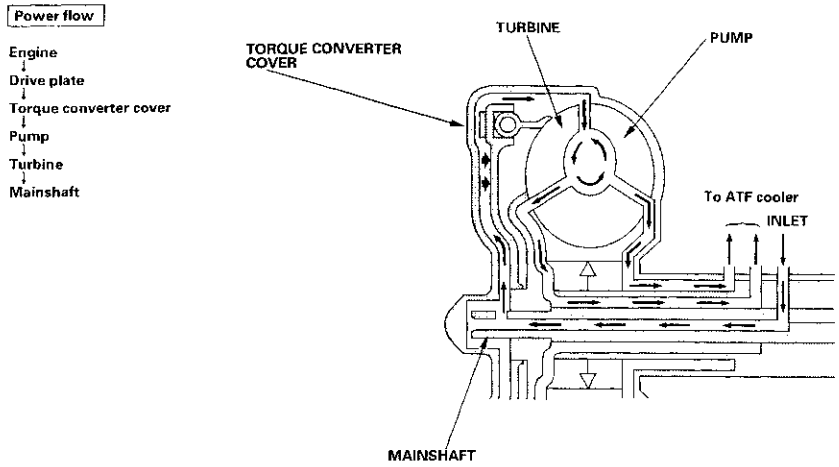

No Lock-up

The torque converter clutch solenoid valve is turned OFF by the PCM. The lock-up shift valve receives LC pressure (LA) on the left side, and modulator pressure (6) on the right side. The lock-up shift valve is in the right side to uncover the port leading torque converter pressure (92) to the left side of the torque converter. Torque converter pressure (92) becomes torque converter pressure (94), and enters into the left side of the torque converter to disengage the lock-up clutch. The lock-up clutch is OFF.

NOTE:
- When used, "left" or "right" indicates direction on the hydraulic circuit.
- Hydraulic circuit shows the '98-99 models; the '00-01 models are similar.

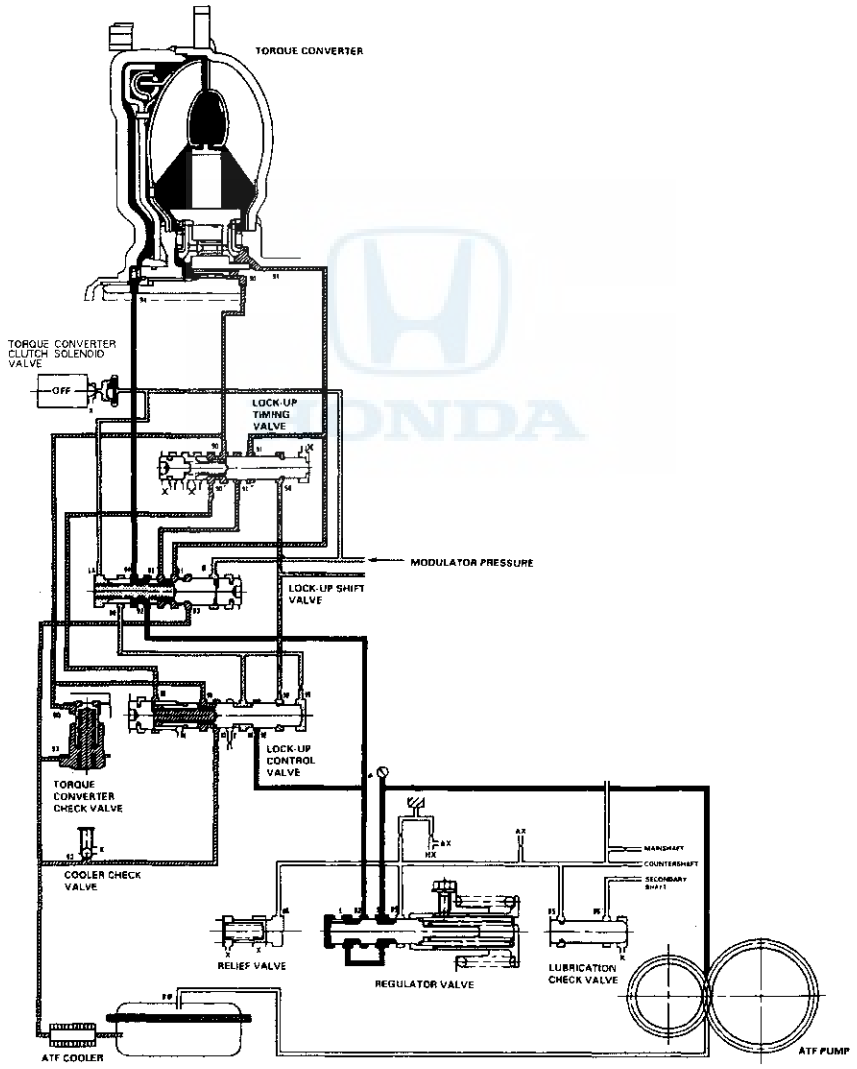

(cont'd)

System Description (cont'd)

Lock-up System (cont'd)

Partial Lock-up

As the speed of the vehicle reaches the prescribed value, the torque converter clutch solenoid valve is turned ON by the PCM to release LC pressure (LA) in the left side of the lock-up shift valve. The lock-up shift valve is moved to the left side to switch the port leading torque converter pressure to the left side and right side of the torque converter. Torque converter pressure (92) flows to the right side of the torque converter to engage the lock-up clutch. The PCM also controls A/T clutch pressure control solenoid valves A and B, and LS A or LS B pressure is applied to the lock-up control valve and the lock-up timing valve. The position of the lock-up control valve depends on torque converter pressure and LS A or LS B pressure. When LS A or LS B pressure (58) is lower, torque converter pressure (91) from the lock-up timing valve is lower. The lock-up clutch is engaged partially. LS A or LS B (58) increases, and the lock-up timing valve is moved to the left side to uncover the port leading torque converter pressure to high. The lock-up clutch is then engaged securely. Under this condition, the lock-up clutch is engaged by pressure from the right side of the torque converter; this condition is partial lock-up.

NOTE:
- When used, "left" or "right" indicates direction on the hydraulic circuit.
- Hydraulic circuit shows the '98-99 models; the '00-01 models are similar.

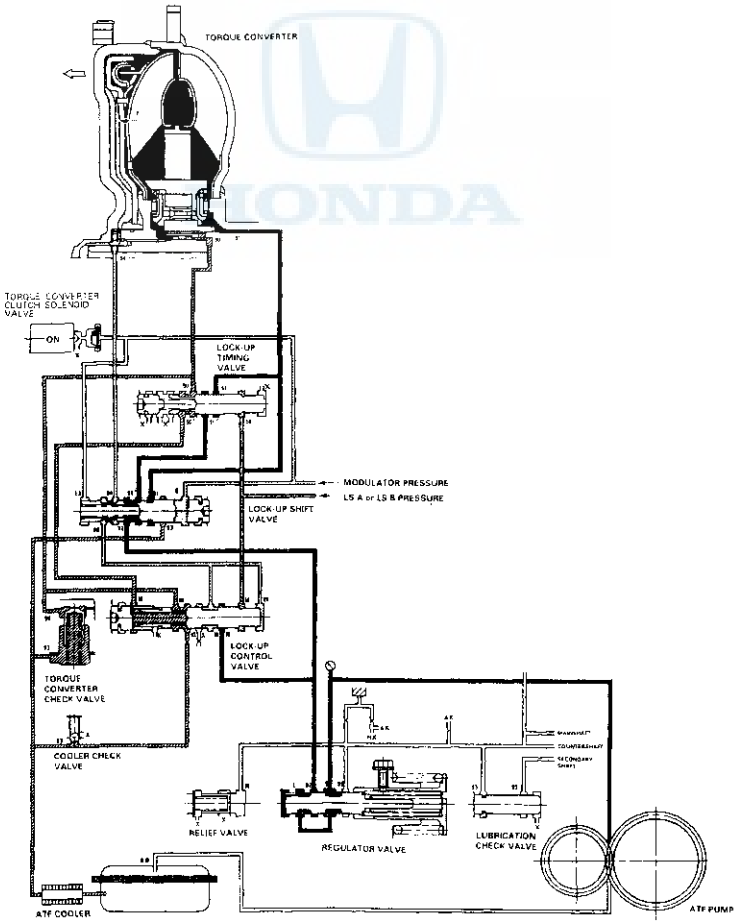

Full Lock-up

When the vehicle speed further increases, the PCM controls A/T clutch pressure control solenoid valves A and B to increase LS A or LS B pressure (58). The LS A or LS B pressure (58) is applied to the lock-up control valve and the lock-up timing valve, and moves them to the left side. Under this condition, torque converter back pressure is released fully, causing the lock-up clutch to be fully engaged.

NOTE:
- When used, "left" or "right" indicates direction on the hydraulic circuit.
- Hydraulic circuit shows the '98-99 models; the '00-01 models are similar.

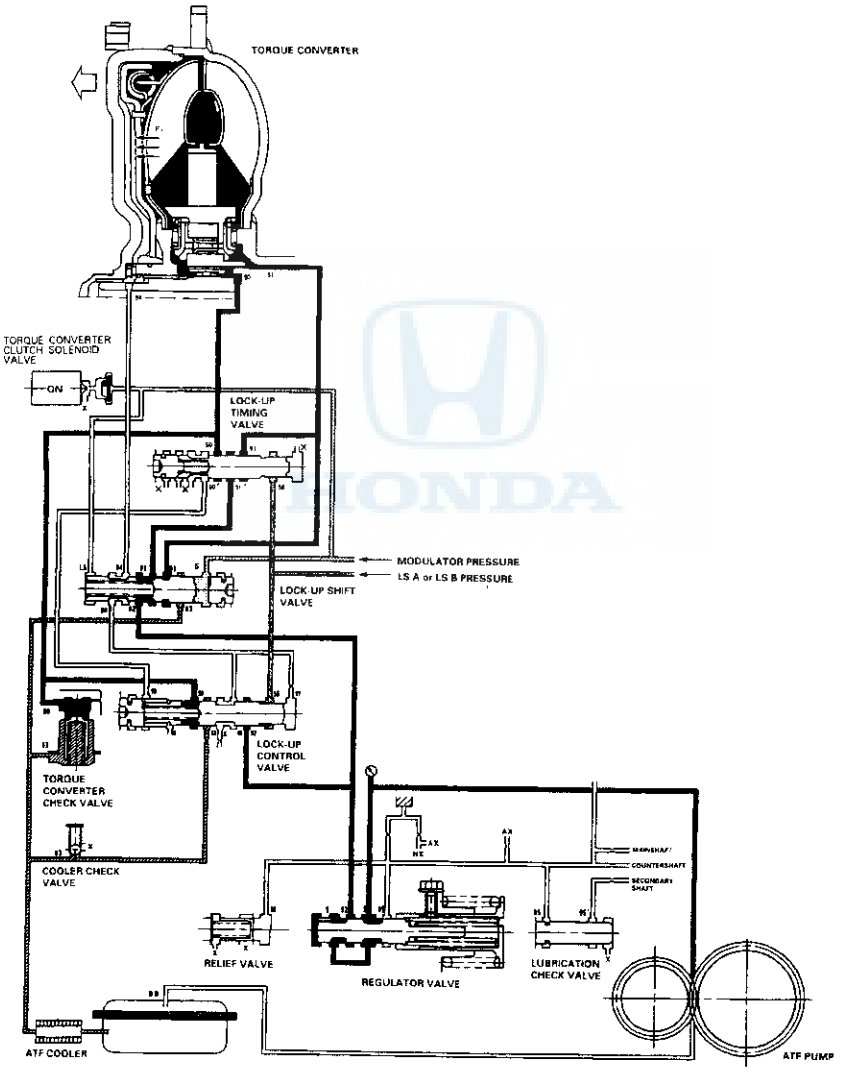

(cont'd)

System Description (cont'd)

Circuit Diagram

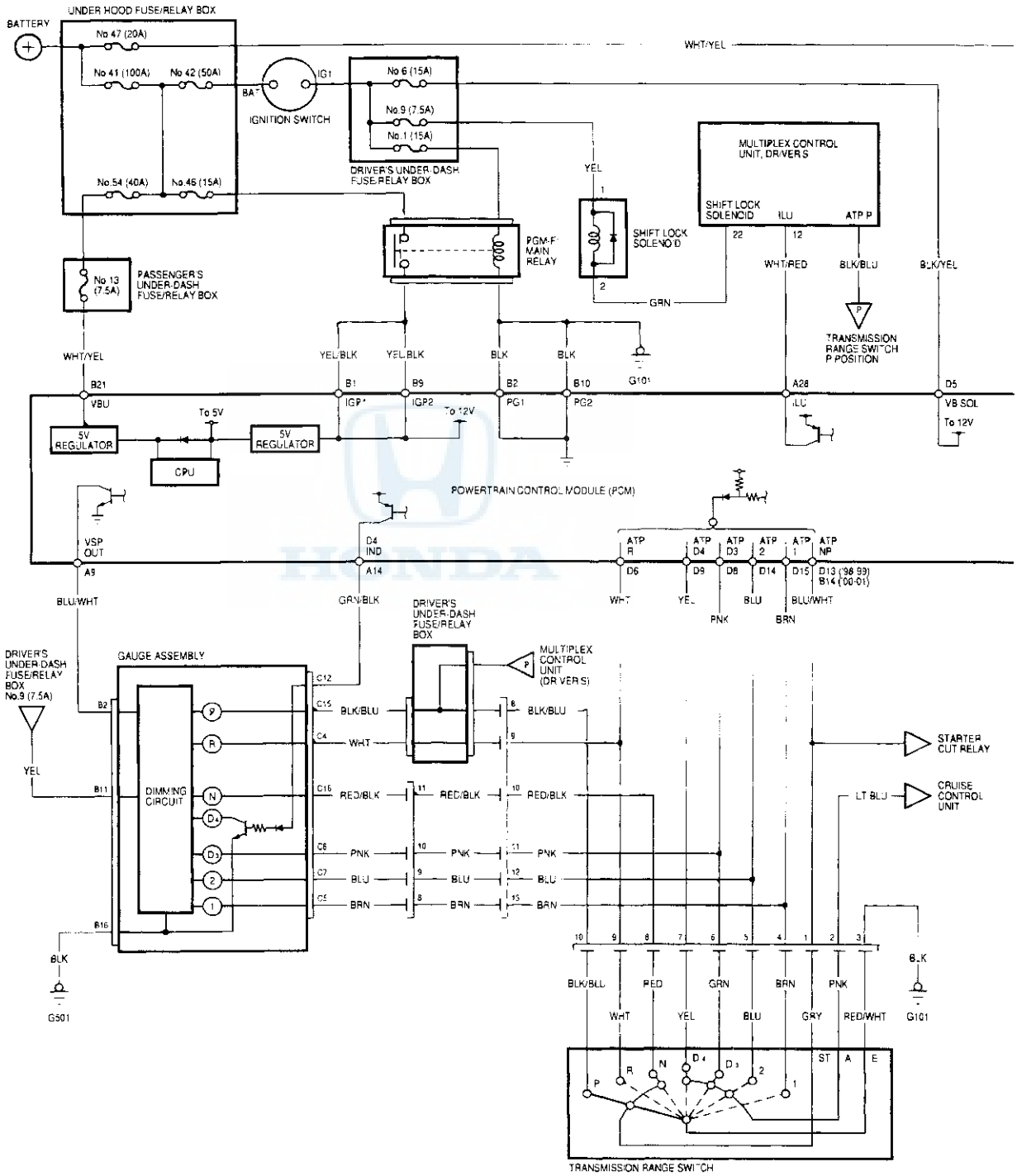

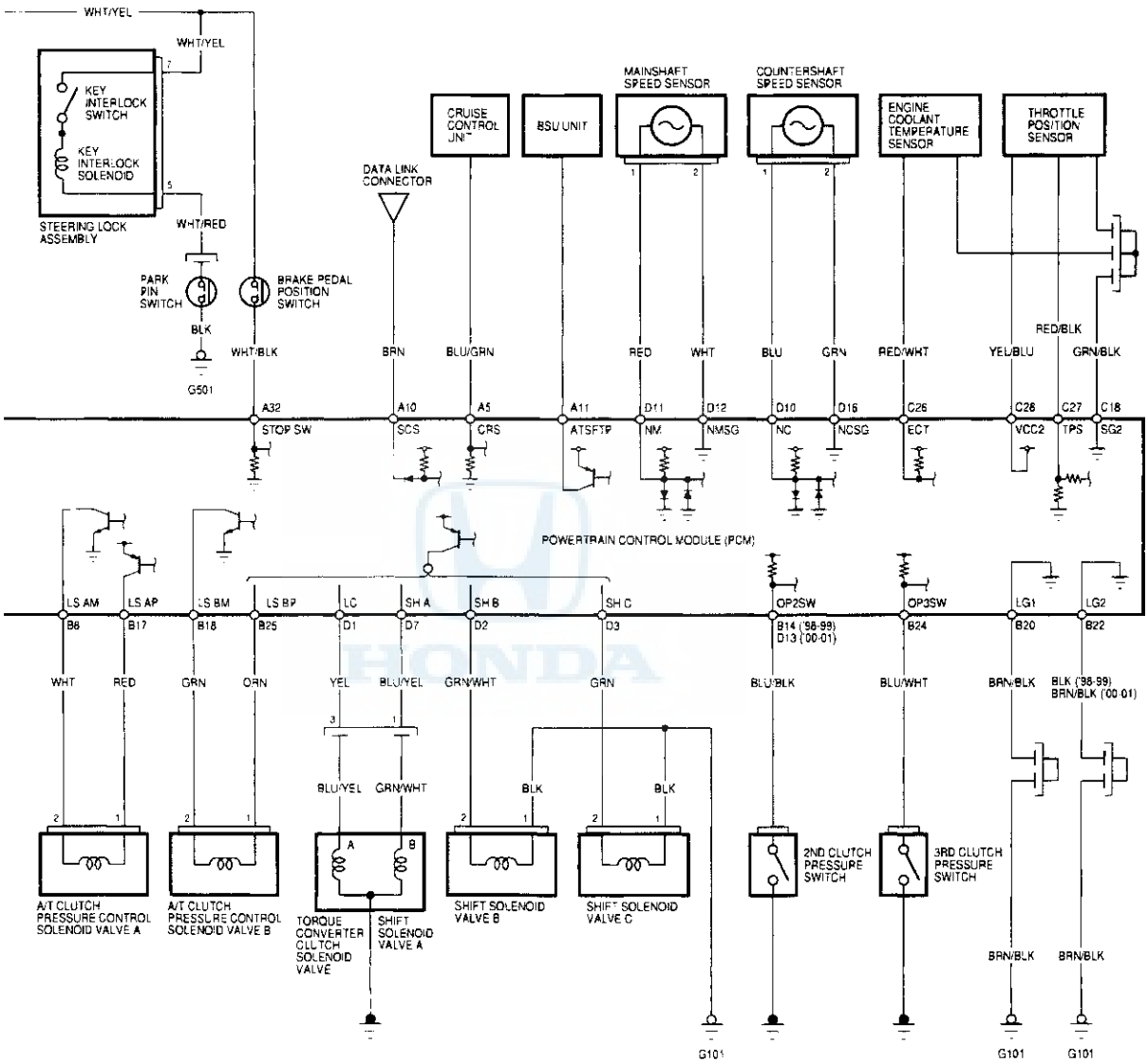

PCM Connector Terminal Locations

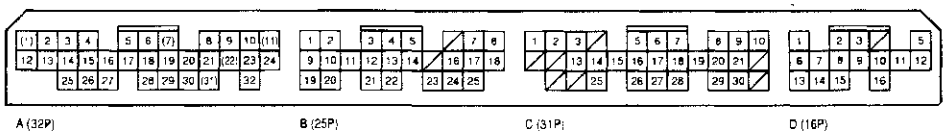

DTC Troubleshooting

DTC P1753: Problem in Torque Converter Clutch Solenoid Valve Circuit

NOTE: Record all freeze data before you troubleshoot.

1. Turn the ignition switch OFF.
2. Disconnect the B (25P) and D (16P) connectors from the PCM.
3. Turn the ignition switch ON (II).
4. Measure the voltage between the D1 and B20 or B22 terminals.

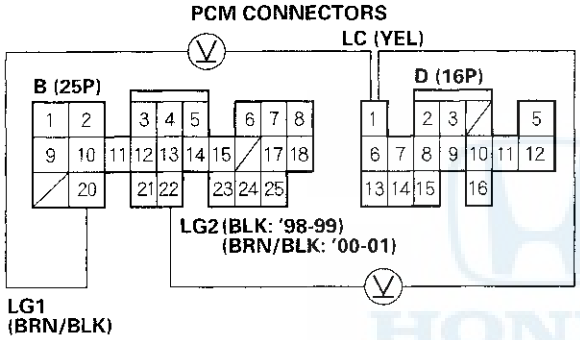

Wire side of female terminals

Is there voltage?

YES – Repair short to power in the wire between the D1 terminal and the torque converter clutch solenoid valve. ■

NO – Go to step 5.

5. Turn the ignition switch OFF.
6. Measure the resistance between the D1 and B20 or B22 terminals.

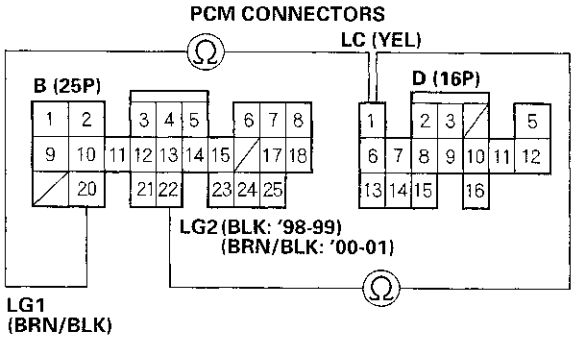

Wire side of female terminals

Is the resistance 12 – 25 Ω ?

YES – Go to step 11.

NO – Go to step 7.

7. Check for continuity between the B20 and B22 terminals and body ground.

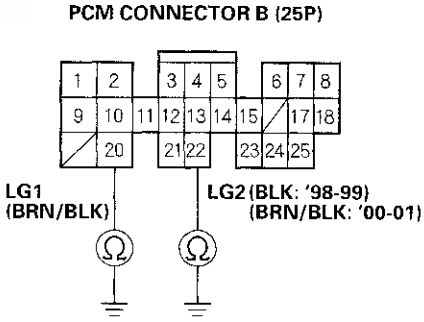

Wire side of female terminals

Is there continuity?

YES – Go to step 8.

NO – Repair open in the wires between the B20 and B22 terminals and ground (G101). ■

8. Disconnect the torque converter clutch solenoid valve/shift solenoid valve A 3P connector.

9. Check for continuity between the D1 and B20 or B22 terminals.

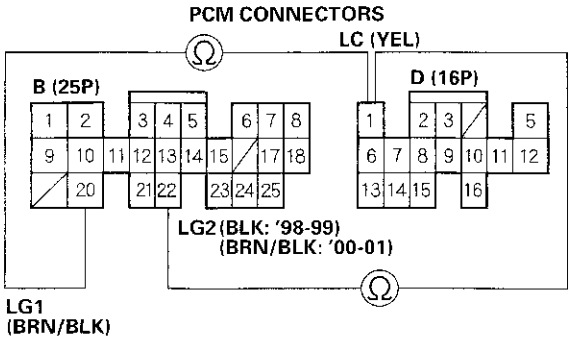

Wire side of female terminals

Is there continuity?

YES – Repair short to ground in the wire between the D1 terminal and the torque converter clutch solenoid valve. ■

NO – Go to step 10.

10. Measure the resistance between the No.3 terminal of the lock-up control solenoid valve/shift solenoid valve A connector and body ground.

TORQUE CONVERTER CLUTCH SOLENOID VALVE/ SHIFT SOLENOID VALVE A CONNECTOR (3P)

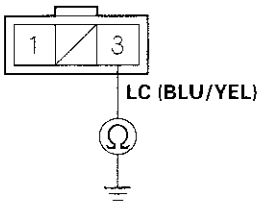

Terminal side of male terminals

Is the resistance 12–25Ω ?

YES – Check for open in the wire between the D1 terminal and the torque converter clutch solenoid valve. ■

NO – Replace the torque converter clutch solenoid valve/shift solenoid valve A. ■

11. Turn the ignition switch ON (II).

12. Measure the voltage between the D5 and B20 or B22 terminals.

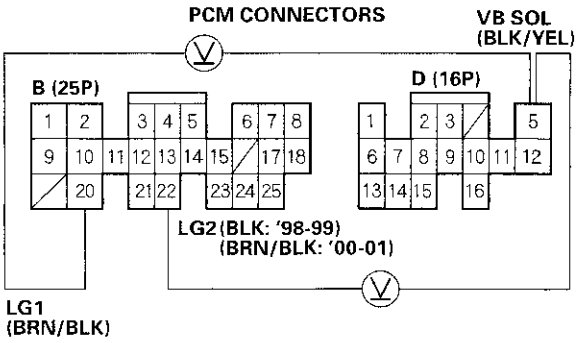

Wire side of female terminals

Is there battery voltage?

YES – Check for loose terminal fit in the PCM connectors. If necessary, substitute a known-good PCM and recheck. ■

NO – Check for blown No. 6 (15A) fuse in the driver's under-dash fuse/relay box. If the fuse is OK, repair open in the wire between the D5 terminal and the driver's under-dash fuse/relay box. ■

DTC Troubleshooting (cont'd)

DTC P1705: Short in Transmission Range Switch Circuit

NOTE: Record all freeze data before you troubleshoot.

1. Turn the ignition switch ON (II).

2. Observe the A/T gear position indicator, and shift each position separately.

   Do any indicators stay on when the shift lever is not in that position?

   YES—Go to step 3.
   NO—The system is OK at this time. Check the wire harness for damage. ■

3. Disconnect the transmission range switch connector.

   Do all gear position indicators go out?

   YES—Replace the transmission range switch. ■
   NO—Go to step 4.

4. Turn the ignition switch OFF, and connect the transmission range switch connector.

5. Turn the ignition switch ON (II).

6. Shift to all positions other than R.

7. Measure the voltage between the D6 and B20 or B22 terminals.

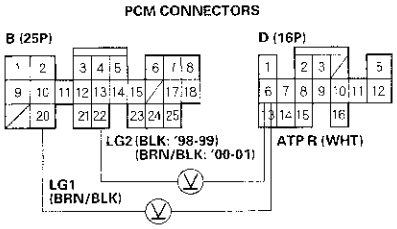

Wire side of female terminals

Is there battery voltage?

YES—Go to step 8.
NO—Check for short in the wire between the D6 terminal and the transmission range switch or A/T gear position indicator, and check for an open in the wires between the B20 and B22 terminals and body ground (G101). If wires are OK, check for loose terminal fit in the PCM connectors. If necessary, substitute a known-good PCM and recheck. ■

8. Shift to all positions other than P or N.

9. Measure ATP NP voltage between these terminals:

   - '98-99 models: Between terminals D13 and B20 or B22.
   - '00-01 models: Between terminals B14 and B20 or B22.

'98-99 models:

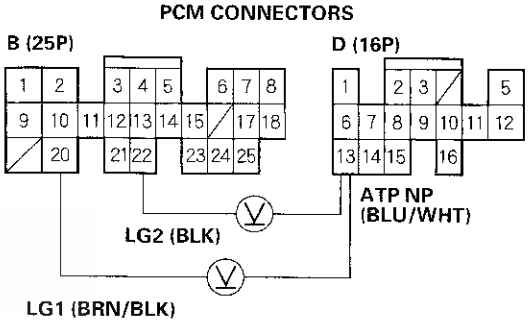

Wire side of female terminals

'00-01 models:

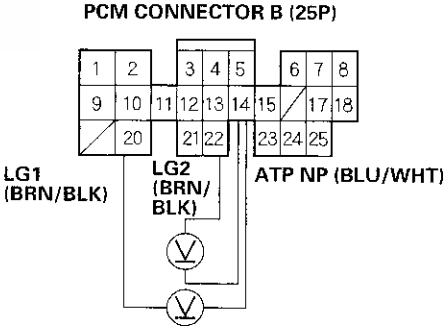

Wire side of female terminals

Is there approx. 5 V?

YES—Go to step 10.

NO—Check for short in the wire between the D13 terminal and the transmission range switch, and in the P and N position signal wires between the A/T gear position indicator and the transmission range switch. If wires are OK, check for loose terminal fit in the PCM connectors. If necessary, substitute a known-good PCM and recheck. ■

10. Shift to all positions other than D4.

11. Measure the voltage between the D9 and B20 or B22 terminals.

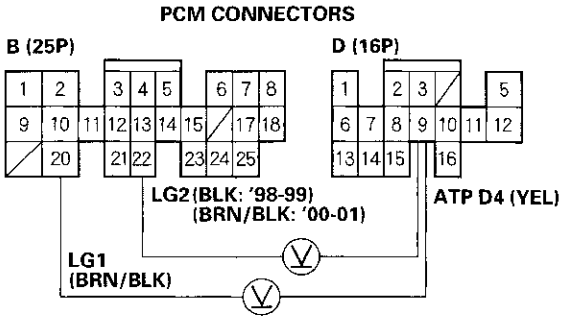

Wire side of female terminals

Is there approx. 5 V?

YES – Go to step 12.

NO – Check for short in the wire between the D9 terminal and the transmission range switch. If wire is OK, check for loose terminal fit in the PCM connectors. If necessary, substitute a known-good PCM and recheck. ■

12. Shift to all positions other than D3.

13. Measure the voltage between the D8 and B20 or B22 terminals.

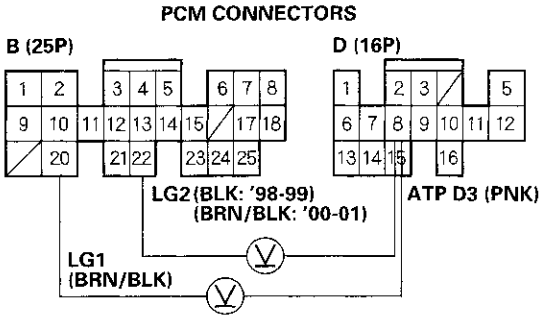

Wire side of female terminals

Is there battery voltage?

YES – Go to step 14.

NO – Check for short in the wire between the D8 terminal and the transmission range switch or A/T gear position indicator. If wires are OK, check for loose terminal fit in the PCM connectors. If necessary, substitute a known-good PCM and recheck. ■

(cont'd)

DTC Troubleshooting (cont'd)

14. Shift to all positions other than [2].

15. Measure the voltage between the D14 and B20 or B22 terminals.

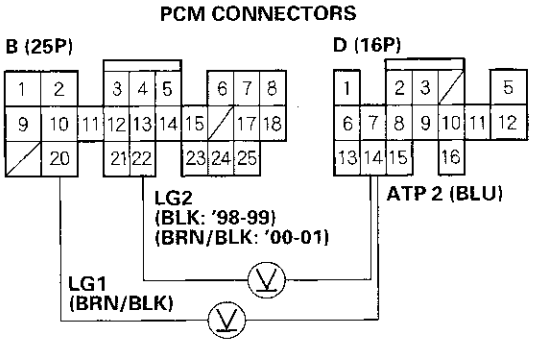

Wire side of female terminals

Is there battery voltage?

YES – Go to step 16.

NO – Check for short in the wire between the D14 terminal and the transmission range switch or A/T gear position indicator. If wires are OK, check for loose terminal fit in the PCM connectors. If necessary, substitute a known-good PCM and recheck. ■

16. Shift to all positions other than [1].

17. Measure the voltage between the D15 and B20 or B22 terminals.

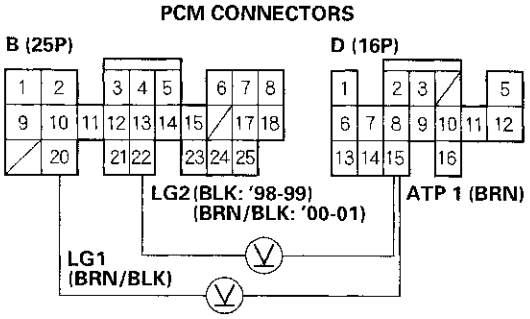

Wire side of female terminals

Is there battery voltage?

YES – Check for loose terminal fit in the PCM connectors. If necessary, substitute a known-good PCM and recheck. ■

NO – Check for short in the wire between the D15 terminal and the transmission range switch or A/T gear position indicator. If wires are OK, check for loose terminal fit in the PCM connectors. If necessary, substitute a known-good PCM and recheck. ■

DTC P1706: Open in Transmission Range Switch Circuit (no gear position inputs)

NOTE: Record all freeze data before you troubleshoot.

1. Test the transmission range switch (see page 14-140).

   Is the switch OK?

   YES – Go to step 2.

   NO – Replace the transmission range switch. ■

2. Turn the ignition switch OFF.

3. Check for continuity between the B20 and B22 terminals and body ground.

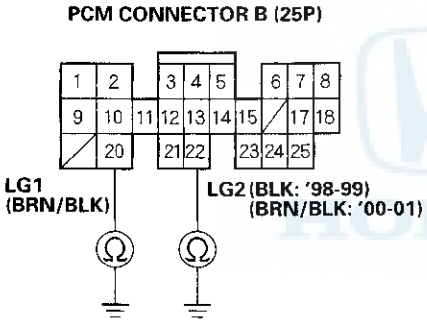

Wire side of female terminals

   Is there continuity?

   YES – Go to step 4.

   NO – Repair open in the wires between the B20 and B22 terminals and ground (G101), or repair poor ground (G101). ■

4. Turn the ignition switch ON (II).

5. Shift to D4 position.

6. Measure the voltage between the D9 and B20 or B22 terminals.

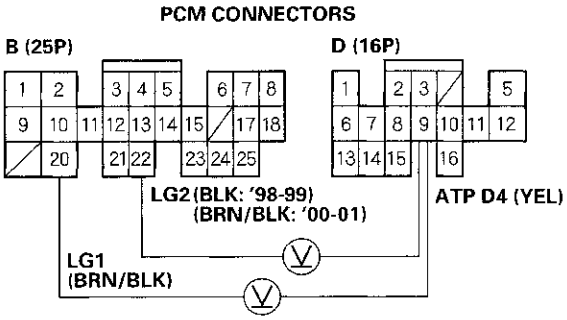

Wire side of female terminals

   Is there voltage?

   YES – Repair open in the wire between the D9 terminal and the transmission range switch. ■

   NO – Go to step 7.

7. Shift to R position.

8. Measure the voltage between the D6 and B20 or B22 terminals.

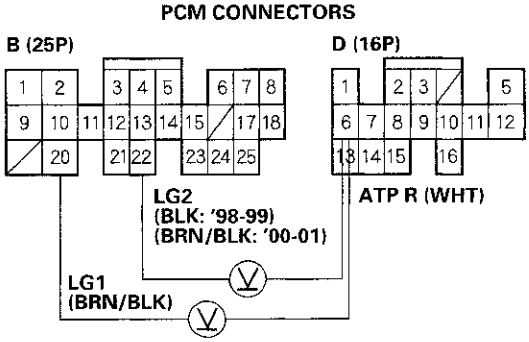

Wire side of female terminals

   Is there voltage?

   YES – Repair open in the wire between the D6 terminal and the transmission range switch. ■

   NO – Go to step 9.

9. Shift to P or N position.

(cont'd)

DTC Troubleshooting (cont'd)

10. Measure ATP NP voltage between these terminals:

    - '98-99 models: Between terminals D13 and B20 or B22.
    - '00-01 models: Between terminals B14 and B20 or B22.

'98-99 models:

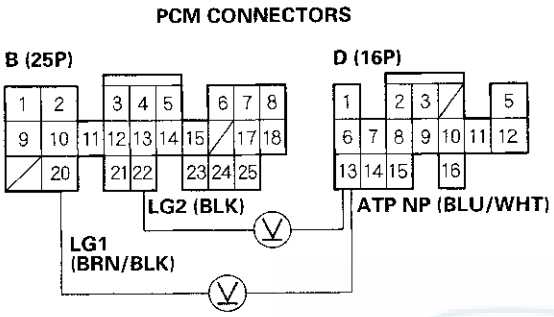

Wire side of female terminals

'00-01 models:

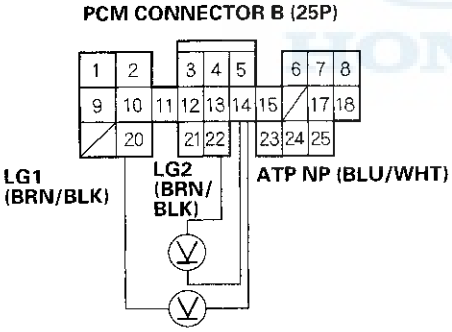

Wire side of female terminals

Is there voltage?

YES—Repair open in the wire between the D13 ('98-99) or B14 ('00-01) terminal and the transmission range switch. ■

NO—Go to step 11.

11. Shift to D3 position.

12. Measure the voltage between the D8 and B20 or B22 terminals.

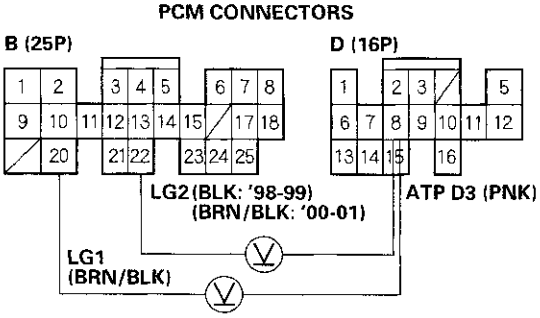

Wire side of female terminals

Is there voltage?

YES—Repair open in the wire between the D8 terminal and the transmission range switch. ■

NO—Go to step 13.

13. Shift to 2 position.

14. Measure the voltage between the D14 and B20 or B22 terminals.

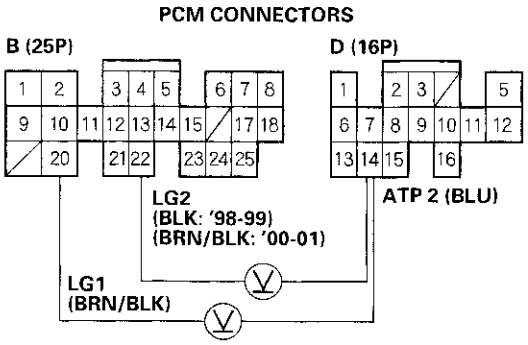

Wire side of female terminals

Is there voltage?

YES—Repair open in the wire between the D14 terminal and the transmission range switch. ■

NO—Go to step 15.

15. Shift to [1] position.

16. Measure the voltage between the D15 and B20 or B22 terminals.

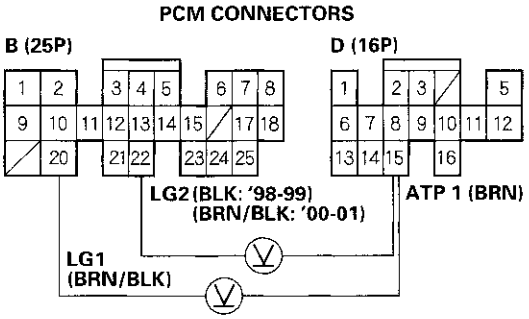

Wire side of female terminals

Is there voltage?

YES—Repair open in the wire between the D15 terminal and the transmission range switch.■

NO—Check for loose terminal fit in the PCM connectors. If necessary, substitute a known-good PCM and recheck.■

DTC Troubleshooting (cont'd)

DTC P0753: Problem in Shift Solenoid Valve A Circuit

NOTE: Record all freeze data before you troubleshoot.

1. Turn the ignition switch OFF.
2. Disconnect PCM connectors B (25P) and D (16P).
3. Turn the ignition switch ON (II).
4. Measure the voltage between the D7 and B20 or B22 terminals.

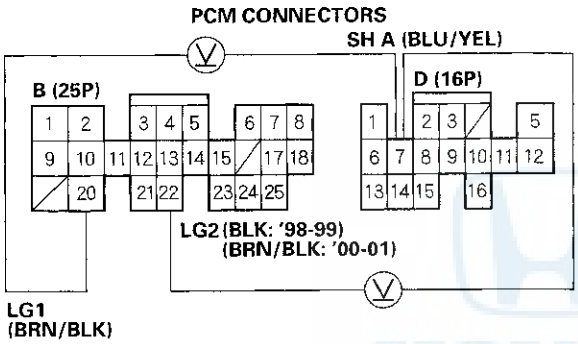

Wire side of female terminals

Is there voltage?

YES – Repair short to power in the wire between the D7 terminal and the shift solenoid valve A. ■

NO – Go to step 5.

5. Turn the ignition switch OFF.
6. Measure the resistance between the D7 and B20 or B22 terminals.

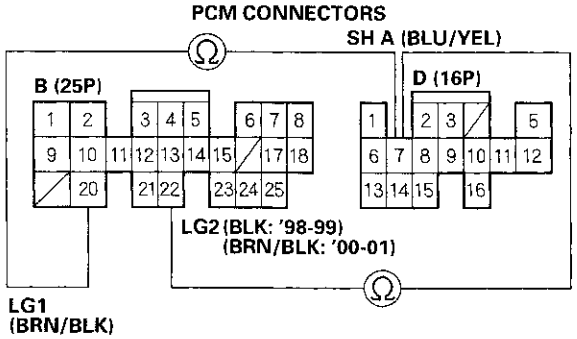

Wire side of female terminals

Is the resistance 12 – 25 Ω ?

YES – Go to step 11.

NO – Go to step 7.

7. Check for continuity between the B20 and B22 terminals and body ground.

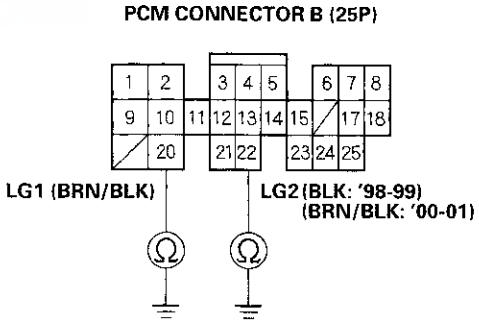

Wire side of female terminals

Is there continuity?

YES – Go to step 8.

NO – Repair open in the wires between the B20 and B22 terminals and ground (G101). ■

8. Disconnect the torque converter clutch solenoid valve/shift solenoid valve A 3P connector.

9. Check for continuity between the D7 and B20 or B22 terminals.

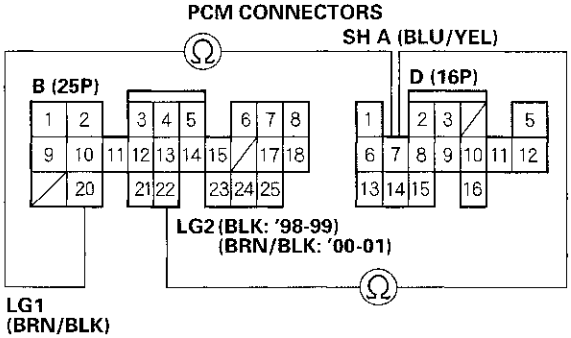

Wire side of female terminals

Is there continuity?

YES — Repair short to ground in the wire between the D7 terminal and shift solenoid valve A. ■

NO — Go to step 10.

10. Measure the resistance between the No. 1 terminal of the torque converter clutch solenoid valve/shift solenoid valve A connector and body ground.

TORQUE CONVERTER CLUTCH SOLENOID VALVE/ SHIFT SOLENOID VALVE A CONNECTOR (3P)

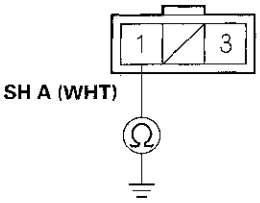

Terminal side of male terminals

Is the resistance 12 – 25 Ω ?

YES — Check for open in the wire between the D7 terminal and shift solenoid valve A. ■

NO — Replace the torque converter clutch solenoid valve/shift solenoid valve A. ■

11. Turn the ignition switch ON (II).

12. Measure the voltage between the D5 and B20 or B22 terminals.

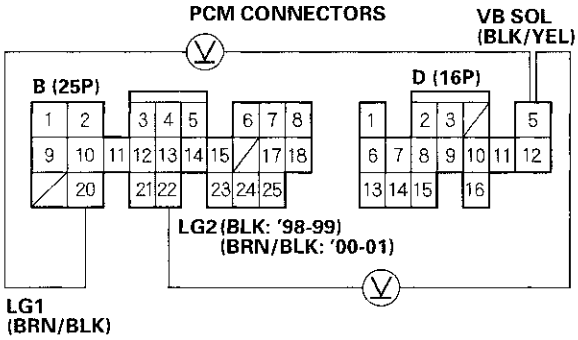

Wire side of female terminals

Is there battery voltage?

YES — Check for loose terminal fit in the PCM connectors. If necessary, substitute a known-good PCM and recheck. ■

NO — Check for blown No. 6 (15A) fuse in the driver's under-dash fuse/relay box. If the fuse is OK, repair open in the wire between the D5 terminal and the driver's under-dash fuse/relay box. ■

DTC Troubleshooting (cont'd)

DTC P0758: Problem in Shift Solenoid Valve B Circuit

NOTE: Record all freeze data before you troubleshoot.

1. Turn the ignition switch OFF.
2. Disconnect PCM connectors B (25P) and D (16P).
3. Turn the ignition switch ON (II).
4. Measure the voltage between the D2 and B20 or B22 terminals.

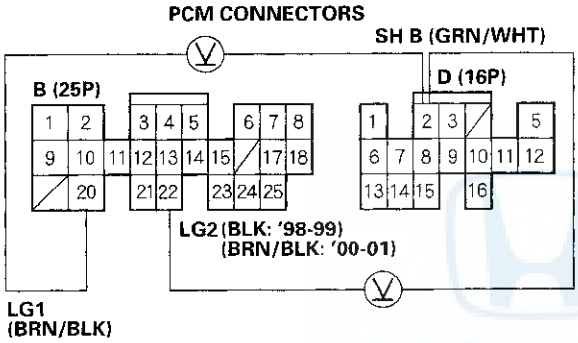

Wire side of female terminals

Is there voltage?

YES – Repair short to power in the wire between the D2 terminal and the shift solenoid valve B. ■

NO – Go to step 5.

5. Turn the ignition switch OFF.
6. Measure the resistance between the D2 and B20 or B22 terminals.

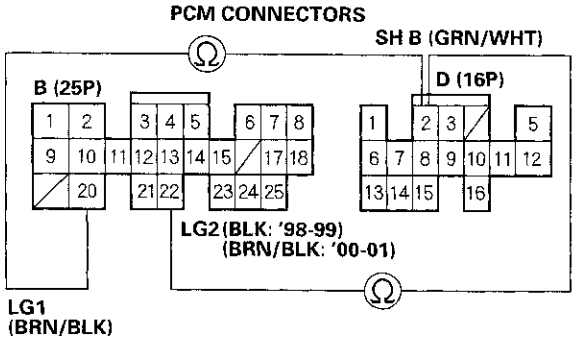

Wire side of female terminals

Is the resistance 12 – 25 Ω ?

YES – Go to step 11.

NO – Go to step 7.

7. Check for continuity between the B20 and B22 terminals and body ground individually.

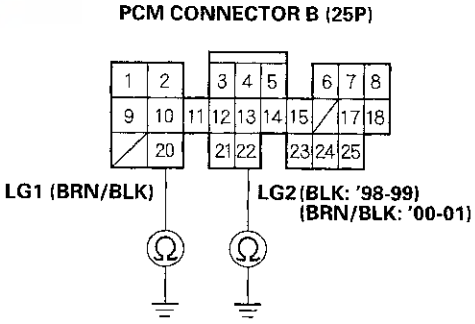

Wire side of female terminals

Is there continuity?

YES – Go to step 8.

NO – Repair open in the wires between the B20 and B22 terminals and ground (G101). ■

8. Disconnect the shift solenoid valve B 2P connector.

9. Check for continuity between the D2 and B20 or B22 terminals.

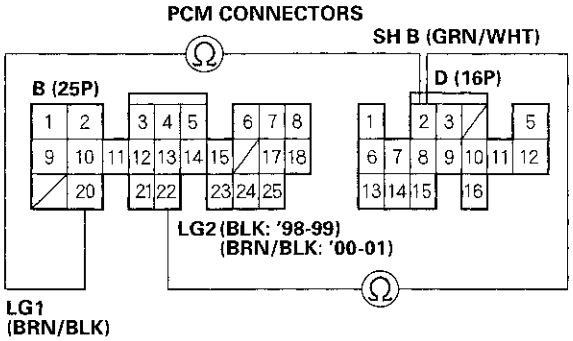

Wire side of female terminals

Is there continuity?

YES – Repair short to ground in the wire between the D2 terminal and the shift solenoid valve B. ■

NO – Go to step 10.

10. Measure shift solenoid valve B resistance at the solenoid valve connector.

SHIFT SOLENOID VALVE B CONNECTOR

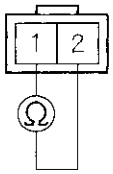

Terminal side of male terminals

Is the resistance 12– 25 Ω ?

YES – Check for open in the wires between the D2 terminal and the shift solenoid valve B and between the No. 1 terminal of the shift solenoid valve B connector and ground (G101). ■

NO – Replace the shift solenoid valve B. ■

11. Turn the ignition switch ON (II).

12. Measure the voltage between the D5 and B20 or B22 terminals.

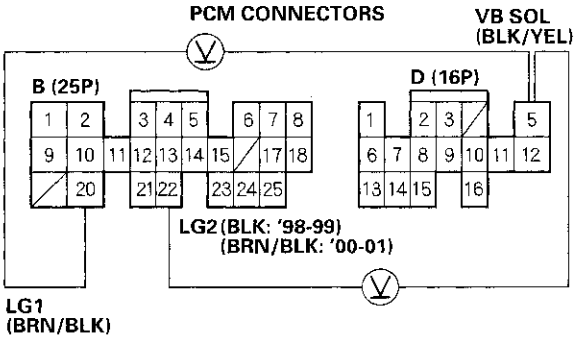

Wire side of female terminals

Is there approx. battery voltage?

YES – Check for loose terminal fit in the PCM connectors. If necessary, substitute a known-good PCM and recheck. ■

NO – Check for blown No. 6 (15A) fuse in the driver's under-dash fuse/relay box. If the fuse is OK, repair open in the wire between the D5 terminal and the driver's under-dash fuse/relay box. ■

DTC Troubleshooting (cont'd)

DTC P0720: Problem in Countershaft Speed Sensor Circuit

NOTE: Record all freeze data before you troubleshoot.

1. Check the countershaft speed sensor installation.

   Is the countershaft speed sensor installed properly?

   YES – Go to step 2.

   NO – Reinstall and recheck. ■

2. Disconnect the countershaft speed sensor 2P connector.

3. Measure countershaft speed sensor resistance at the sensor connector.

COUNTERSHAFT SPEED SENSOR CONNECTOR

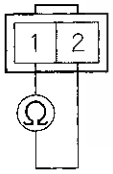

Terminal side of male terminals

Is the resistance 400– 600 Ω ?

YES – Go to step 4.

NO – Replace the countershaft speed sensor. ■

4. Disconnect PCM connector D (16P).

5. Check for continuity between body ground and the D10 terminal and D16 terminal individually.

PCM CONNECTOR D (16P)

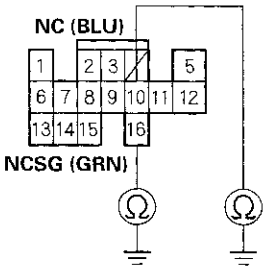

Wire side of female terminals

Is there continuity?

YES – Repair short to ground in the wires between the D10 and D16 terminals and the countershaft speed sensor. ■

NO – Go to step 6.

6. Connect the countershaft speed sensor connector.

7. Measure the resistance between the D10 and D16 terminals.

PCM CONNECTOR D (16P)

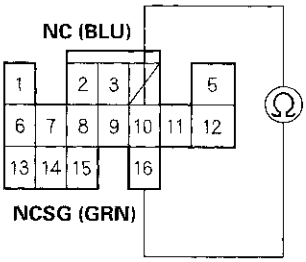

Wire side of female terminals

Is the resistance 400 600 Ω ?

YES – Check for loose terminal fit in the PCM connectors. If necessary, substitute a known-good PCM and recheck. ■

NO – Repair loose terminal or open in the wires between the D10 and D16 terminals and the countershaft speed sensor. ■

DTC P0715: Problem in Mainshaft Speed Sensor Circuit

NOTE:
- Record all freeze data before you troubleshoot.
- Code P0715 (15) on the PCM doesn't always mean there's an electrical problem in the mainshaft or countershaft speed sensor circuit; code P0715 (15) may also indicate a mechanical problem in the transmission. Any problem causing irregular countershaft to mainshaft speed difference can cause this code.

1. Check the mainshaft and countershaft speed sensor installation.

   Are the mainshaft and countershaft speed sensor installed properly?

   YES – Go to step 2.

   NO – Reinstall and recheck. ■

2. Disconnect the mainshaft speed sensor 2P connector.

3. Measure mainshaft speed sensor resistance at the sensor connector.

MAINSHAFT SPEED SENSOR CONNECTOR

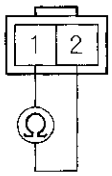

Terminal side of male terminals

Is the resistance 400–600 Ω ?

YES – Go to step 4.

NO – Replace the mainshaft speed sensor. ■

4. Disconnect PCM connector D (16P).

5. Check for continuity between body ground and the D11 terminal and D12 terminal individually.

PCM CONNECTOR D (16P)

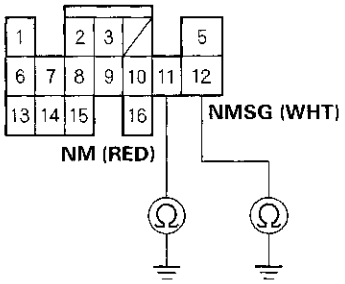

Wire side of female terminals

Is there continuity?

YES – Repair short to ground in the wires between the D11 and D12 terminals and the mainshaft speed sensor. ■

NO – Go to step 6.

6. Connect the mainshaft speed sensor connector.

7. Measure the resistance between the D11 and D12 terminals.

PCM CONNECTOR D (16P)

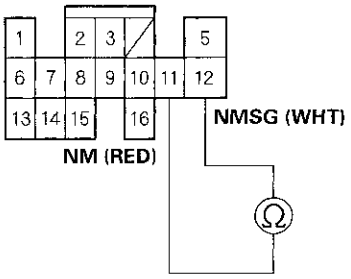

Wire side of female terminals

Is the resistance 400–600 Ω ?

YES – Run the Electrical Troubleshooting Flowchart for code P0720 (code 9). Check for loose terminal fit in the PCM connectors. If necessary, substitute a known-good PCM and recheck. ■

NO – Go to step 8.

(cont'd)

DTC Troubleshooting (cont'd)

8. Disconnect the mainshaft speed sensor 2P connector.

9. Check for continuity between the D11 terminal and the No. 1 terminal of the mainshaft speed sensor connector.

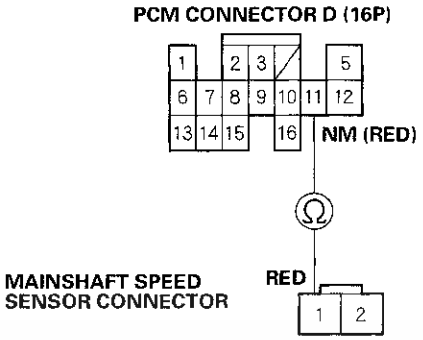

Wire side of female terminals

Is there continuity?

YES—Go to step 10.

NO—Repair open in the wire between the D11 terminal and the mainshaft speed sensor. ■

10. Check for continuity between the D12 terminal and the No. 2 terminal of the mainshaft speed sensor connector.

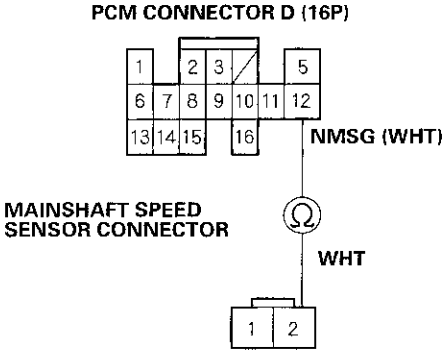

Wire side of female terminals

Is there continuity?

YES—Check for loose terminal fit in the PCM connectors. If necessary, substitute a known-good PCM and recheck. ■

NO—Repair open in the wire between the D12 terminal and the mainshaft speed sensor. ■

DTC P1768: Problem in A/T Clutch Pressure Control Solenoid Valve A Circuit

NOTE: Record all freeze data before you troubleshoot.

1. Disconnect the A/T clutch pressure control solenoid valve A 2P connector.

2. Measure A/T clutch pressure control solenoid resistance at the solenoid valve connector.

A/T CLUTCH PRESSURE CONTROL SOLENOID VALVE A CONNECTOR

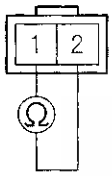

Terminal side of male terminals

Is the resistance approx. 5 Ω ?

YES—Go to step 3.
NO—Replace the A/T clutch pressure control solenoid valve A.■

3. Disconnect PCM connector B (25P).

4. Check for continuity between body ground and the B8 terminal and the B17 terminal individually.

PCM CONNECTOR B (25P)

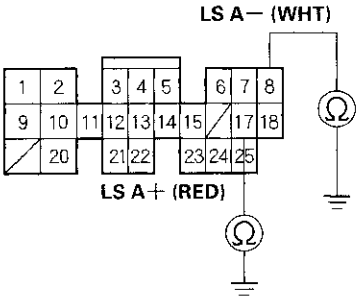

Wire side of female terminals

Is there continuity?

YES—Repair short to ground in the wires between the B8 and B17 terminals and A/T clutch pressure control solenoid valve A.■
NO—Go to step 5.

5. Connect the A/T clutch pressure control solenoid valve A connector.

6. Measure the resistance between the B8 and B17 terminals.

PCM CONNECTOR B (25P)

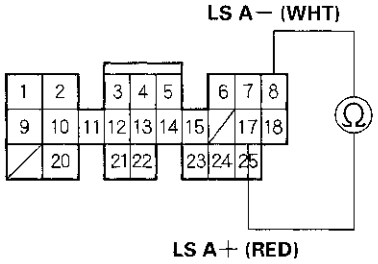

Wire side of female terminals

Is the resistance approx. 5 Ω ?

YES—Go to step 7.
NO—Repair loose terminal or open in the wires between the B8 and B17 terminals and A/T clutch pressure control solenoid valve A.■

7. Disconnect PCM connector D (16P).

8. Turn the ignition switch ON (II).

9. Measure the voltage between the D5 and B20 or B22 terminals.

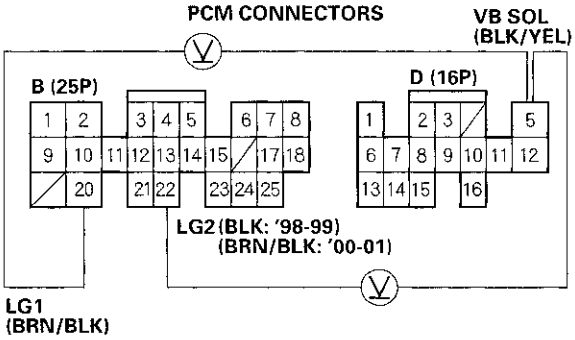

Wire side of female terminals

Is there approx. battery voltage?

YES—Go to step 10.
NO—Check for blown No. 6 (15A) fuse in the driver's under-dash fuse/relay box. If the fuse is OK, repair open in the wire between the D5 terminal and the driver's under-dash fuse/relay box.■

(cont'd)

DTC Troubleshooting (cont'd)

10. Turn the ignition switch OFF.

11. Check for continuity between the B20 and B22 terminals and body ground.

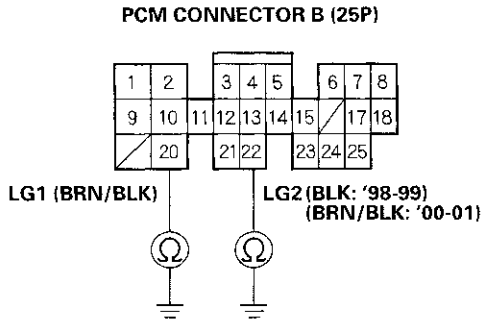

Wire side of female terminals

Is there continuity?

YES—Check for loose terminal fit in the PCM connectors. If necessary, substitute a known-good PCM and recheck. ■

NO—Repair open in the wire between the B2, B10, B20 and B22 terminals and ground (G101). Repair poor ground (G101). ■

DTC P0763: Problem in Shift Solenoid Valve C Circuit

NOTE: Record all freeze data before you troubleshoot.

1. Turn the ignition switch OFF.
2. Disconnect PCM connectors B (25P) and D (16P).
3. Turn the ignition switch ON (II).
4. Measure the voltage between the D3 and B20 or B22 terminals.

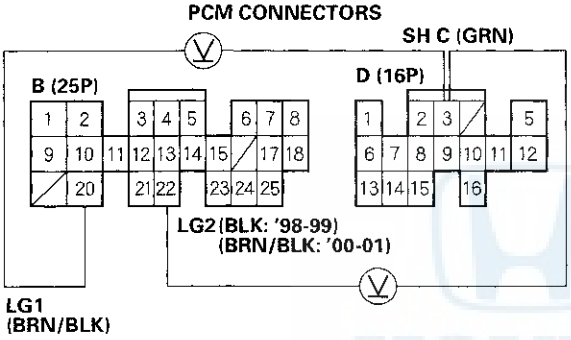

Wire side of female terminals

Is there voltage?

YES—Repair short to power in the wire between the D3 terminal and the shift solenoid valve C. ■

NO—Go to step 5.

5. Turn the ignition switch OFF.
6. Measure the resistance between the D3 and B20 or B22 terminals.

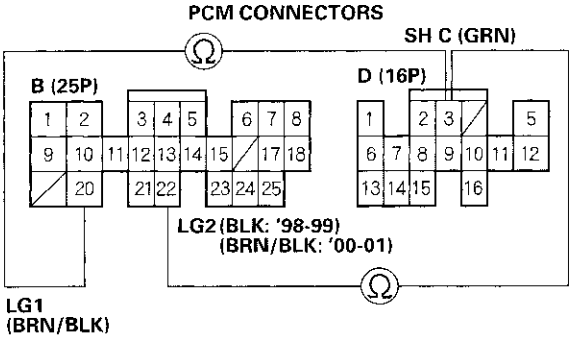

Wire side of female terminals

Is the resistance 12–25 Ω?

YES—Go to step 11.

NO—Go to step 7.

7. Check for continuity between the B20 and B22 terminals and body ground.

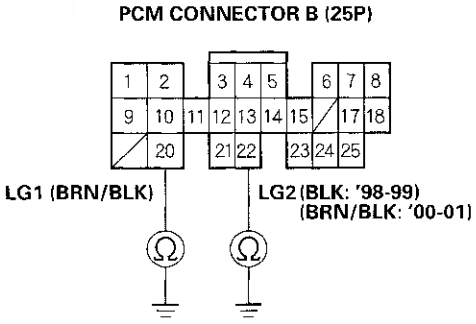

Wire side of female terminals

Is there continuity?

YES—Go to step 8.

NO—Repair open in the wires between the B20 and B22 terminals and ground (G101). ■

(cont'd)

DTC Troubleshooting (cont'd)

8. Disconnect the shift solenoid valve B 2P connector.

9. Check for continuity between the D3 and B20 or B22 terminals.

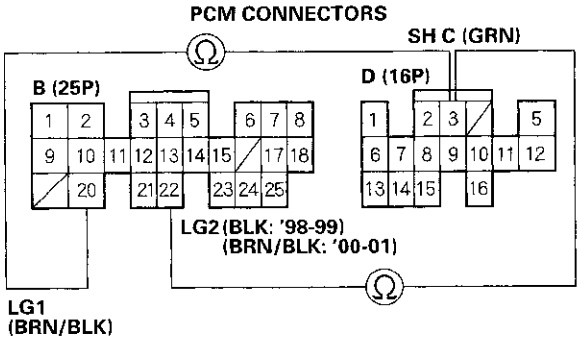

Wire side of female terminals

Is there continuity?

YES — Repair short to ground in the wire between the D3 terminal and the shift solenoid valve C. ■

NO — Go to step 10.

10. Measure shift solenoid valve C resistance at the solenoid valve connector.

SHIFT SOLENOID VALVE C CONNECTOR

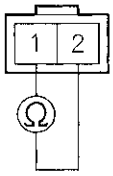

Terminal side of male terminals

Is the resistance 12—25 Ω ?

YES — Check for open in the wires between the D3 terminal and the shift solenoid valve C and between the No. 1 terminal of the shift solenoid valve C connector and ground (G101). ■

NO — Replace shift solenoid valve C. ■

11. Turn the ignition switch ON (II).

12. Measure the voltage between the D5 and B20 or B22 terminals.

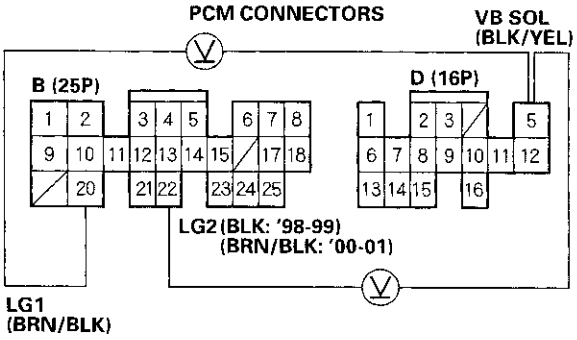

Wire side of female terminals

Is there approx. battery voltage?

YES — Check for loose terminal fit in the PCM connectors. If necessary, substitute a known-good PCM and recheck. ■

NO — Check for blown No. 6 (15A) fuse in the driver's under-dash fuse/relay box. If the fuse is OK, repair open in the wire between the D5 terminal and the driver's under-dash fuse/relay box. ■

DTC P1773: Problem in A/T Clutch Pressure Control Solenoid Valve B Circuit

NOTE: Record all freeze data before you troubleshoot.

1. Disconnect the A/T clutch pressure control solenoid valve B 2P connector.

2. Measure A/T clutch pressure control solenoid resistance at the solenoid valve connector.

A/T CLUTCH PRESSURE CONTROL SOLENOID VALVE B CONNECTOR

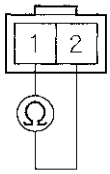

Terminal side of male terminals

Is the resistance approx. 5 Ω ?

YES Go to step 3.

NO – Replace the A/T clutch pressure control solenoid valve B.■

3. Disconnect PCM connector B (25P).

4. Check for continuity between body ground and the B18 terminal and the B25 terminal individually.

PCM CONNECTOR B (25P)

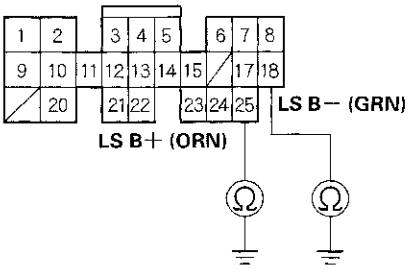

Wire side of female terminals

Is there continuity?

YES – Repair short to ground in the wires between the B18 and B25 terminals and A/T clutch pressure control solenoid valve B.■

NO – Go to step 5.

5. Connect the A/T clutch pressure control solenoid valve B 2P connector.

6. Measure the resistance between the B18 and B25 terminals.

PCM CONNECTOR B (25P)

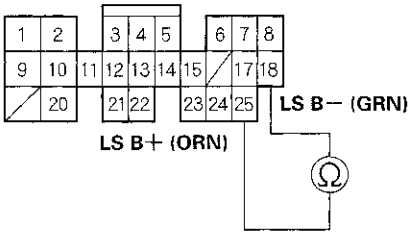

Wire side of female terminals

Is the resistance approx. 5 Ω ?

YES – Go to step 7.

NO – Repair loose terminal or open in the wires between the B18 and B25 terminals and A/T clutch pressure control solenoid valve B.■

(cont'd)

DTC Troubleshooting (cont'd)

7. Disconnect PCM connector D (16P).

8. Turn the ignition switch ON (II).

9. Measure the voltage between the D5 and B20 or B22 terminals.

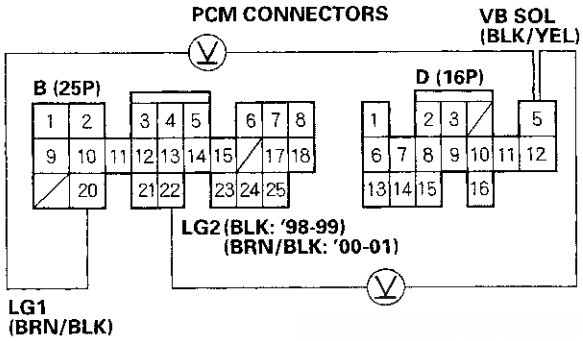

Wire side of female terminals

Is there approx. battery voltage?

YES – Go to step 10.

NO – Check for blown No. 6 (15A) fuse in the driver's under-dash fuse/relay box. If the fuse is OK, repair open in the wire between the D5 terminal and the driver's under-dash fuse/relay box. ■

10. Turn the ignition switch OFF.

11. Check for continuity between the B20 and B22 terminals and body ground individually.

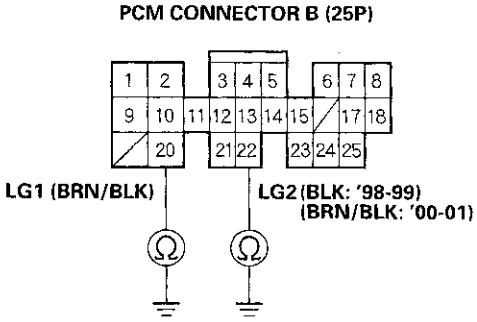

Wire side of female terminals

Is there continuity?

YES – Check for loose terminal fit in the PCM connectors. If necessary, substitute a known-good PCM and recheck. ■

NO – Repair open in the wire between the B2, B10, B20 and B22 terminals and ground (G101). Repair poor ground (G101). ■

DTC P1738: Problem in 2nd Clutch Pressure Switch Circuit

NOTE: Record all freeze data before you troubleshoot.

1. Turn the ignition switch ON (II).
2. Measure OP2SW voltage between these terminals.
   - '98-99 models: Terminals B14 and B20 or B22.
   - '00-01 models: Terminals D13 and B20 or B22.

'98-99 models:

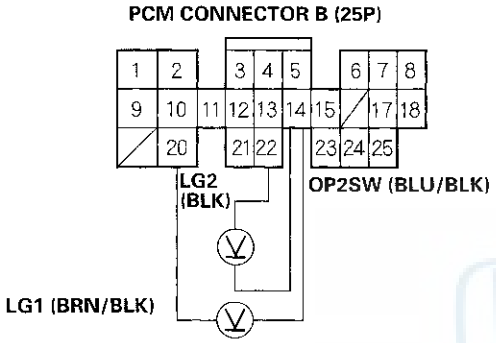

Wire side of female terminals

'00-01 models:

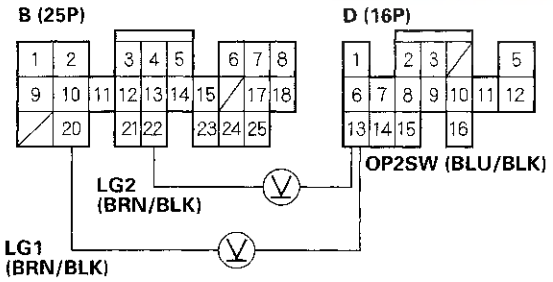

Wire side of female terminals

Is there battery voltage?

YES – Go to step 7.

NO Go to step 3.

3. Turn the ignition switch OFF.
4. Disconnect PCM connector B (25P) ('98-99) or D (16P) ('00-01).
5. Disconnect the 2nd clutch pressure switch connector.
6. Check OP2SW for continuity to ground:
   - '98-99 models: Between B14 terminal and body ground.
   - '00-01 models: Between D13 terminal and body ground.

'98-99 models:

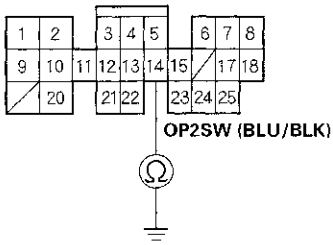

Wire side of female terminals

'00-01 models:

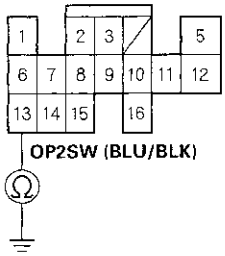

Wire side of female terminals

Is there continuity?

YES – Repair short to ground in the wire between the B14 ('98-99) or D13 ('00-01) terminal and the 2nd clutch pressure switch. ■

NO – Check for loose terminal fit in the PCM connectors. If necessary, substitute a known-good PCM and recheck. ■

(cont'd)

DTC Troubleshooting (cont'd)

7. Raise the front of the vehicle, and make sure it is securely supported.

8. Set the parking brake, and block rear wheels securely.

9. Start the engine, then shift to [2] position and drive for more than five seconds.

10. Measure OP2SW voltage between these terminals:

    - '98-99 models: Terminals B14 and B20 or B22.
    - '00-01 models: Terminals D13 and B20 or B22.

    '98-99 models:

    PCM CONNECTOR B (25P)

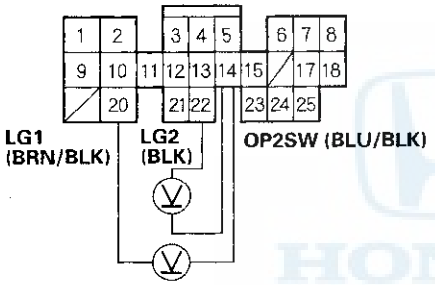

Wire side of female terminals

    '00-01 models:

    PCM CONNECTORS

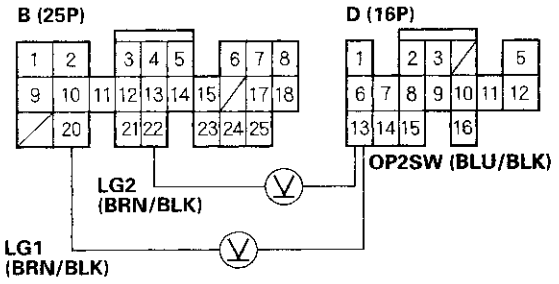

Wire side of female terminals

    Is there approx. 0 V?

    YES – Check for loose terminal fit in the PCM connectors. If necessary, substitute a known-good PCM and recheck. ■

    NO – Go to step 11.

11. Turn the ignition switch OFF.

12. Disconnect the 2nd clutch pressure switch connector.

13. Turn the ignition switch ON (II).

14. Measure the voltage between the 2nd clutch pressure switch connector terminal and body ground.

    2ND CLUTCH PRESSURE SWITCH CONNECTOR

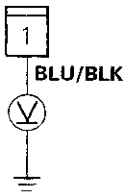

Wire side of female terminal

    Is there approx. battery voltage?

    YES – Go to step 15.

    NO – Repair open in the wire between the 2nd clutch pressure switch and the PCM. ■

15. Measure the resistance between the 2nd clutch pressure switch connector terminal and body ground.

    2ND CLUTCH PRESSURE SWITCH CONNECTOR

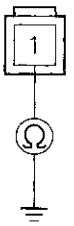

Terminal side of male terminals

    Is the resistance 10 MΩ or more?

    YES – Check for loose terminal fit in the PCM connectors. If necessary, substitute a known-good PCM and recheck. ■

    NO – Replace the 2nd clutch pressure switch. ■

DTC P1739: Problem in 3rd Clutch Pressure Switch Circuit

NOTE: Record all freeze data before you troubleshoot.

1. Turn the ignition switch ON (II).
2. Measure the voltage between the B24 and B20 or B22 terminals.

PCM CONNECTOR B (25P)

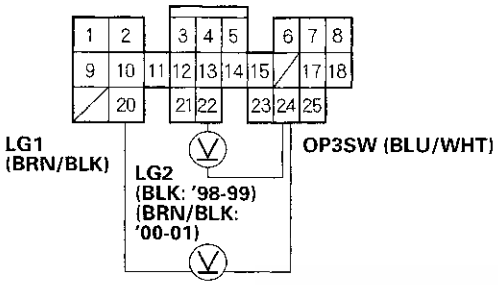

Wire side of female terminals

Is there battery voltage?

YES – Go to step 7.

NO – Go to step 3.

3. Turn the ignition switch OFF.
4. Disconnect PCM connector B (25P).
5. Disconnect the 3rd clutch pressure switch connector.
6. Check for continuity between the B24 terminal and body ground.

PCM CONNECTOR B (25P)

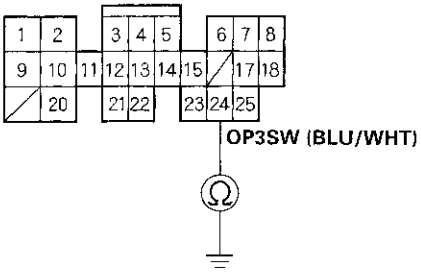

Wire side of female terminals

Is there continuity?

YES – Repair short to ground in the wire between the B24 terminal and the 3rd clutch pressure switch. ■

NO – Check for loose terminal fit in the PCM connectors. If necessary, substitute a known-good PCM and recheck. ■

(cont'd)

DTC Troubleshooting (cont'd)

7. Raise the front of the vehicle, and make sure it is securely supported.

8. Set the parking brake, and block rear wheels securely.

9. Start the engine, then shift to D3 position and drive in 3rd gear for more than five seconds.

10. Measure the voltage between the B24 and B20 or B22 terminals.

PCM CONNECTOR B (25P)

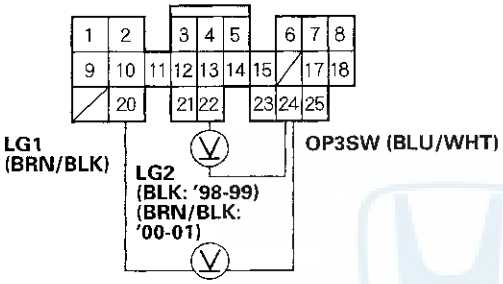

Wire side of female terminals

Is there approx. 0 V?

YES—Check for loose terminal fit in the PCM connectors. If necessary, substitute a known-good PCM and recheck.■

NO—Go to step 11.

11. Turn the ignition switch OFF.

12. Disconnect the 3rd clutch pressure switch connector.

13. Turn the ignition switch ON (II).

14. Measure the voltage between the 3rd clutch pressure switch connector terminal and body ground.

3RD CLUTCH PRESSURE SWITCH CONNECTOR

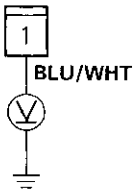

Wire side of female terminal

Is there battery voltage?

YES—Go to step 15.

NO—Repair open in the wire between the 3rd clutch pressure switch and the PCM.■

15. Measure the resistance between the 3rd clutch pressure switch connector terminal and body ground.

3RD CLUTCH PRESSURE SWITCH CONNECTOR

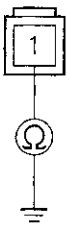

Terminal side of male terminal

Is the resistance 10 MΩ or more?

YES—Check for loose terminal fit in the PCM connectors. If necessary, substitute a known-good PCM and recheck.■

NO—Replace the 3rd clutch pressure switch.■

DTC P0740: Problem in Lock-up Control System

NOTE: Record all freeze data before you troubleshoot.

1. Check whether the OBD II scan tool indicates another code.

   Does the OBD II scan tool indicate another code?

   YES—Perform the Troubleshooting Flowchart for the indicated Code(s). Recheck for code P0740 after troubleshooting. ■

   NO—Go to step 2.
   NOTE: Do not continue with this troubleshooting until the causes of any other DTCs have been corrected.

2. Measure the line pressure.

   Is the line pressure within the service limit?

   YES—Go to step 3.

   NO—Repair the hydraulic system as necessary (see page 14-104). ■

3. Replace the torque converter clutch solenoid valve (lock-up control solenoid valve)/shift solenoid valve A (see page 14-106).

4. Replace the A/T clutch pressure control solenoid valves A and B (see page 14-109).

5. Turn the ignition switch OFF and reset the PCM memory by removing the BACK UP fuse in the passenger's under-dash fuse/relay box for more than 10 seconds.

6. Using the scan tool, check to be sure that the engine coolant temperature is in 176°F (80°C) and above.

7. Drive the vehicle at 55 mph (88 km/h) constantly for more than one minute.

8. Recheck for code P0740.

   Does the OBD II scan tool indicate code P0740?

   YES—Replace the transmission and torque converter. ■

   NO—The system is OK at this time. ■

DTC Troubleshooting (cont'd)

DTC P0730: Problem in Shift Control System

NOTE: Record all freeze data before you troubleshoot.

1. Check whether the OBD II scan tool indicates another code.

   Does the OBD II scan tool indicate another code?

   YES—Perform the Troubleshooting Flowchart for the indicated Code(s). Recheck for code P0730 after troubleshooting. ■

   NO—Go to step 2.
   NOTE: Do not continue with this troubleshooting until the causes of any other DTCs have been corrected.

2. Measure the 1st, 2nd, 3rd, and 4th clutch pressure (see page 14-104).

   Is each clutch pressure within the service limit?

   YES—Go to step 3.

   NO—Repair the hydraulic system as necessary. ■

3. Replace the torque converter clutch solenoid valve (lock-up control solenoid valve)/shift solenoid valve A (see page 14-106).

4. Replace the shift solenoid valves B and C (see page 14-107).

5. Replace the A/T clutch pressure control solenoid valves A and B (see page 14-109).

6. Turn the ignition switch OFF and reset the PCM memory by removing the BACK UP fuse in the passenger's under-dash fuse/relay box for more than 10 seconds.

7. Drive the vehicle at a speed over 12 mph (20 km/h) in 1st, 2nd, 3rd, 4th gear in D4 position for more than 30 seconds.

8. Recheck for code P0730.

   Does the OBD II scan tool indicate code P0730?

   YES—Replace the transmission. ■

   NO—The system is OK at this time. ■

DTC P0780: Mechanical Problem in Hydraulic Control System for Shift Solenoid Valve A and A/T Clutch Pressure Control Solenoid Valves A and B, or Problem in Hydraulic Control System

NOTE: Record all freeze data before you troubleshoot.

1. Check whether the OBD II scan tool indicates another code.

   Does the OBD II scan tool indicate another code?

   YES – Perform the Troubleshooting Flowchart for the indicated Code(s). Recheck for code P0780 after troubleshooting. ■

   NO – Go to step 2.

2. Turn the ignition switch OFF.

3. Replace the torque converter clutch solenoid valve/ shift solenoid valve A assembly (see page 14-106), and the A/T clutch pressure control solenoid valves A and B assembly (see page 14-109).

4. Reset the PCM memory by removing the BACK UP fuse in the passenger's under-dash fuse relay box for more than 10 seconds.

5. Drive the vehicle for several minutes in 1st, 2nd, 3rd, and 4th gears in D4 position.

6. Recheck for code P0780.

   Does the OBD II scan tool indicate code P0780?

   YES – Replace the transmission. ■

   NO – The problem has been corrected. ■

DTC Troubleshooting (cont'd)

DTC P1750: Mechanical Problem in Hydraulic Control System for A/T Clutch Pressure Control Solenoid Valves A and B, or Problem in Hydraulic Control System

NOTE: Record all freeze data before you troubleshoot.

1. Check whether the OBD II scan tool indicates another code.

   Does the OBD II scan tool indicate another code?

   YES – Perform the Troubleshooting Flowchart for the indicated Code(s). Recheck for code P1750 after troubleshooting. ■

   NO – Go to step 2.

2. Turn the ignition switch OFF.

3. Replace the A/T clutch pressure control solenoid valves A and B (see page 14-109).

4. Reset the PCM memory by removing the BACK UP fuse in the passenger's under-dash fuse relay box for more than 10 seconds.

5. Drive the vehicle for several minutes in 1st, 2nd, 3rd, and 4th gears in D4 position.

6. Recheck for code P1750.

   Does the OBD II scan tool indicate code P1750?

   YES – Replace the transmission. ■

   NO – The problem has been corrected. ■

DTC P1751: Mechanical Problem in Hydraulic Control System for Shift Solenoid Valve B and A/T Clutch Pressure Control Solenoid Valves A and B, or Problem in Hydraulic Control System

NOTE: Record all freeze data before you troubleshoot.

1. Check whether the OBD II scan tool indicates another code.

   Does the OBD II scan tool indicate another code?

   YES – Perform the Troubleshooting Flowchart for the indicated Code(s). Recheck for code P1751 after troubleshooting. ■

   NO – Go to step 2.

2. Turn the ignition switch OFF.

3. Replace the shift solenoid valve B (see page 14-107), and the A/T clutch pressure control solenoid valves A and B (see page 14-109).

4. Drive the vehicle for several minutes in 1st, 2nd, 3rd, and 4th gears in D4 position.

5. Recheck for code P1751.

   Does the OBD II scan tool indicate code P1751?

   YES – Replace the transmission. ■

   NO – The problem has been corrected. ■

D4 Indicator Light Circuit Troubleshooting

1. Turn the ignition switch ON (II), and watch the D4 indicator light.

   Does the D4 indicator light come on and stay on?

   YES – Go to step 2.

   NO – If the light comes on for about two seconds and then goes off, it's OK. If it doesn't come on at all, go to step 11.

2. Turn the ignition switch OFF.

3. Disconnect PCM connector A (32P).

4. Turn the ignition switch ON (II).

5. Measure the voltage between the A14 terminal and body ground.

PCM CONNECTOR A (32P)

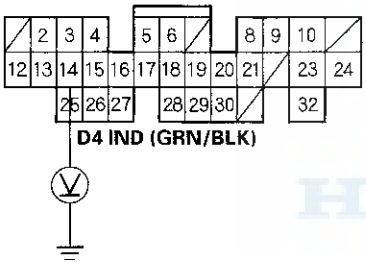

Wire side of female terminals

   Is there voltage?

   YES – Repair short to power in the wire between the A14 terminal and the gauge assembly. ■

   NO – Go to step 6.

6. Turn the ignition switch OFF.

7. Reconnect PCM connector A (32P).

8. Turn the ignition switch ON (II).

9. Shift to any position other than D4.

10. Measure the voltage between the D9 terminal and body ground.

PCM CONNECTOR D (16P)

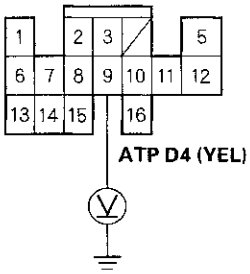

Wire side of female terminals

   Is there approx. 5 V?

   YES – Faulty PCM or the gauge assembly. ■

   NO – Check for short to ground in the wire between the D9 terminal and the transmission range switch. If wire is OK, check the transmission range switch. ■

11. Make sure the Honda PGM Tester is not connected to the DLC.

12. Shift to D4 position.

    Does the D4 indicator light come on?

    YES – Check for loose terminal fit in the PCM connectors and recheck the D4 indicator light several times. If the problem is intermittent, substitute a known-good PCM and recheck. If the light then works OK every time, replace the original PCM. ■

    NO – Go to step 13.

13. Turn the ignition switch OFF.

(cont'd)

D4 Indicator Light Circuit Troubleshooting (cont'd)

14. Disconnect PCM connector B (25P).

15. Check for continuity between body ground and B20 and B22 terminals.

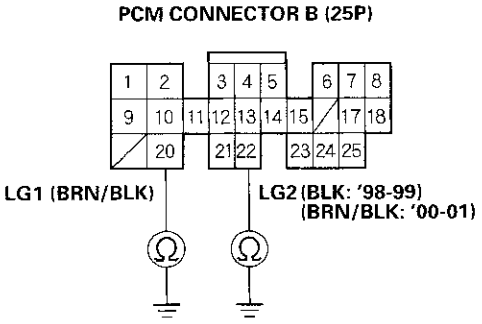

Wire side of female terminals

Is there continuity between ground and each terminal?

YES – Go to step 16.

NO – Repair open in the wire(s) between the B20 or B22 terminal and ground (G101). ■

16. Turn the ignition switch ON (II).

17. Measure the voltage between terminals B1 and B22, and between terminals B9 and B20.

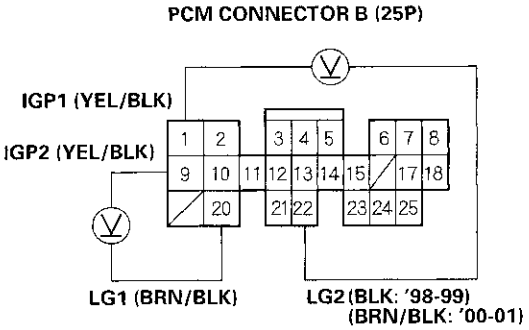

Wire side of female terminals

Is there battery voltage?

YES – Go to step 18.

NO – Repair open or short in the wire between the B1 or B9 terminal and the PGM-FI main relay and from fuse No. 46 in the under-hood fuse/relay box to the PGM-FI main relay. ■

18. Turn the ignition switch OFF.

19. Reconnect PCM connector B (25P).

20. Connect the digital multimeter between the A14 and B20 or B22 terminals.

21. Turn the ignition switch ON (II).

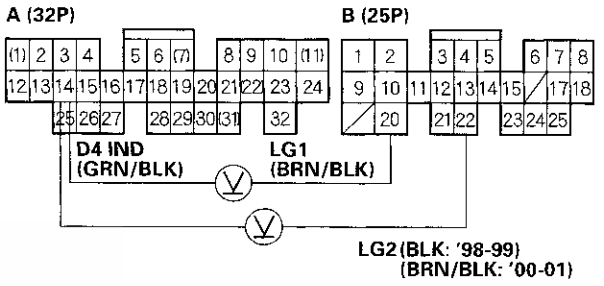

Wire side of female terminals

Is there voltage for at least 2 seconds?

YES – Check for open in the wire between the A14 terminal and the gauge assembly. If wire is OK, check for a faulty D4 indicator light bulb or a faulty printed circuit board in the gauge assembly. ■

NO – Go to step 22.

22. Turn the ignition switch OFF.

23. Disconnect PCM connector A (32P).

24. Check for continuity between the A14 terminal and No. 12 terminal of the gauge assembly C (16P) connector.

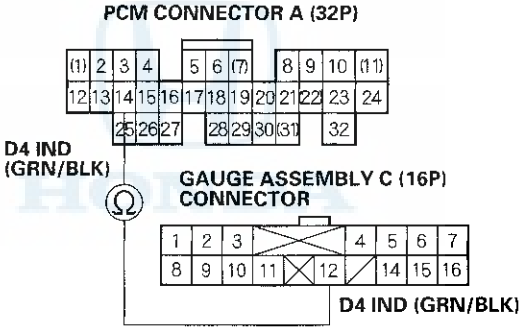

Wire side of female terminals

Is there continuity?

YES Check for loose terminal fit in the PCM connectors. Check the transmission range switch. If necessary, substitute a known-good PCM and recheck. ■

NO—Repair open in the wire between the A14 terminal and the gauge assembly. ■

Interlock System - Shift Lock System Circuit Troubleshooting

1. Press the brake pedal.

   Are the brake lights ON?

   YES – Go to step 2.

   NO – Repair faulty brake light circuit, refer to the '98-01 Accord Service Manual (see page 19-8). ■

2. Turn the ignition switch ON (II), and shift to [P] position.

3. Press the brake pedal, and release the accelerator pedal.

4. Measure the voltage between the A28 terminal and body ground.

PCM CONNECTOR A (32P)

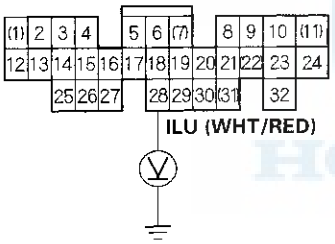

Wire side of female terminals

Is there battery voltage?

YES – Go to step 5.

NO – Go to step 8.

5. Measure the voltage between the B12 terminal of the multiplex control unit, driver's B (22P) connector and body ground with the throttle released and the brake pedal pressed.

MULTIPLEX CONTROL UNIT, DRIVER'S B (22P) CONNECTOR

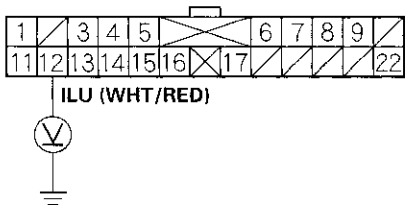

Wire side of female terminals

Is there battery voltage?

YES – Go to step 6.

NO – Repair open in the wire between the A28 terminal of the PCM and B12 terminal of the driver's multiplex control unit. ■

6. Measure the voltage between the B22, terminal of the multiplex control unit, driver's B (22P) connector and body ground.

MULTIPLEX CONTROL UNIT, DRIVER'S B (22P) CONNECTOR

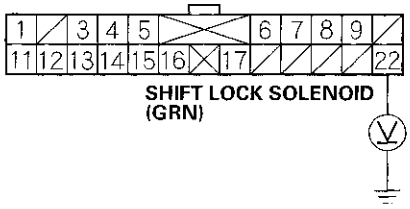

Wire side of female terminals

Is there battery voltage?

YES – Go to step 7.

NO – Repair open in the wire between the B22 terminal of the driver's multiplex control unit and the driver's under-dash fuse No. 9 (via the shift lock solenoid). ■

7. Turn the ignition switch ON (II), and move the shift lever to [P] position.

   Dose the [P] indicator in the gauge assembly illuminate?

   YES – Check for loose terminal fit to the driver's multiplex control unit B12 and B22 terminal wires. If necessary, substitute a known-good driver's multiplex control unit. ■

   NO – Repair open in the [P] position switch circuit from the driver's under-dash fuse/relay box K10 (BLK/BLU) wire to ground (G101). ■

8. Turn the ignition switch OFF.

9. Disconnect PCM connectors A (32P) and B (25P).

10. Measure the voltage between the A32 and B20 or B22 terminals while pressing the brake pedal.

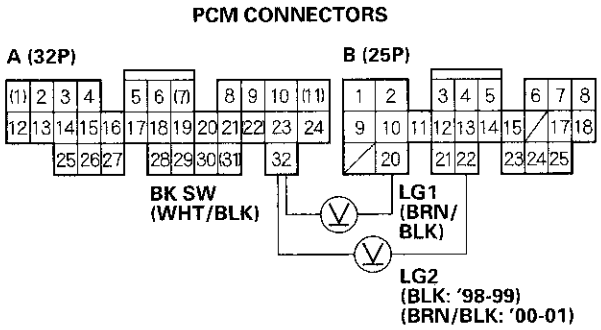

Wire side of female terminals

   Is there battery voltage?

   YES – Go to step 11.

   NO – Repair open in the wire between the A32 terminal and the brake pedal position switch (brake switch). ■

(cont'd)

Interlock System - Shift Lock System Circuit Troubleshooting (cont'd)

11. Reconnect PCM connectors A (32P) and B (25P).

12. Turn the ignition switch ON (II).

13. Measure the voltage between the C27 and B20 or B22 terminals.

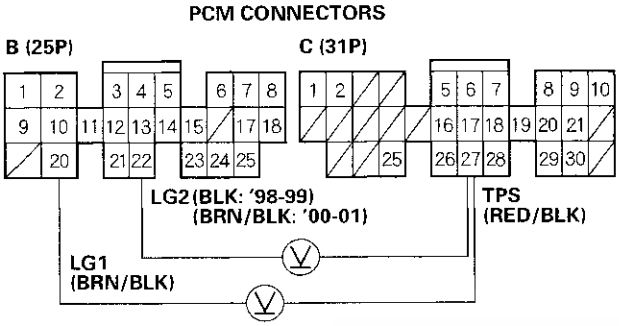

Wire side of female terminals

Is there approx. 0.5 V (throttle fully closed)?

YES — Check for loose terminal fit in the PCM connectors. If necessary, substitute a known-good PCM and recheck. ■

NO — Go to step 14.

14. Turn the ignition switch OFF.

15. Disconnect the throttle position sensor connector.

16. Check for continuity between the No. 1 terminal of the throttle position sensor and the B20 or B22 terminal of the PCM.

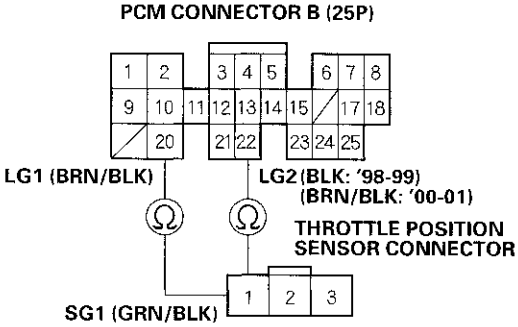

Wire side of female terminals

Is there continuity?

YES — Replace the throttle body. ■

NO — Go to step 17.

17. Check for continuity between the C18 and B20 or B22 terminals.

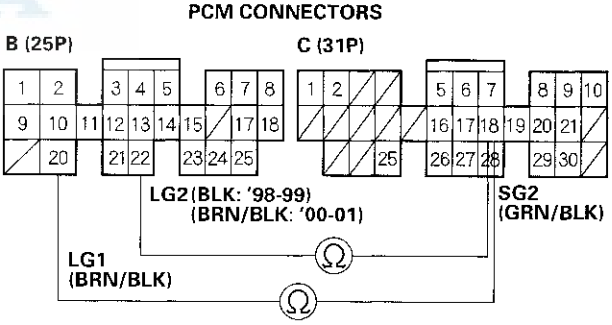

Wire side of female terminals

Is there continuity?

YES — Repair open in the wire between the C18 terminal and the throttle position sensor. ■

NO — Check for loose terminal fit in the PCM connectors. If necessary, substitute a known-good PCM and recheck. ■

1. Check the A/T shift cable adjustment (see page 14-136).

2. Disconnect the key switch 7P connector from the steering lock assembly.

3. Connect the No. 7 terminal of the key switch connector to the battery positive terminal, and connect the No. 5 terminal to the battery negative terminal.

KEY SWITCH CONNECTOR (7P)

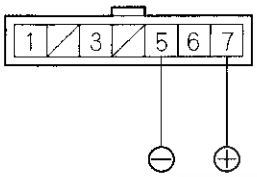

Terminal side of male terminals

4. Turn the ignition switch to ACC (I), then push the ignition key.

5. Check the key interlock solenoid operation. A clicking sound should be heard while pushing the ignition key, and no sound should be heard when releasing the key.

   Does the key interlock solenoid operate properly?

   YES—Go to step 6.

   NO –Faulty key interlock solenoid/switch. Replace the ignition key cylinder/steering lock assembly.■

   NOTE: Do not re-key the new ignition switch. Re-key the other lock cylinder to match the new switch.

6. Measure the voltage between the No. 7 terminal and body ground.

KEY SWITCH CONNECTOR (7P)

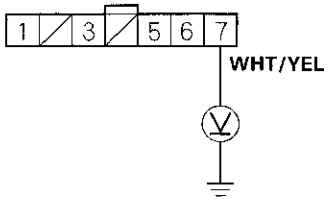

Wire side of female terminals

Is there battery voltage?

YES—Go to step 7.

NO Check for blown No. 47 (20A) fuse in the unde r-hood fuse/relay box. If the fuse is OK, repair open or short in the wire between the No. 7 terminal of the key switch connector and under-hood fuse/ relay box.■

7. Disconnect the park pin switch 4P connector on the front side of the shift lever.

8. With the shift lever in Park, check for continuity between the No. 3 and No. 4 terminals of the park pin switch 4P connector.

PARK PIN SWITCH 4P CONNECTOR

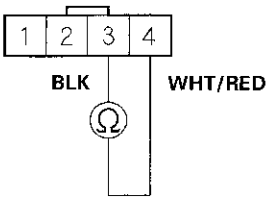

Wire side of female terminals

Is there continuity?

YES- Go to step 9.

NO—Repair open in the wires between the park pin switch and the 4P connector. If wires are OK, replace the park pin switch.■

(cont'd)

Interlock System - Key Interlock System Circuit Troubleshooting (cont'd)

9. Check for continuity between the No. 4 terminal of the park pin switch 4P connector and the No. 5 terminal of the key switch connector.

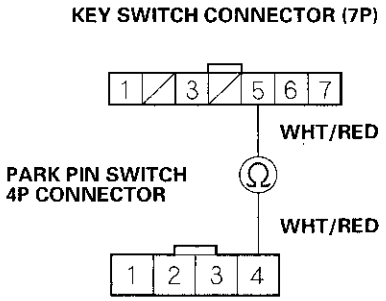

Wire side of female terminals

Is there continuity?

YES – Go to step 10.

NO – Repair open in the wire between No. 4 terminal of the park pin switch 4P connector and the No. 5 terminal of the key switch connector. ■

10. Check for continuity between the No. 3 terminal of the 4P connector and body ground.

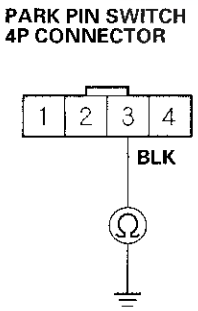

Wire side of female terminals

Is there continuity?

YES Check for loose key switch connector and park pin switch connector. If necessary, substitute a known-good steering lock assembly. ■

NO Repair open in the wire between the No. 3 terminal of the 4P connector and ground (G101). ■

Road Test

Special Tools Required
Backprobe set 07SAZ-001000A (Two required)

1. Warm up the engine to normal operating temperature (the radiator fan comes on).

2. Apply the parking brake, and block rear wheels. Start the engine, then shift to D4 position while pressing the brake pedal. Press the accelerator pedal, and release it suddenly. The engine should not stall.

3. Repeat the same test in D3 position.

4. Connect the Honda PGM Tester (A), and go to the PGM-FI Data List; then go to step 1. If you don't have a PGM Tester, go to step 5.

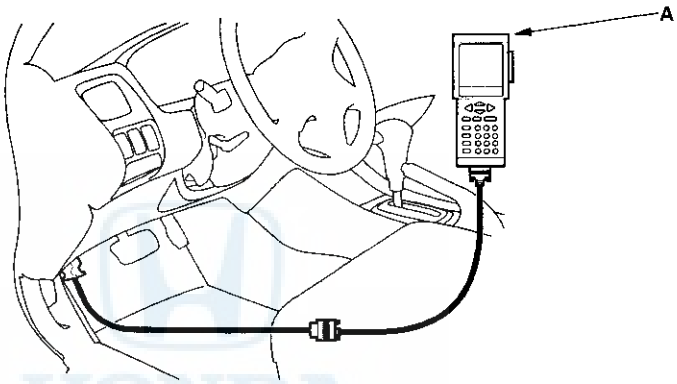

5. Pull back the carpet from the passenger's side of the center console to expose the PCM (A).

6. Connect the digital multimeter (B) and the special tools (C) to check voltage between the C27 (+) terminal and B20 (~) or B22 (−) terminal of the PCM.

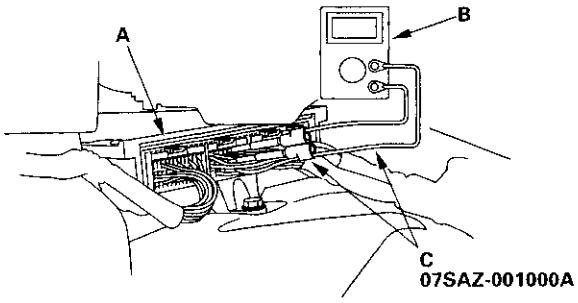

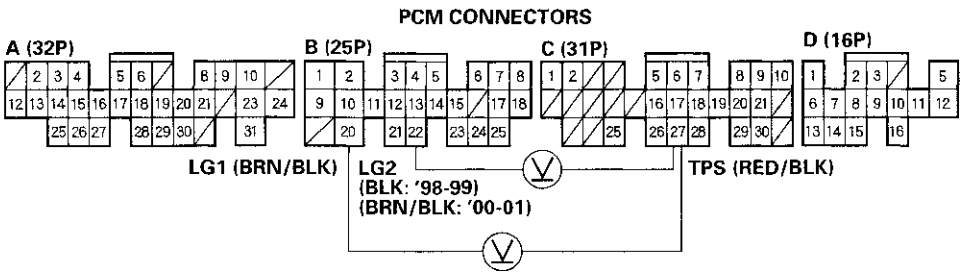

Wire side of female terminals

(cont'd)

Road Test (cont'd)

7. Test-drive the vehicle on a flat road in the D4 position. Check for abnormal noise and clutch slippage. While driving, check that the shift points occur at the proper speeds by monitoring the throttle position sensor voltage and comparing your shift point speeds and voltage to those in the table. (The throttle position sensor voltage represents the throttle opening.)

Upshift-D4 position

Throttle Opening	Unit of Speed	1st → 2nd	2nd → 3rd	3rd → 4th	Lock-up ON
Throttle position sensor voltage: 0.7 V	mph	9 – 10	21 – 23	30 – 34	45 – 48
	km/h	14 – 16	33 – 37	48 – 54	73 – 77
Throttle position sensor voltage: 2.25 V	mph	24 – 27	45 – 48	65 – 68	77 – 81
	km/h	39 – 43	72 – 78	104 – 110	124 – 130
Fully-opened throttle. Throttle position sensor voltage: 4.5 V	mph	35 – 39	65 – 68	98 – 101	99 – 103
	km/h	57 – 63	104 – 110	157 – 163	160 – 166

Downshift-D4 position

Throttle Opening	Unit of Speed	Lock-up OFF	4th → 3rd	3rd → 2nd	2nd → 1st
Throttle position sensor voltage: 0.8 V	mph	44 – 47	17 – 19	———	6 – 8 (3rd → 1st)
	km/h	71 – 75	27 – 31	———	9 – 13 (3rd → 1st)
Throttle position sensor voltage: 2.25 V	mph	68 – 71	———	———	———
	km/h	109 – 115	———	———	———
Fully-opened throttle. Throttle position sensor voltage: 4.5 V	mph	90 – 94	89 – 92	54 – 58	27 – 31
	km/h	145 – 151	142 – 148	87 – 93	44 – 50

8. Accelerate to about 35 mph (57 km/h) so the transmission is in 4th, then shift from D4 position to 2 position. The vehicle should immediately begin slowing down from engine braking.

9. Check for abnormal noise and clutch slippage in the following positions.

   1 (1st Gear) Position
   Accelerate from a stop at full throttle. Check that there is no abnormal noise or clutch slippage. Upshifts should not occur with the shift lever in this position.

   2 (2nd Gear) Position
   Accelerate from a stop at full throttle. Check that there is no abnormal noise or clutch slippage. Upshifts and downshifts should not occur with the shift lever in this position.

   R (Reverse) Position
   Accelerate from a stop at full throttle, and check that there is no abnormal noise or clutch slippage.

10. Test in P (Park) Position.
    Park the vehicle on a slope (approx. 16°), apply the parking brake, and shift into P position. Release the brake; the vehicle should not move.

Stall Speed Test

1. Set the parking brake, and block the front wheels.
2. Connect a tachometer to the engine, and start the engine.
3. Make sure the A/C switch is OFF.
4. After the engine has warmed up to normal operating temperature (the radiator fan comes on), shift to [2] position.
5. Fully press the brake pedal and accelerator for 6 to 8 seconds, and note engine speed. Do not move the shift lever while raising engine speed.
6. Allow two minutes for cooling, then repeat the test in [D4], [1], and [R] positions.

NOTE:
- Do not test stall speed for more than 10 seconds at a time.
- Stall speed tests should be used for diagnostic purposes only.
- Stall speed should be the same in [D4], [2], [1], and [R] positions.
- Do not test stall speed with the A/T pressure gauges installed.

Stall Speed rpm:
Specification: 2,400 rpm
Service Limit: 2,250 - 2,550 rpm

TROUBLE	PROBABLE CAUSE
Stall rpm high in [D4], [2], [1], and [R] positions	• Low fluid level or ATF pump output • Clogged ATF strainer • Pressure regulator valve stuck closed • Slipping clutch
Stall rpm high in [1] position	Slippage of 1st clutch
Stall rpm high in [2] position	Slippage of 2nd clutch
Stall rpm high in [R] position	Slippage of 4th clutch
Stall rpm low in [D4], [2], [1], and [R] positions	• Engine output low • Torque converter one-way clutch slipping

Pressure Tests

Special Tools Required
- A/T oil pressure gauge set 07406-0020400
- A/T pressure hose, 2210 mm 07MAJ-PY4011A
- A/T pressure hose adapter 07MAJ-PY40120

1. Before testing, be sure the transmission fluid is filled to the proper level.
2. Raise the front of the vehicle, and make sure it is securely supported.
3. Set the parking brake, and block rear wheels securely.
4. Allow the front wheels to rotate freely.
5. Warm up the engine (the radiator fan comes on), then stop it and connect the tachometer.
6. Connect the oil pressure gauges to each inspection hole securely, and do not allow dust or other foreign particles to enter the holes.

   TORQUE: 18 N·m (1.8 kgf·m, 13 lbf·ft)

A/T OIL PRESSURE GAUGE SET W/PANEL 07406-0020400

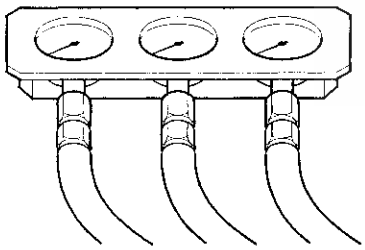

A/T PRESSURE HOSE, 2210 mm 07MAJ-PY4011A (4 Required)

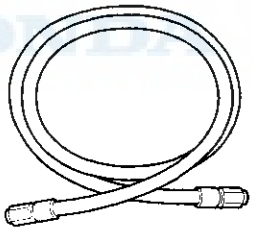

A/T PRESSURE HOSE ADAPTER 07MAJ-PY40120 (4 Required)

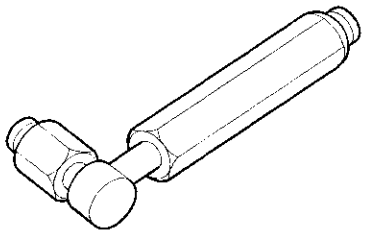

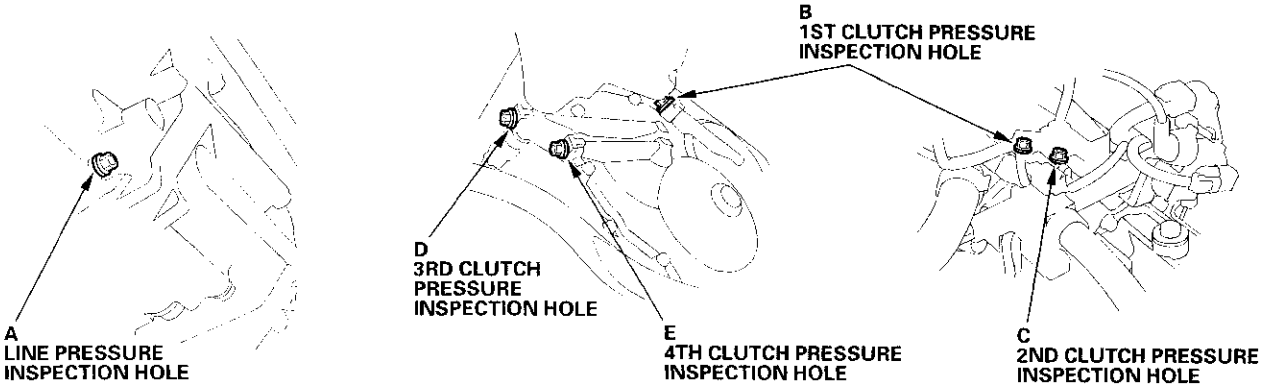

7. Start the engine, and run it at 1,500 rpm.

8. Shift to N or P position, and measure line pressure at line pressure inspection hole (A).

   NOTE: Higher pressure may be indicated if measurements are made in shift lever positions other than N or P.

9. Shift to 1 position, and measure 1st clutch pressure at the 1st clutch pressure inspection hole (B).

10. Shift to 2 position, and measure 2nd clutch pressure at the 2nd clutch pressure inspection hole (C).

11. Shift to P position, then press the brake pedal and hold it.

12. Shift to D4 position, and release the brake pedal (the transmission is in 1st gear).

13. Accelerate the engine to 2,500 rpm (the transmission will be shifted to 2nd gear).

14. Release the accelerator for more than 5 seconds after the transmission is shifted to 2nd gear, the engine speed will decrease to about 1,000 rpm.

15. Press the accelerator very slowly (so it takes at least 5 seconds to raise the engine speed to 2,000rpm), then hold the engine speed at 2,000 rpm.

16. Measure 3rd and 4th clutch pressure at the 3rd clutch pressure inspection hole (D), and the 4th clutch pressure inspection hole (E), as the transmission will shifted 2nd gear to 3rd gear, then to 4th gear.

PRESSURE	SHIFT LEVER POSITION	SYMPTOM	PROBABLE CAUSE	FLUID PRESSURE	
				Standard	Service Limit
Line (A)	N or P	No (or low) line pressure	Torque converter, ATF pump, pressure regulator valve, torque converter check valve	800 860 kPa (8.2 – 8.8 kgf/cm², 120 – 130 psi)	760 kPa (7.7 kgf/cm², 110 psi)
1st clutch (B)	1	No or low 1st pressure	1st clutch	790 – 870 kPa (8.1 – 8.9 kgf/cm², 120 – 130 psi)	750 kPa (7.6 kgf/cm², 110 psi)
2nd clutch (C)	2	No or low 2nd pressure	2nd clutch		
3rd clutch (D)	D4	No or low 3rd pressure	3rd clutch		
4th clutch (E)		No or low 4th pressure	4th clutch		
	R		Servo valve or 4th clutch		

17. Install the inspection hole bolts with new sealing washers, and tighten the bolts to the specified torque.
    TORQUE: 18 N·m (1.8 kgf·m,13 lbf·ft)

    NOTE: Do not reuse old sealing washers.

Torque Converter Clutch Solenoid Valve - Shift Solenoid Valve A Test

1. Disconnect the torque converter clutch solenoid valve 3P connector/shift solenoid valve A.

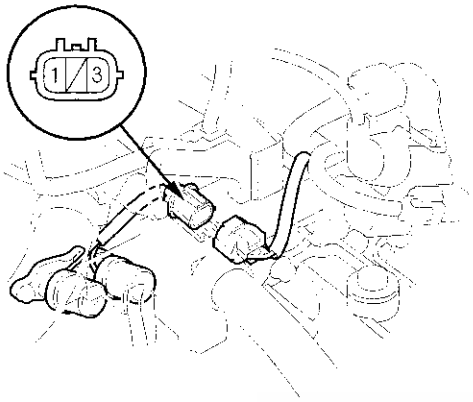

2. Measure the resistance of the torque converter clutch solenoid valve between the No. 3 terminal of the 3P connector and body ground.

   STANDARD: 12 – 25 Ω

3. Measure the resistance of the shift solenoid valve A between the No. 1 terminal of the 3P connector and body ground.

   STANDARD: 12 – 25 Ω

4. Replace the torque converter clutch solenoid valve/shift solenoid valve A if either resistance is out of specification.

5. If the resistance is within the standard, connect the No. 1 terminal of the 3P connector to the battery positive terminal. A clicking sound should be heard. Connect the No. 3 terminal to the battery positive terminal. A clicking sound should be heard. Replace the torque converter clutch solenoid valve/shift solenoid valve A if no sound is heard when connecting either terminal to the battery positive terminal.

Torque Converter Clutch Solenoid Valve - Shift Solenoid Valve A Replacement

NOTE: Torque converter clutch solenoid valve/shift solenoid valve A assembly must be removed/replaced as an assembly.

1. Remove the bolts securing the ignition coil bracket ('98-99 models), then remove the harness cover from the transmission hanger.

2. Remove the mounting bolts and torque converter clutch solenoid valve/shift solenoid valve A.

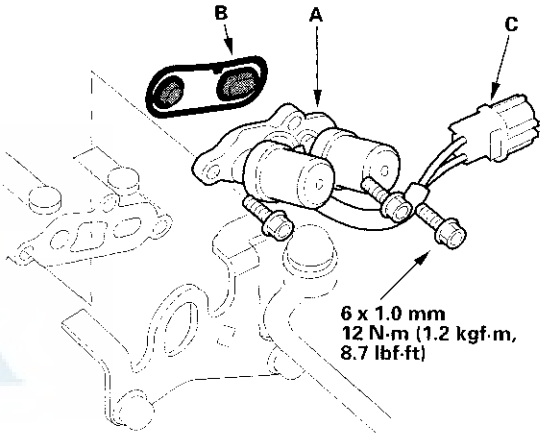

3. Clean the mounting surface and fluid passage of the torque converter clutch solenoid valve/shift solenoid valve A, and install a new torque converter clutch solenoid valve/shift solenoid valve A with a new filter/gasket (B).

4. Install the harness cover on the transmission hanger, and install the ignition coil bracket bolts ('98-99 models).

5. Install the male terminal connector (C) of the solenoid connector on the harness cover.

6. Check the connector for rust, dirt, or oil, then reconnect the connector securely.

Shift Solenoid Valves B and C Test

1. Remove the starter.

2. Disconnect the shift solenoid valve B or C connector.

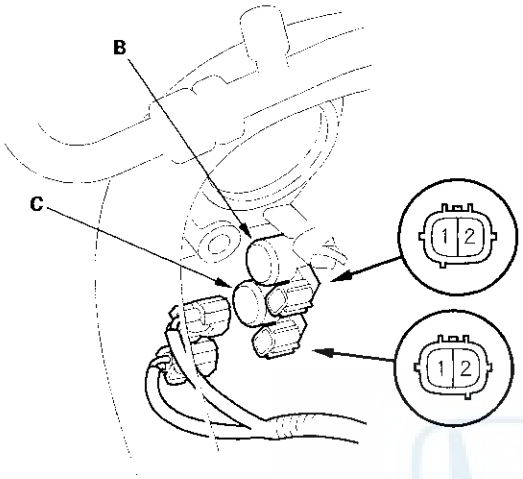

3. Measure the resistance between the No. 1 and No. 2 terminals of the shift solenoid valve B or C.

   STANDARD: 12 – 25 Ω

4. Replace the shift solenoid valve B or C if the resistance is out of standard.

5. If the resistance is within the standard, connect the No. 2 terminal of the shift solenoid valve B or C connector to the battery positive terminal, and connect the No. 1 terminal to the battery negative terminal. A clicking sound should be heard. Replace the shift solenoid valve B or C if no sound is heard.

Shift Solenoid Valves B and C Replacement

NOTE: If the shift solenoid valve B and C are replaced or removed at the same time, be sure to reinstall them correctly. The connector color of shift solenoid valve B is black, and the connector color of shift solenoid valve C is brown.

1. Remove the starter.

   NOTE: If you are only replacing shift solenoid valve C, starter removal is not needed.

2. Remove the mounting bolt and the shift solenoid valve B.

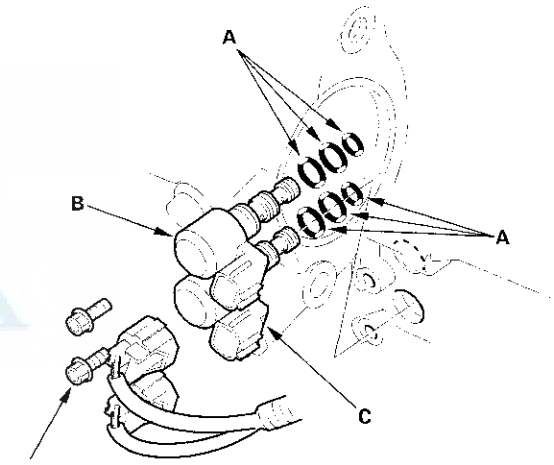

6 x 1.0 mm
12 N·m (1.2 kgf·m, 8.7 lbf·ft)

3. Remove the mounting bolt and the shift solenoid valve C.

4. Install a new shift control solenoid valve B or C with new O-rings (A). While installing the valves, do not allow dust or other foreign particles to enter the transmission.

5. Check the connector for rust, dirt or oil, then reconnect the connector securely.

6. Install the starter.

A/T Clutch Pressure Control Solenoid Valves A and B Test

1. Disconnect the A/T clutch pressure control solenoid valves A and B 2P connectors.

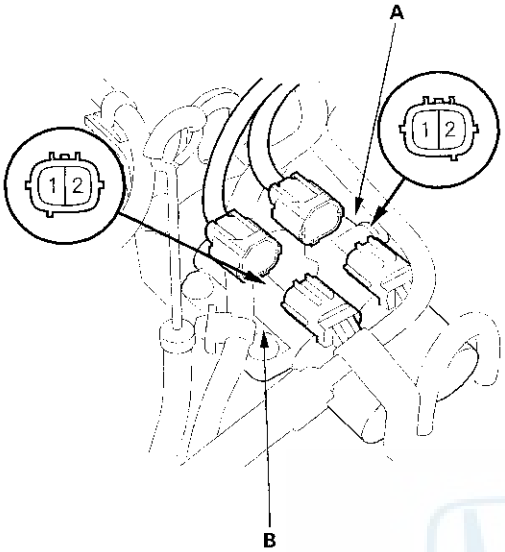

2. Measure the resistance of the A/T clutch pressure control solenoid valves A and B between the No. 1 and No. 2 terminals of each connector.

   STANDARD: Approx. 5.0 Ω

3. If the resistance of either A/T clutch pressure control solenoid is out of standard, replace the A/T clutch pressure control solenoid valves A and B.

4. Connect the No. 1 terminal of the A/T clutch pressure control solenoid valve A (and B) to the battery positive terminal, and connect the No. 2 terminal to the battery negative terminal. A clicking sound should be heard.

5. If not, remove the A/T clutch pressure control solenoid valves A and B.

6. Check the fluid passage of the A/T clutch pressure control solenoid valve for dust and dirt.

7. Connect the No. 1 terminal of the A/T clutch pressure control solenoid valves A and B to the battery positive terminal, and connect the No. 2 terminal to the battery negative terminal. Make sure the A/T clutch pressure control solenoid valve A and B move.

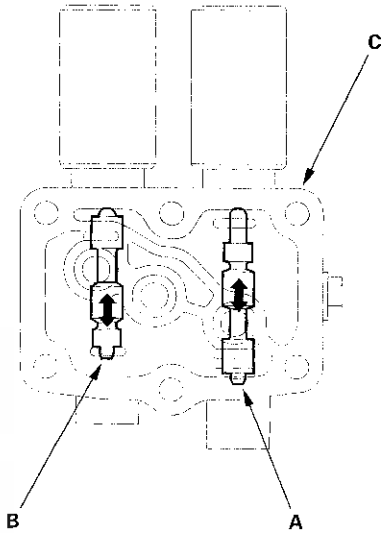

8. Disconnect one of the battery terminals and check valve movement.

   NOTE: You can see the valve movement through the fluid passage in the mounting surface of the A/T clutch pressure control solenoid valves A and B body (C).

9. If either valve binds, or moves sluggishly, or if the A/T clutch pressure control solenoid does not operate, replace the A/T clutch pressure control solenoid valves A and B.

A/T Clutch Pressure Control Solenoid Valves A and B Replacement

1. Remove the ATF cooler hose (outlet line) at the ATF cooler line. Turn the end of the cooler hose up to prevent ATF from flowing out, then plug the line and hose.

2. Remove the ATF cooler line (outlet line) from the transmission housing.

3. Remove the mounting bolts and the A/T clutch pressure control solenoid valves A and B (A).

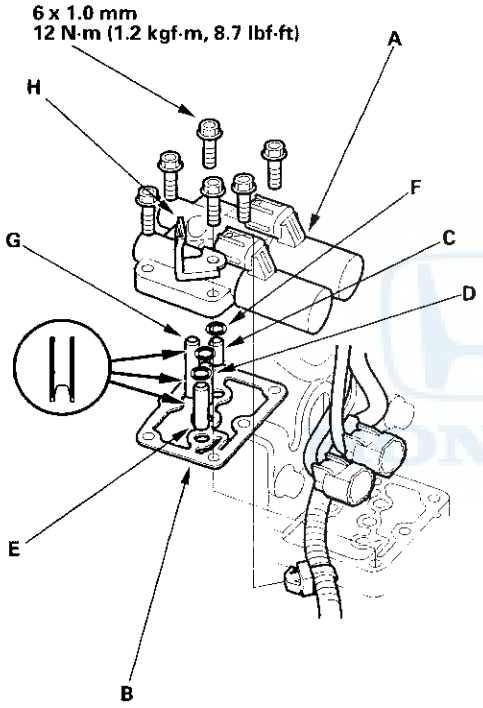

4. Clean the mounting surface and fluid passage of the A/T clutch pressure control solenoid valves A and B and the transmission housing.

5. Place the new gasket (B) on the transmission housing, then install the 8 x 18 mm ATF feed pipe (C), 8 x 26 mm pipe (D) and 8 x 36 mm pipe (E) with their filter side into the transmission housing.

6. Install the new O-rings (F) over the feed pipes, and install the 8 x 40 mm ATF feed pipe (G).

7. Install the new A/T clutch pressure control solenoid valves A and B and harness clamp bracket (H).

8. Check the A/T clutch pressure control solenoid valve connectors for rust, dirt, or oil, then connect them securely.

9. Install the ATF cooler line (outlet line), and connect the ATF cooler hose to the cooler line.

Speed Sensor Replacement

1. Disconnect the connectors from the mainshaft and countershaft speed sensors.

2. Remove the bolt securing the mainshaft speed sensor, then remove the mainshaft speed sensor from the end cover.

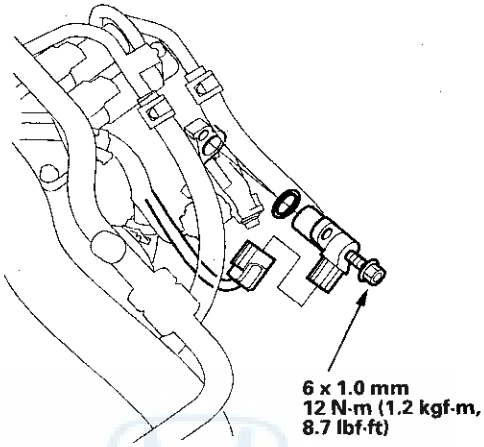

3. Remove the bolt securing the countershaft speed sensor, then remove the countershaft speed sensor from the transmission housing.

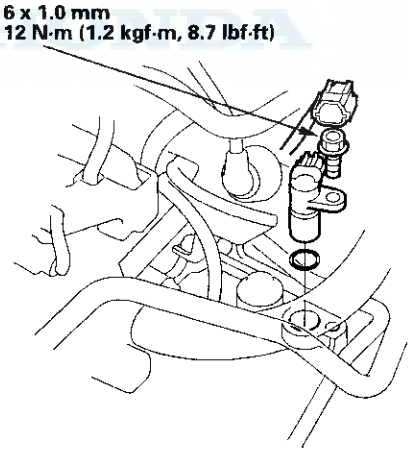

4. Replace the O-rings with new ones before installing the sensors.

5. Install the mainshaft and countershaft speed sensors, then connect the connectors.

2nd Clutch Pressure Switch Replacement

1. Disconnect the 2nd clutch pressure switch connector.

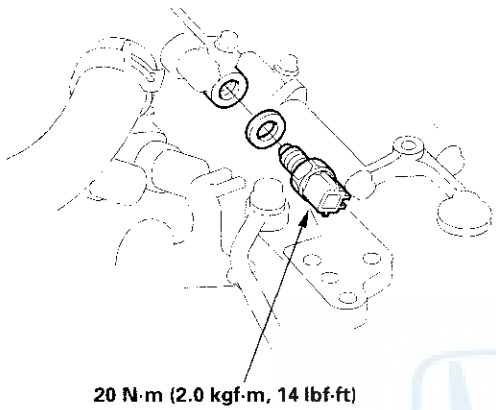

2. Replace the 2nd clutch pressure switch, then install a new one with a new sealing washer. Tighten the switch on the metal part, not the plastic part.

3. Reconnect the connector, making sure there is no water, oil, dust, or other foreign particles inside it.

3rd Clutch Pressure Switch Replacement

1. Disconnect the 3rd clutch pressure switch connector.

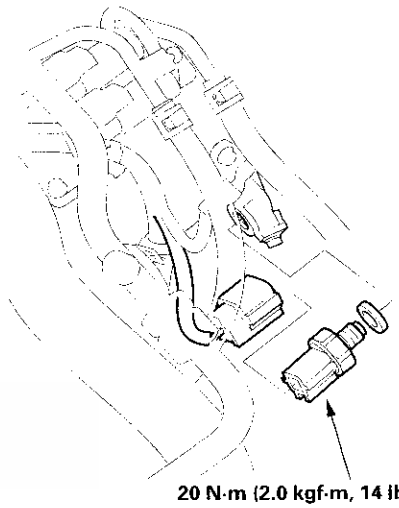

2. Replace the 3rd clutch pressure switch, then install a new one with a new sealing washer. Tighten the switch on the metal part, not the plastic part.

3. Reconnect the connector, making sure there is no water, oil, dust, or other foreign particles inside it.

ATF Level Check

NOTE: Keep all foreign particles out of the transmission.

1. Warm up the engine to normal operating temperature (the radiator fan comes on).

2. Park the vehicle on the level ground. Turn off the engine.

3. Remove the dipstick (yellow loop) (A) from the transmission, and wipe it with a clean cloth.

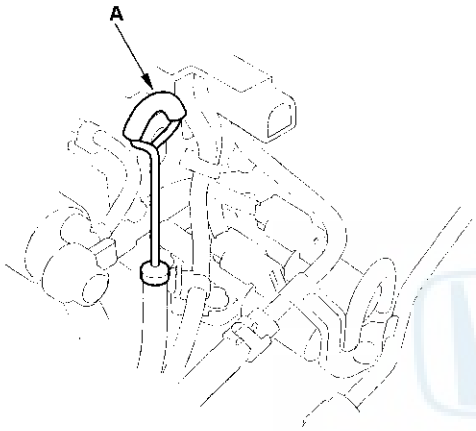

4. Insert the dipstick into the transmission.

5. Remove the dipstick and check the fluid level. It should be between the upper mark (B) and lower mark (C).

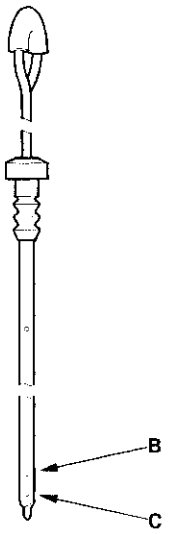

6. If the level is below the lower mark, pour the recommended fluid into the filler hole (A) to bring it to the upper mark. Always use Honda ATF-Z1 Automatic Transmission Fluid (ATF). Using a non-Honda ATF can affect shift quality.

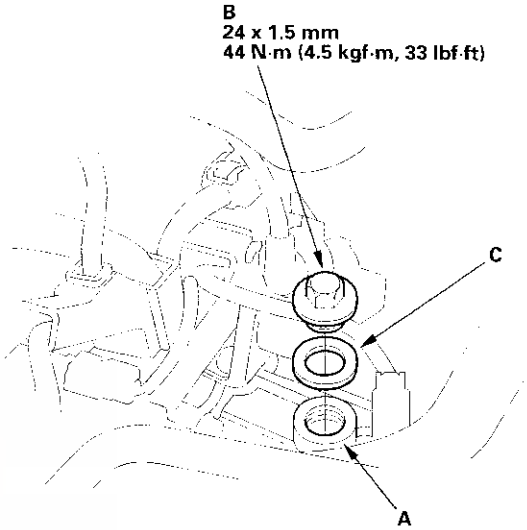

7. Install the ATF filler bolt (B) with a new sealing washer (C).

8. Insert the dipstick back into the transmission.

ATF Replacement

NOTE: Keep all foreign particles out of the transmission.

1. Bring the transmission up to operating temperature (the radiator fan comes on) by driving the vehicle.

2. Park the vehicle on the level ground, and turn the engine off.

3. Remove the ATF filler bolt and drain plug, and drain the automatic transmission fluid (ATF).

   NOTE: If a cooler flusher is to be used, refer to ATF Cooler Flushing (see page 14-127).

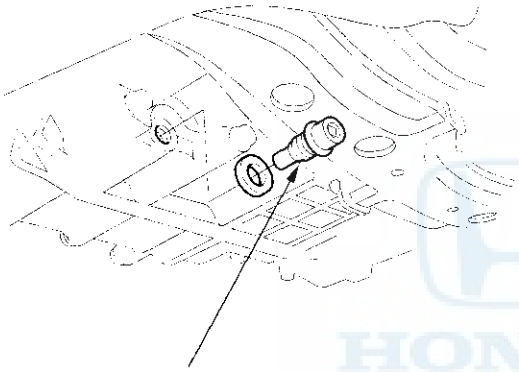

18 x 1.5 mm
49 N·m (5.0 kgf·m, 36 lbf·ft)

4. Reinstall the drain plug with a new sealing washer.

5. Refill the transmission with the recommended fluid into the filler hole (A) to the upper mark on the dipstick. Always use Honda ATF-Z1 Automatic Transmission Fluid (ATF). Using a non-Honda ATF can affect shift quality.

   Automatic Transmission Fluid Capacity:
   2.9 ℓ (3.1 US qt, 2.6 Imp qt) at changing
   7.2 ℓ (7.6 US qt, 6.3 Imp qt) at overhaul

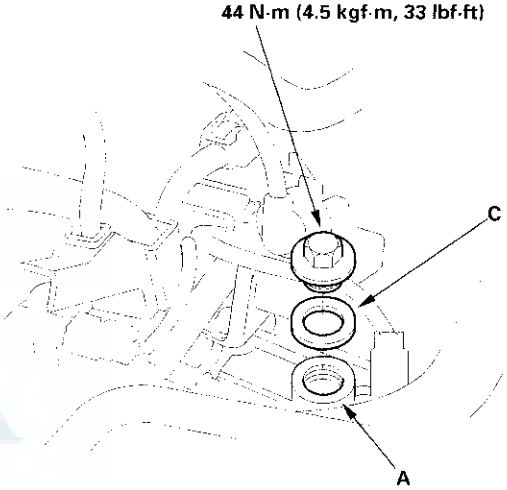

6. Install the ATF filler bolt (B) with a new sealing washer (C).

Transmission Removal

1. Before disconnecting power, make sure you have the anti-theft code for the radio, then write down the frequencies for the radio's preset stations.

2. Disconnect the battery negative terminal, then remove the positive terminal.

3. Remove the battery hold-down bracket, then remove the battery and battery tray.

4. Remove the battery cable clamps from the battery base.

5. Loosen the mounting bolts securing the battery base bracket, then remove the battery base bracket and battery base.

6. Remove the intake air duct and air cleaner housing assembly.

7. Raise the vehicle, and make sure it is securely supported. Remove the drain plug, and drain the automatic transmission fluid (ATF). Reinstall the drain plug with a new sealing washer.

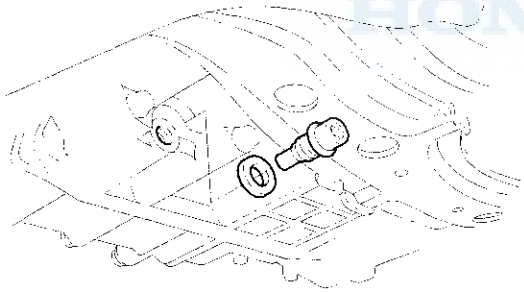

8. Remove the ATF cooler hose (A) from the clamp (B) on the starter.

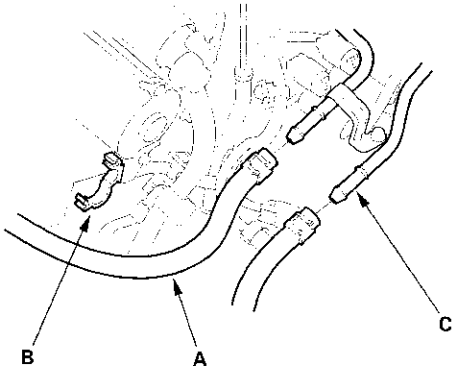

9. Remove the ATF cooler hoses (A) from the ATF cooler lines (C). Turn the ends of the ATF cooler hoses up to prevent ATF from flowing out, then plug the ATF cooler hoses and lines.

   NOTE: Check for any signs of leakage at the hose joints.

10. Remove the starter cables (A) from the starter (B) and clamp bracket (C), then remove the starter.

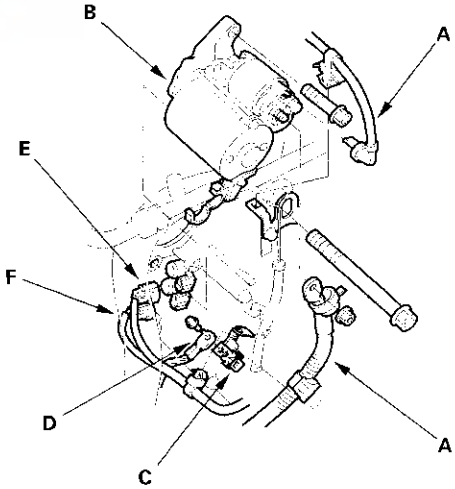

11. Remove the transmission ground terminal (D).

12. Disconnect the shift solenoid valve B connector (E), and C connector (F), then remove the harness clamp from the clamp bracket.

13. Disconnect the connectors from the 3rd clutch pressure switch (A), mainshaft speed sensor (B), and A/T clutch pressure control solenoid valves A and B (C), then remove the harness clamps from the clamp brackets.

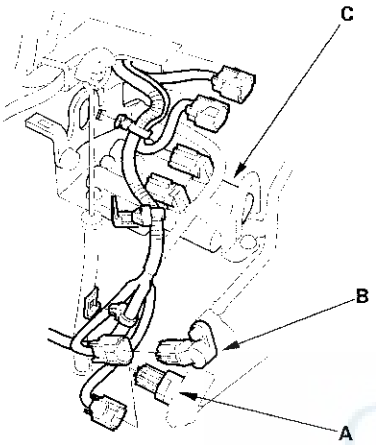

14. Disconnect the connector from the torque converter clutch solenoid valve/shift solenoid valve A assembly (A), then remove the connector from harness cover (B).

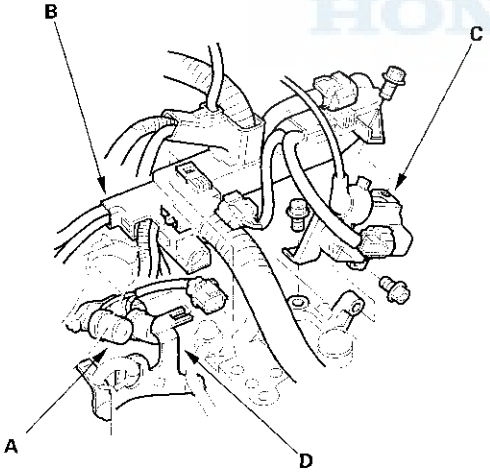

15. Remove the two bolts securing the harness cover and the ignition coil bracket, and remove the ignition coil (C). ('98-99 models)

16. Push the harness cover rearward to remove from the transmission hanger (D).

17. Disconnect the connectors from the countershaft speed sensor (A), and 2nd clutch pressure switch (B).

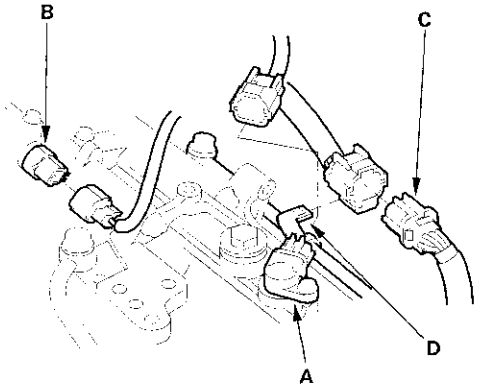

18. Remove the transmission range switch connector (C) from the connector bracket (D), then disconnect it.

19. Remove the nut from the front mount.

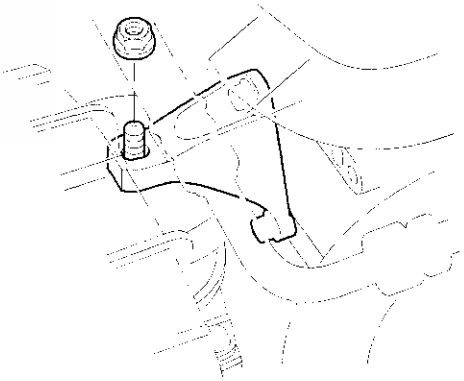

(cont'd)

Transmission Removal (cont'd)

20. Lift and support the engine/transmission assembly with an engine hanger (P/N AAR-T-1256, available through the American Honda Tool and Equipment program, or equivalent).

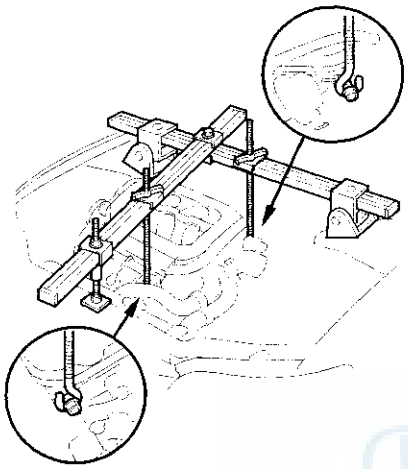

21. Remove the splash shield.

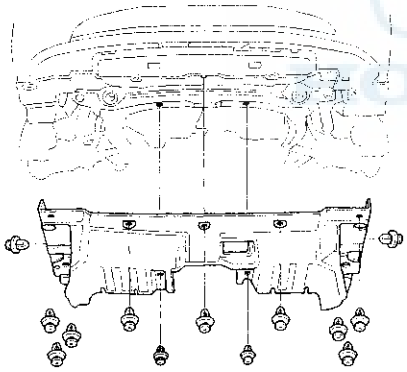

22. Remove the cotter pins (A) and castle nuts (hex nuts) (B), and remove the damper forks (C), then separate the ball joints from the lower arms (D), refer to the '98-01 Accord Service Manual (see page 18-17).

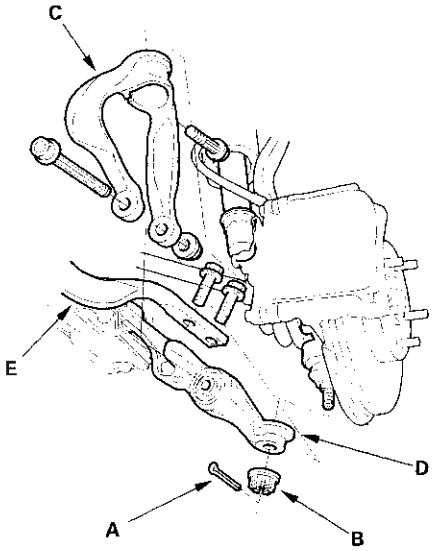

23. Remove the bolts securing the radius rods (E), then separate the radius rods from the lower arms (D).

24. Pry the driveshafts out of the differential and the intermediate shaft, refer to the '98-01 Accord Service Manual (see step 10 on page 16-4).

25. Make reference marks (A) across both the front beam (B) and the rear beam (C).

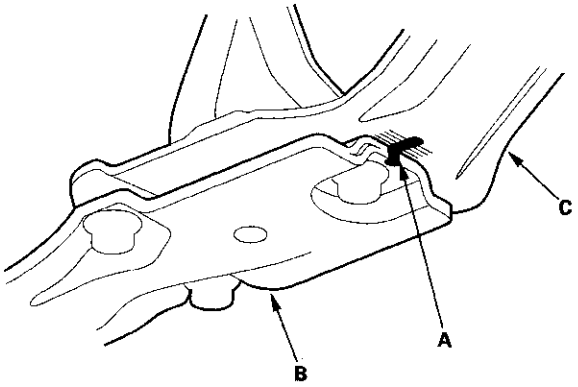

26. Disconnect the vacuum tube (A) on the front beam (B), and unclamp the power steering fluid pipe (C) from the clamps on the front beam.

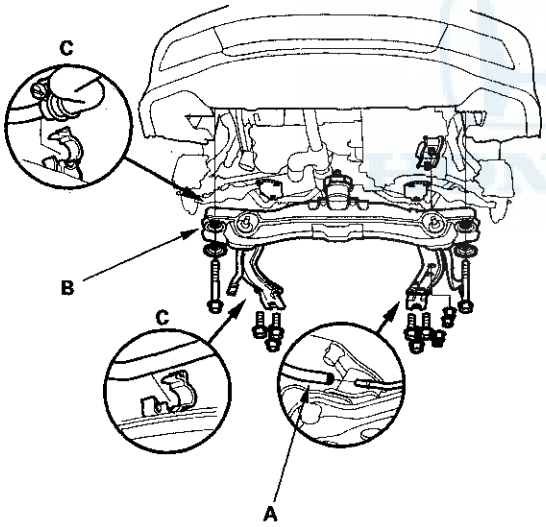

27. Remove the nuts securing the transmission lower mounts, then remove the front beam (B).

28. Remove the transmission lower rear mount (A) from the transmission.

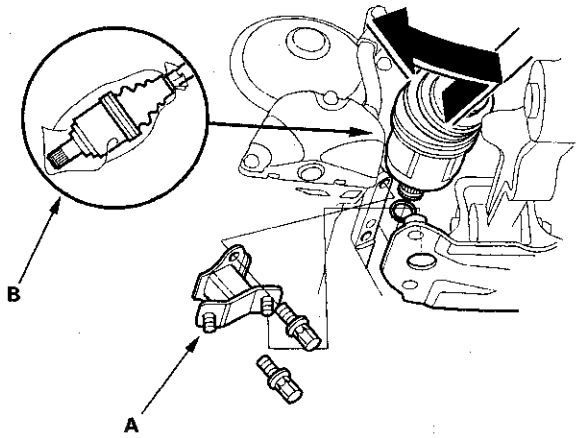

29. Pull on the inboard joints to remove the left driveshaft from the differential and to remove the right driveshaft from the intermediate shaft.

30. Move the left driveshaft to the front side. Coat all precision finished surfaces with clean engine oil, then tie the plastic bags (B) over the driveshaft ends.

31. Remove the intermediate shaft.

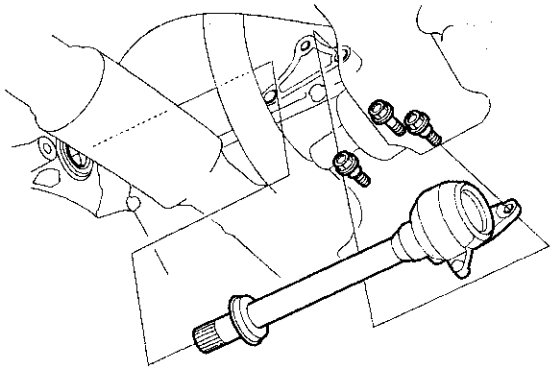

32. Coat all precision finished surfaces with clean engine oil, then tie the plastic bags over the both ends of intermediate shaft.

(cont'd)

Transmission Removal (cont'd)

33. Remove the bolts securing shift cable holder (A), then remove shift cable cover (B).

    NOTE: To prevent damage to the control lever joint, remove the bolts securing the holder before removing the bolts securing the cover.

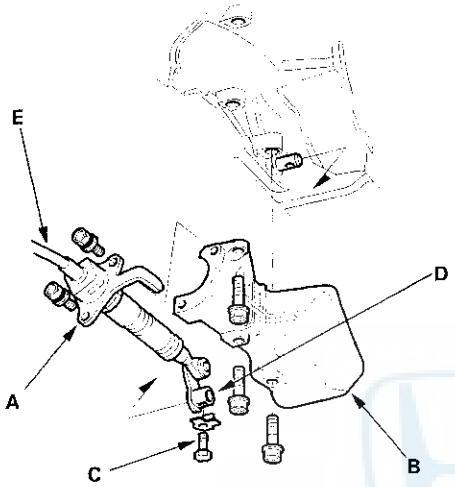

34. Remove the lock bolt (C) securing the control lever (D), then remove the shift cable (E) with the control lever. Do not bend the shift cable excessively.

35. Install a 6 x 1.0 x 14 mm bolt (A) and nut (B) on the shift cable cover (C), then reinstall the shift cable cover to the torque converter housing.
    (The torque converter may stay on the engine, and the bolt head will support the torque converter, when the transmission is removed.)

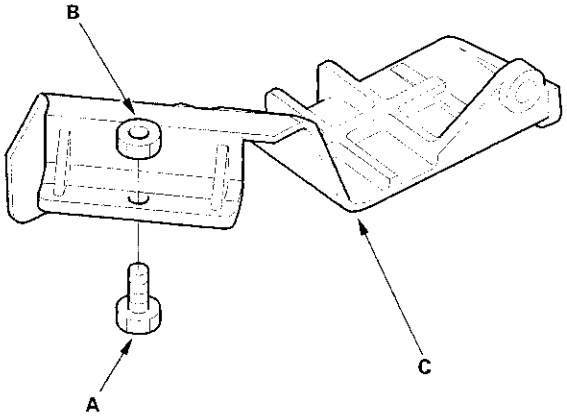

36. Remove the torque converter cover (A), then remove the eight drive plate bolts (B) one at a time while rotating the crankshaft pulley.

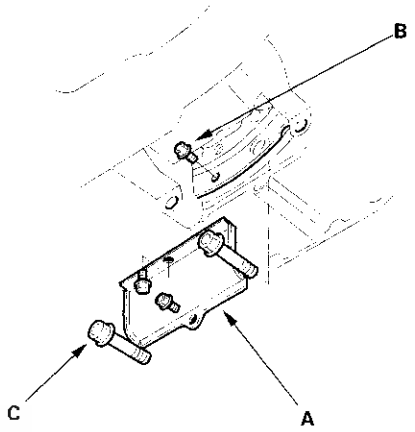

37. Remove the engine stiffener bolts (C).

38. Remove the front mount bracket.

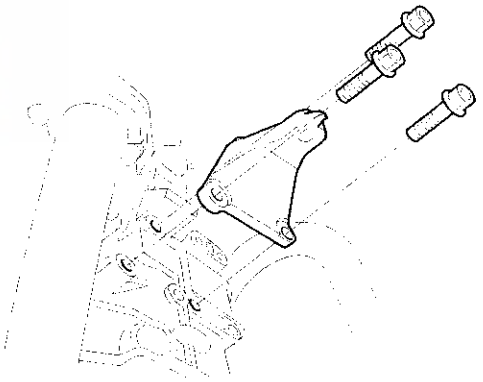

39. Place a transmission jack under the transmission.

40. Remove the transmission housing mounting bolts.

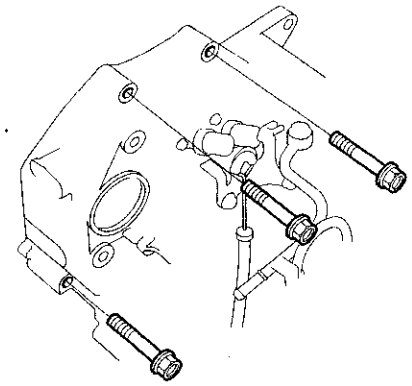

41. Remove the transmission housing mounting bolts (A) and connector bracket bolt (B).

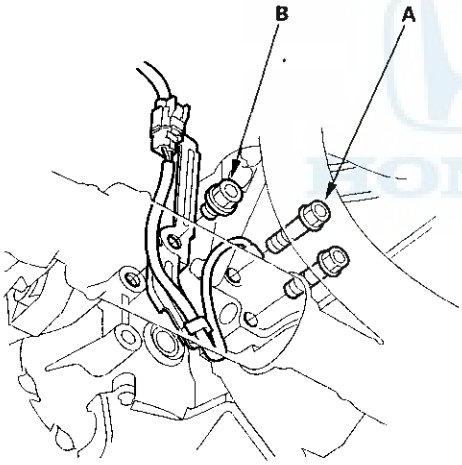

42. Pull the transmission away from the engine until it clears the dowel pins, then lower it on the transmission jack.

NOTE: If the torque converter is stuck to the drive plate, reach through the starter opening, and pull it toward the transmission housing.

43. Remove the shift cable cover, then remove the torque converter assembly from the torque converter housing.

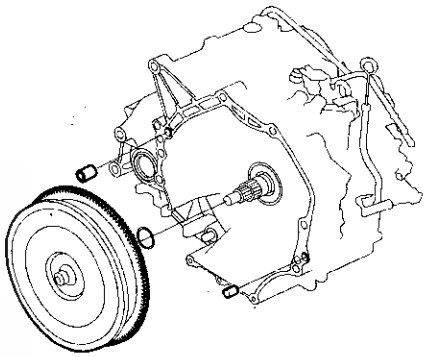

44. Remove the transmission lower front mount.

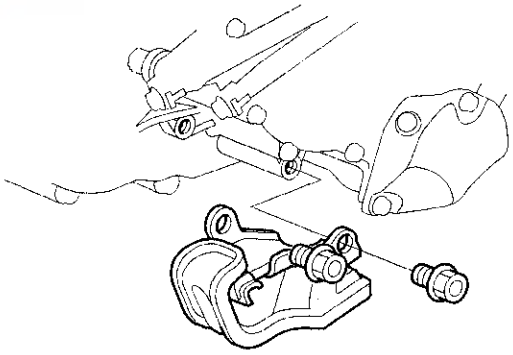

(cont'd)

Transmission Removal (cont'd)

45. Inspect the drive plate, and replace it if it's damaged.

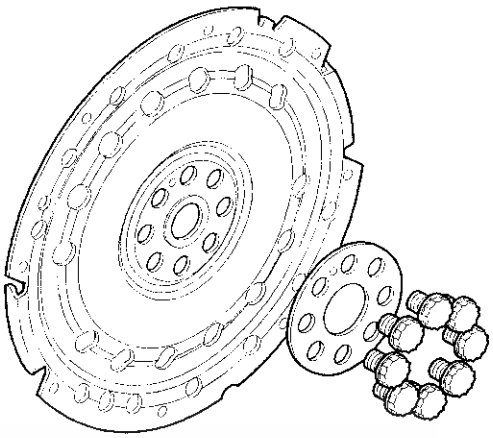

46. Remove the 6 x 1.0 x 14 mm bolt (A) and nut (B) from the shift cable cover (C).

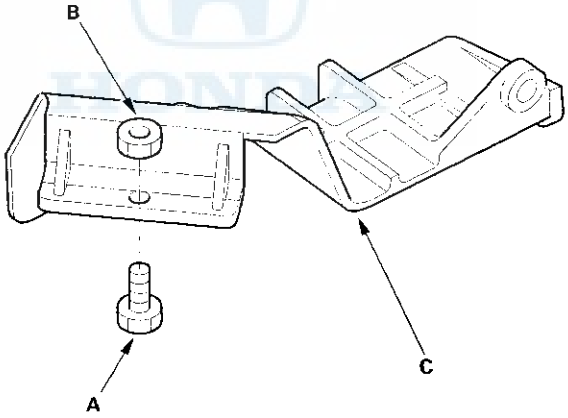

Transmission Installation

1. Flush the ATF cooler (see page 14-127).

2. Install the transmission lower front mount.

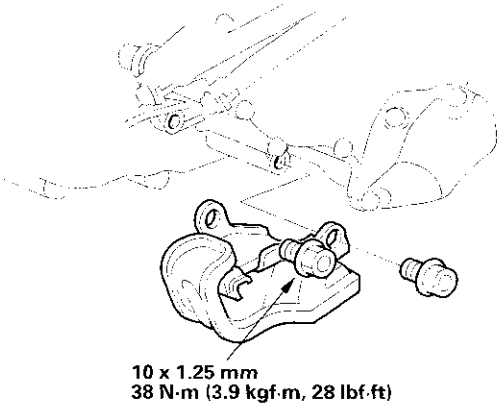

3. Install the torque converter assembly (A) on the mainshaft (B) with a new O-ring (C).

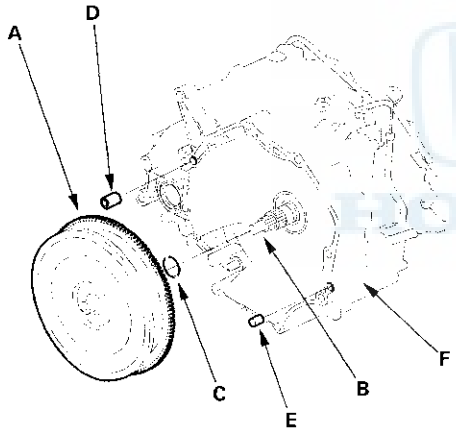

4. Install the 14 mm dowel pin (D) and 10 mm dowel pin (E) in the torque converter housing (F).

5. Place the transmission on a transmission jack, and raise it to engine level.

6. Attach the transmission to the engine, then install the transmission housing mounting bolts (A) and connector bracket bolt (B).

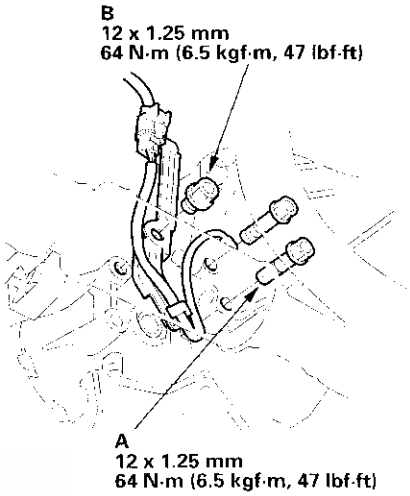

7. Install the transmission housing mounting bolts.

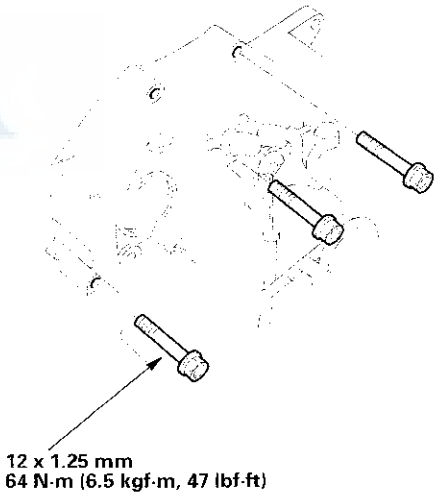

(cont'd)

Transmission Installation (cont'd)

8. Install the front mount bracket.

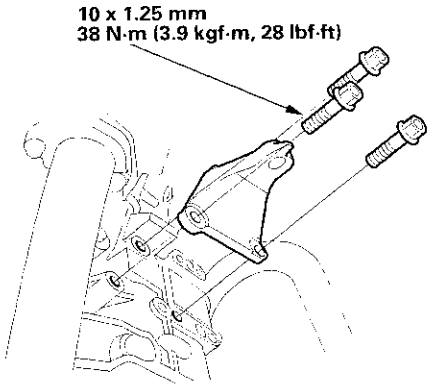

9. Install the engine stiffener mounting bolts (A).

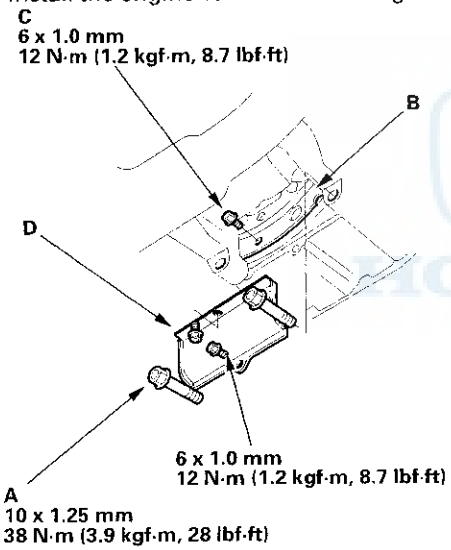

10. Attach the torque converter to the drive plate (B) with eight bolts (C). Rotate the crankshaft pulley as necessary to tighten the bolts to 1/2 of the specified torque, then to the final torque, in a crisscross pattern. After tightening the last bolt, check that the crankshaft rotates freely.

11. Install the torque converter cover (D).

12. Tighten the crankshaft pulley bolt as necessary (see page 6-17).

13. Install the control lever (A) with the shift cable (B) on the control shaft (C). Do not bend the shift cable excessively.

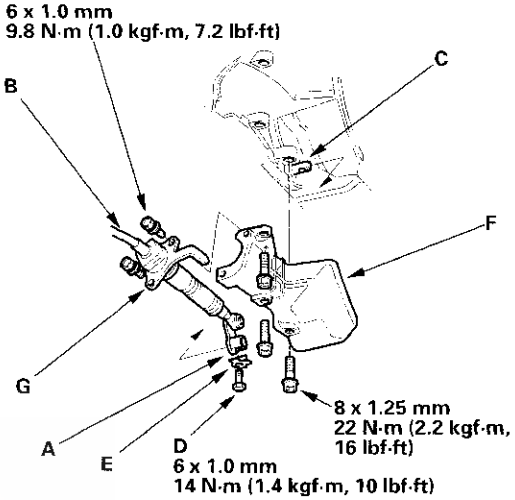

14. Install the lock bolt (D) with a new lock washer (E), then bend the lock washer tab against the bolt.

15. Install the shift cable cover (F), then install the shift cable holder (G) on the shift cable cover.

    NOTE: To prevent damage to the control lever joint, be sure to install the shift cable holder after installing the shift cable cover to the torque converter housing.

16. Clean the areas where the intermediate shaft contacts the transmission (differential) with solvent or carburetor cleaner, and dry with compressed air. Then install the intermediate shaft in the differential. While installing the intermediate shaft, be sure not to allow dust or other foreign particles to enter the transmission.

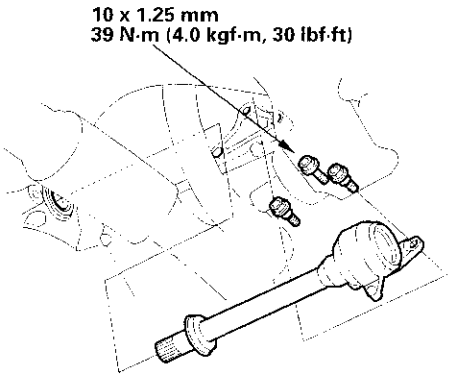

17. Install new set rings on the right and left driveshafts.

18. Install the right and left driveshaft, refer to the '98-01 Accord Service Manual (see page 16-20). While installing the left driveshaft in the differential, be sure not to allow dust or other foreign particles to enter the transmission.

    NOTE:
    - Clean the areas where the left driveshaft contacts the transmission (differential) with solvent or carburetor cleaner, and dry with compressed air.
    - Turn the right and left steering knuckle fully outward, and slide the left driveshaft into the differential until you feel its spring clip engage the side gear. Slide the right driveshaft into the intermediate shaft until you feel its spring clip engage the intermediate shaft.

19. Install the transmission lower rear mount on the transmission.

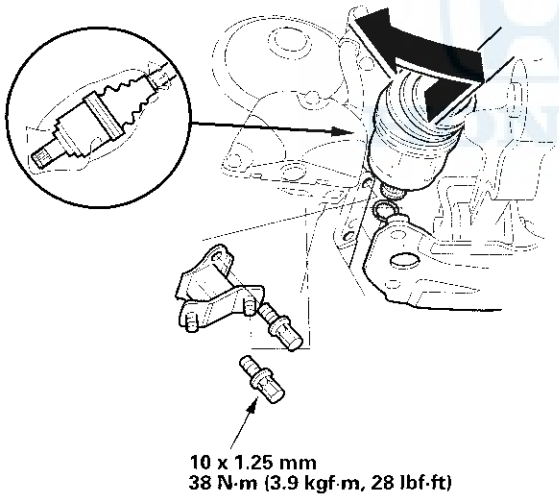

20. Install the front beam (A) by aligning both reference marks (B) on both rear beam (C), and tighten the bolts.

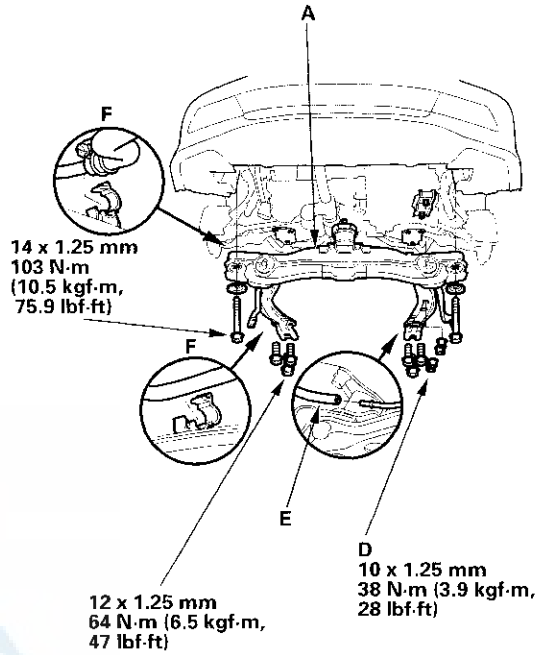

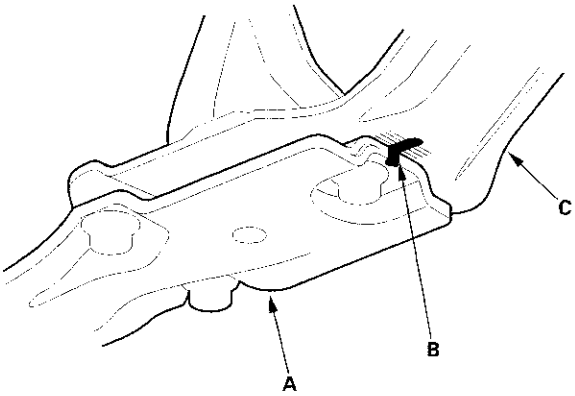

21. Install the transmission lower mount nuts (D).

22. Connect the vacuum tube (E), and install the power steering fluid pipe (F) on its clamps.

(cont'd)

Transmission Installation (cont'd)

23. Install the damper forks (A), then install the ball joints on each lower arms (B) with the castle nuts (hex nuts) (C) and new cotter pins (D).

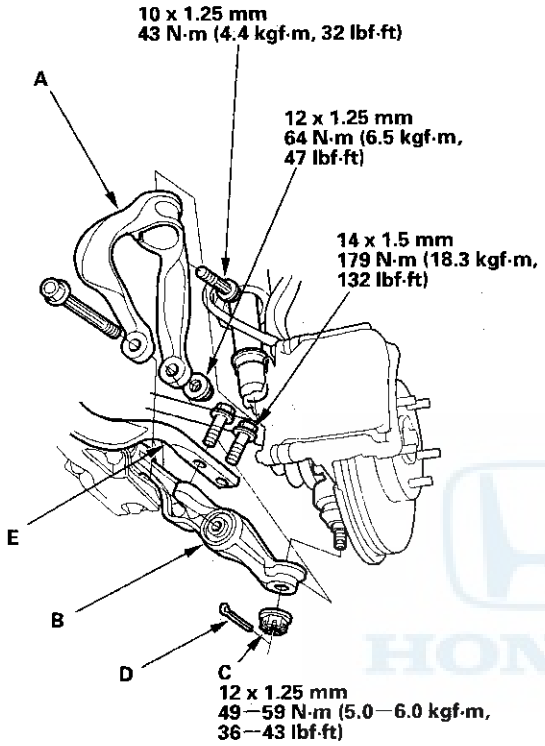

24. Install the radius rods (E) on each lower arm.

25. Remove the jack from the transmission.

26. Install the splash shield.

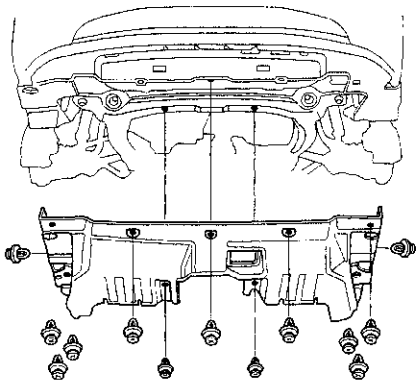

27. Install and tighten the nut on the front mount.

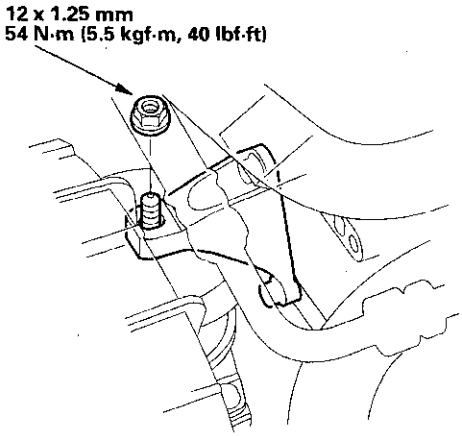

28. Remove the hoist, then remove the hoist bracket from the engine.

29. Connect the transmission range switch connector (A), then install it on its connector bracket (B).

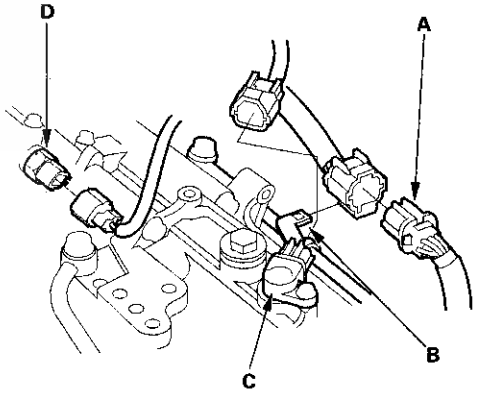

30. Connect the connectors to the countershaft speed sensor (C) and 2nd clutch pressure switch (D). Do not allow water, fluid, oil, dust, or other foreign particles to enter the 2nd clutch pressure switch connector.

31. Install the harness cover (A) on the transmission hanger (B), then install the ignition coil (C). ('98-99 models)

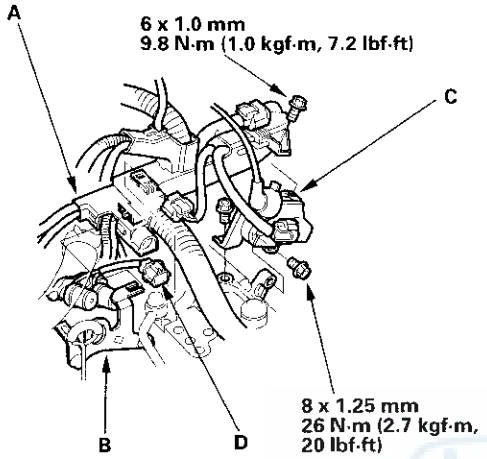

32. Install the torque converter clutch solenoid valve/ shift solenoid valve A assembly connector (D) on the harness cover, then connect the connector.

33. Connect the connectors to the 3rd clutch pressure switch (A), mainshaft speed sensor (B), and A/T clutch pressure control solenoid valves A and B (C), then install the clamps on the clamp brackets. Do not allow water, fluid, oil, dust, or other foreign particles to enter the 3rd clutch pressure switch connector.

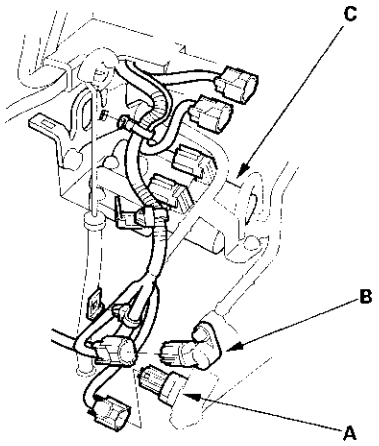

34. Connect the connectors to the shift solenoid valve B (A) and shift solenoid valve C (B), then install the clamp on the clamp bracket.

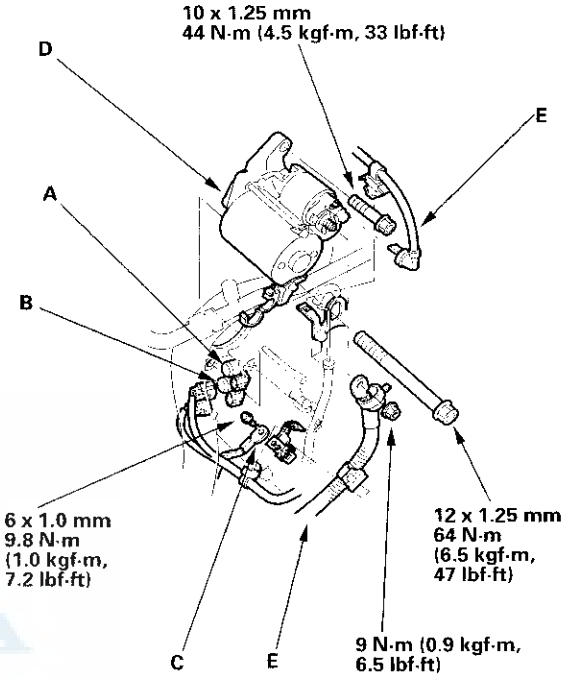

35. Install the transmission ground terminal (C).

36. Install the starter (D) on the torque converter housing. Connect the starter cables (E) to the starter, and install the harness clamp on the clamp bracket. Make sure the crimped side of the starter cable ring terminal is facing out.

37. Connect the ATF cooler hoses (A) to the ATF cooler lines (B) (see page 14-128). Clamp the ATF cooler hose with the clamp (C) on the starter.

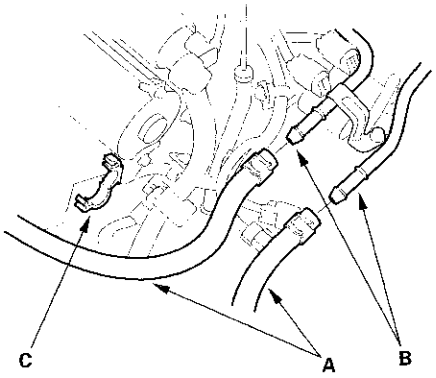

(cont'd)

Transmission Installation (cont'd)

38. Install the battery base bracket and battery base.

39. Install the battery cable clamps on the battery base.

40. Install the battery tray and battery, then secure the battery with its hold-down bracket.

41. Install the intake air duct and air cleaner housing assembly.

42. Refill the transmission with ATF (see page 14-113).

43. Connect the battery positive terminal, then connect the negative terminal.

44. Set the parking brake. Start the engine, and shift the transmission through all gears three times.

45. Check the shift lever operation, A/T gear position indicator operation, and shift cable adjustment.

46. Check and adjust the front wheel alignment, refer to the '98-01 Accord Service Manual (see page 18-5).

47. Start the engine and let it reach normal operating temperature (the radiator fan comes on) with the transmission in P or N position, then turn it off and check the ATF level (see page 14-112).

48. Perform a road test (see page 14-101).

49. Enter the anti-theft code for the radio, then enter the customer's radio station presets.

50. Loosen the front mount nut after the road test, then retighten the nut to the specified torque.

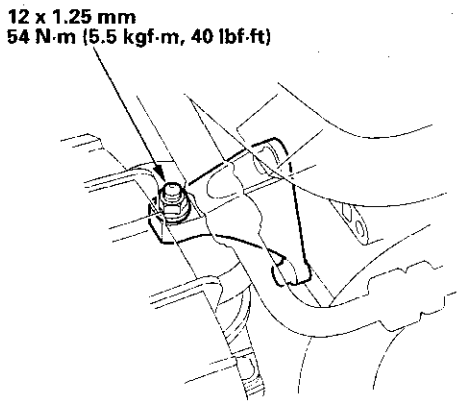

ATF Cooler Flushing

Special Tools Required
Commercially available transmission cooler flusher
Kent-Moore J38405-A or equivalent

This procedure should be performed before reinstalling the transmission.

1. Check the equipment for wear and cracks before using it. Replace any worn or cracked components.

2. Using the measuring cup, fill the flusher (A) with 21 ounces (approximately 2/3 full) of biodegradable flushing fluid (J35944-20). Do not substitute with any other fluid. Follow the handling procedure on the fluid container.

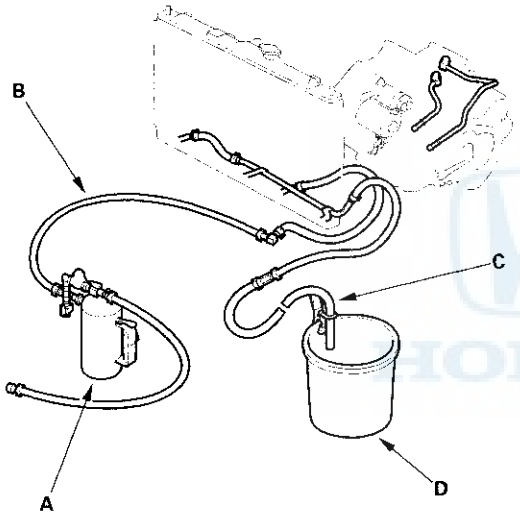

3. Secure the flusher filler cap, and pressurize the flusher with compressed air to 550 – 829 kpa (5.6 – 8.45 kgf/cm², 80 – 120 psi). The air line should be equipped with a water trap to ensure a dry air system.

4. Hang the flusher under the vehicle.

5. Attach the flusher discharge hose (B) to the return line of the ATF cooler using a clamp.

6. Connect the drain hose (C) to the inlet line on the ATF cooler using a clamp. Securely clamp the opposite end of the drain hose to a bucket (D) or floor drain.

7. With the water and air valves (A) off, attach the water and air supplies to the flusher. (Hot water if available.)

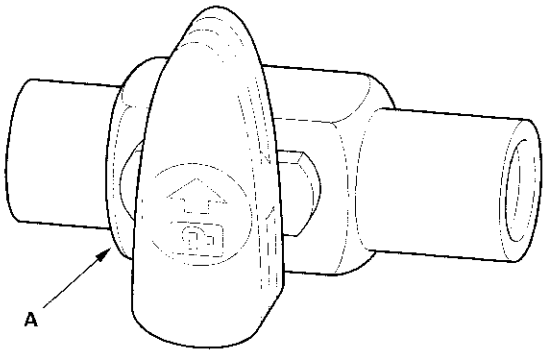

8. Turn on the water valve for 10 seconds. If water does not flow through the cooler, it is completely plugged, cannot be flushed, and must be replaced.

9. Depress the trigger to mix the flushing fluid into the water flow. Use the wire clip to hold the trigger down.

10. While flushing with the water and flushing fluid for two minutes, turn the air valve on for five seconds every 15 – 20 seconds to create a surging action.

    AIR PRESSURE: MAX 845 kPa (8.45 kgf/cm², 120 psi)

11. Turn the water valve off. Release the trigger, then reverse the hoses to the cooler so you can flush in the opposite direction. Repeat steps 8 through 10.

12. Release the trigger, and rinse the cooler with water for one minute.

13. Turn the water valve and the water supply off.

14. Turn the air valve on for two minutes, or until no moisture is visible leaving the drain hose. Residual moisture in the cooler or lines can damage the transmission.

15. Remove the flusher from the cooler line. Attach the drain hose to an ATF container.

16. Install the transmission, and leave the drain hose attached to the cooler line.

(cont'd)

ATF Cooler Flushing (cont'd)

17. Make sure the transmission is in P position. Fill the transmission with ATF, and run the engine for 30 seconds or until approximately 0.95 ℓ (1.0 US qt., 0.8 Imp qt.) is discharged.

18. Remove the drain hose, and reconnect the cooler return hose to the transmission.

19. Refill the transmission with ATF to the proper level (see page 14-113).

ATF Cooler Hoses Replacement

1. Connect the cooler hoses (A) to the lines (B) and the ATF cooler, and secure them with the clips (C).

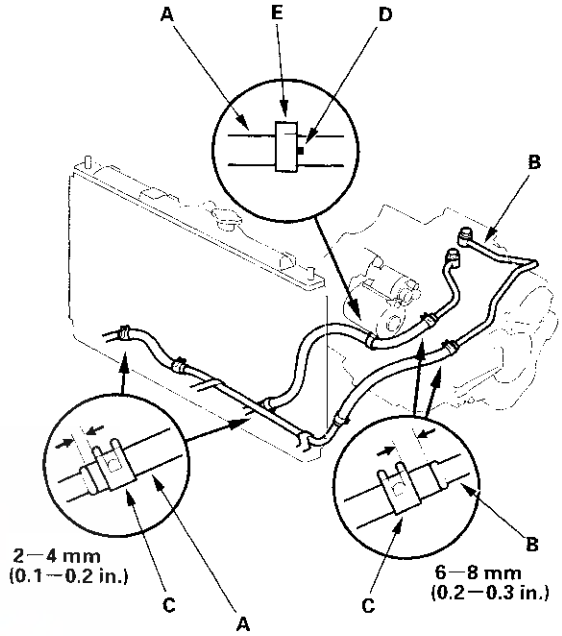

2. Clamp the ATF cooler hose with the yellow mark (D) on the clamp (E).

Shift Lever Removal

1. Shift the transmission into R position.

2. Remove the center console, refer to '98-01 Accord Service Manual (see page 20-83).

3. Remove the nut securing the shift cable end (A), then separate the shift cable end from the shift lever assembly.

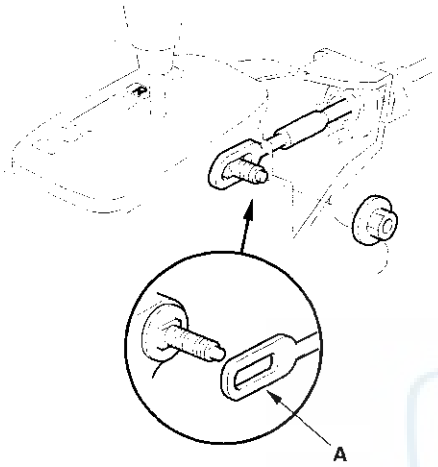

4. Rotate the socket holder (A) on the shift cable (B) counterclockwise a quarter turn, then slide the holder to remove the shift cable from the shift lever bracket base (C).

   NOTE: Do not remove the shift cable by twisting the shift cable guide pipe (D).

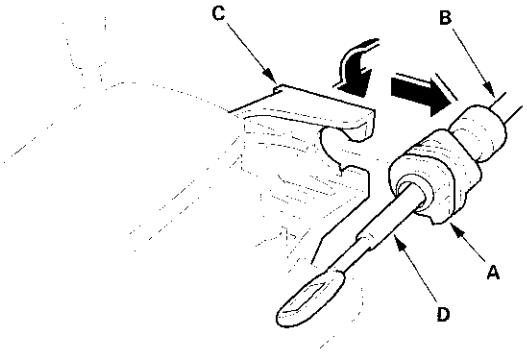

5. Disconnect the shift lock solenoid connector (A) and park pin switch 4P connector (B).

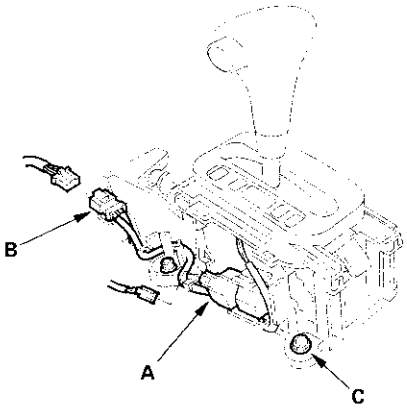

6. Remove the four bolts (C) securing the shift lever bracket base, then remove the shift lever assembly.

Shift Lever Installation

1. Install the shift lever assembly.

2. Turn the ignition switch ON (II), and verify that the R position indicator light comes on.

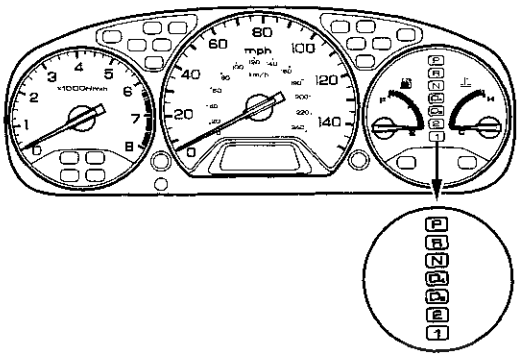

3. If necessary, push the shift cable until it stops, then release your hand. Pull the shift cable back one step so that the shift position is in R.

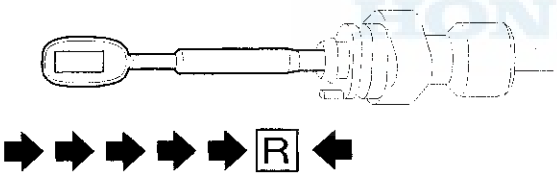

4. Turn the ignition switch OFF.

5. Insert a 6.0 mm (0.24 in.) pin (A) into the positioning hole (B) on the shift lever bracket base through the positioning hole on the shift lever assembly.

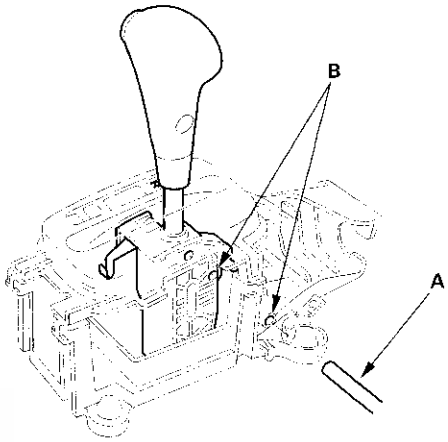

6. Rotate the socket holder (A) on the shift cable (B) counterclockwise a quarter turn, then slide the holder onto the shift lever bracket base (C). Install the shift cable end (D) over the mounting stud (E) by aligning its square hole (F) with the square shape (G) at the bottom of the stud. Rotate the holder clockwise a quarter turn to secure the shift cable.

   NOTE: Do not install the shift cable by twisting the shift cable guide (H).

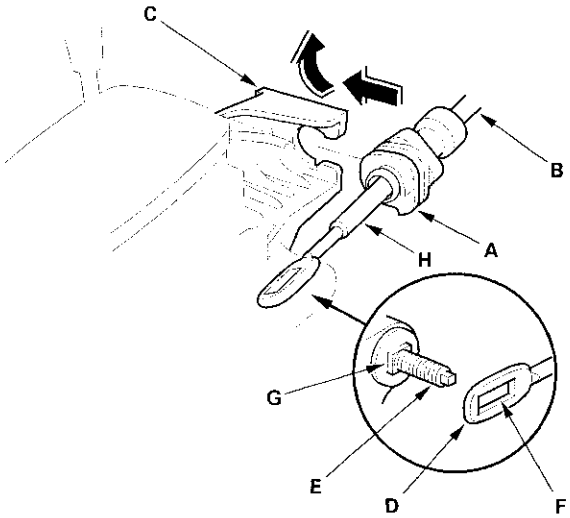

7. Verify that the shift cable end (A) is properly installed on the mounting stud (B).

Properly Installed:

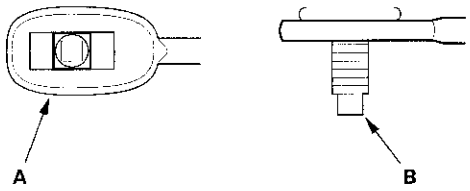

Not Properly Installed:

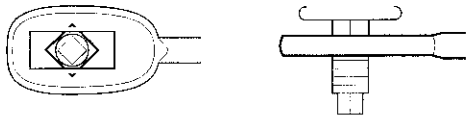

Cable end rides on the bottom of the mounting stud.

8. If not properly installed, remove the shift cable from the shift lever bracket base, and reinstall the shift cable. Do not install the shift cable end on the mounting stud while the shift cable is on the shift cable bracket base.

9. Install and tighten the nut.

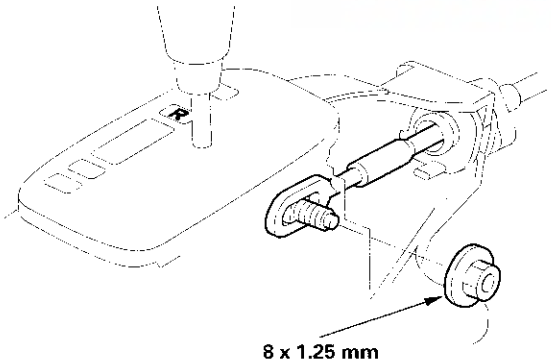

8 x 1.25 mm
22 N·m (2.2 kgf·m, 16 lbf·ft)

10. Remove the 6.0 mm (0.24 in.) pin that was installed to hold the shift lever.

11. Connect the shift lock solenoid connector and park pin switch 4P connector.

12. Move the shift lever to each gear, and verify that the A/T gear position indicator follows the transmission range switch.

13. Push the shift lock release, and verify that the shift lever releases.

Shift Lever Disassembly/Reassembly

SRS components are located in this area. Review the SRS component locations, precautions, and procedures in the SRS section before performing repairs or service, refer to '98-01 Accord Service Manual (see page 23-28).

Apply silicone grease to these parts:

- Movable parts of the shift lever.
- Movable parts of the shift lock mechanism.
- Sliding surfaces on the detent spring.

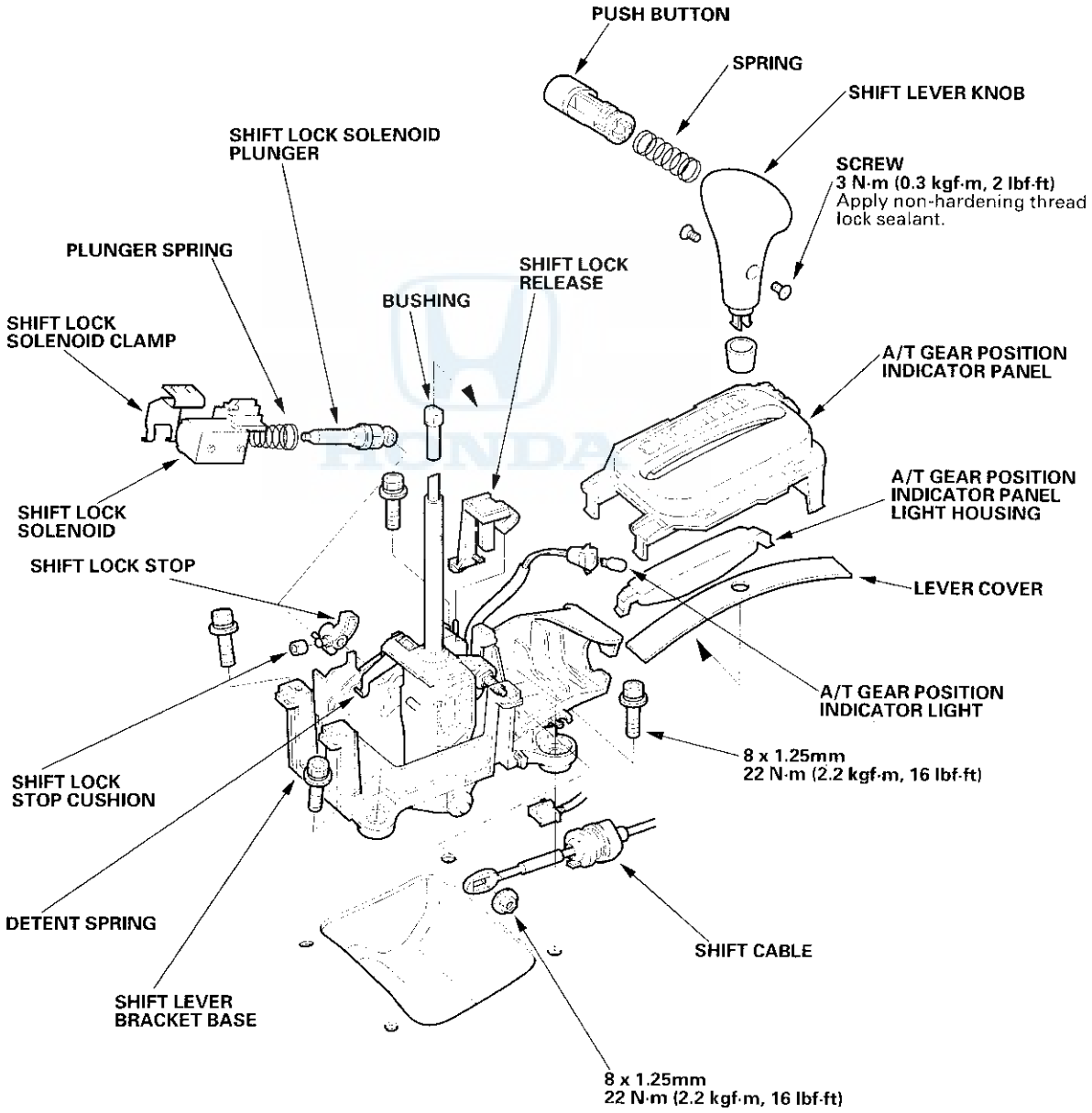

Shift Cable Replacement

1. Raise the front of the vehicle, and make sure it is securely supported, refer to the '98-01 Accord Service Manual (see page 1-15).

2. Set the parking brake, and block rear wheels securely.

3. Shift the transmission into R position.

4. Remove the center console, refer to the '98-01 Accord Service Manual (see page 20-83).

5. Remove the nut securing the shift cable end (A), then separate the shift cable end from the shift lever assembly.

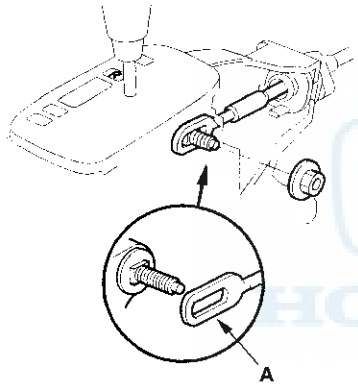

6. Rotate the socket holder (A) on the shift cable (B) counterclockwise a quarter turn, then slide the holder to remove the shift cable from the shift lever bracket base (C).

   NOTE: Do not remove the shift cable by twisting the shift cable guide pipe (D).

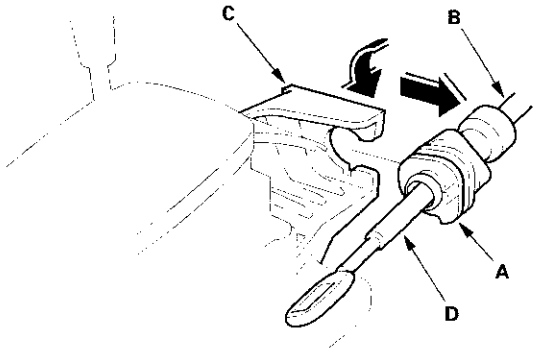

7. Remove the floor heat shield.

8. Remove the shift cable guide bracket (A) and grommet (B).

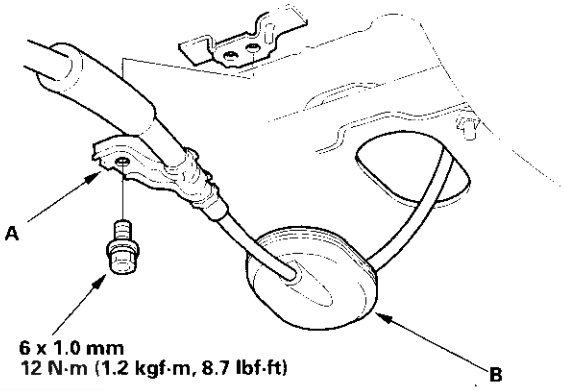

9. Remove the bolts securing the shift cable holder (A), then remove the shift cable cover (B).

   NOTE: To prevent damage to the control lever joint, remove the bolts securing the shift cable holder before removing the bolts securing the shift cable cover.

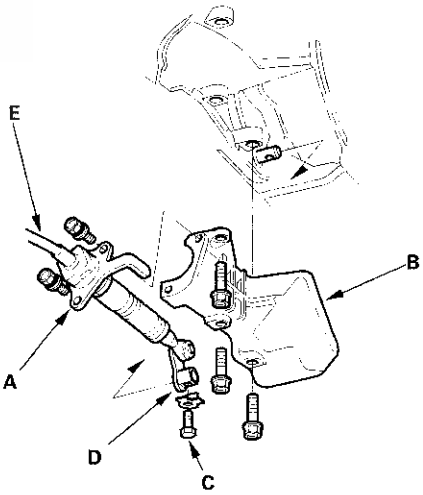

10. Remove the lock bolt (C) securing the control lever (D), then remove the shift cable (E) with the control lever.

(cont'd)

Shift Cable Replacement (cont'd)

11. Insert the new shift cable through the grommet hole, then install the shift cable guide bracket.

12. Verify that the transmission is in R position on the control shaft.

13. Install the control lever (A) with the shift cable (B) on the control shaft (C). Do not bend the shift cable excessively.

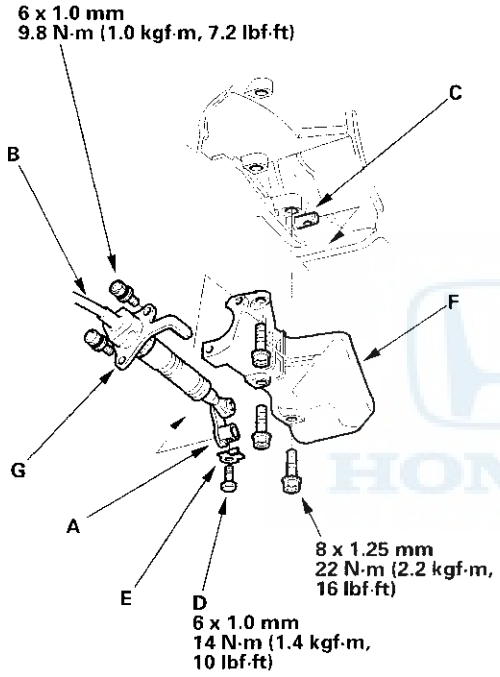

14. Install the lock bolt (D) with a new lock washer (E), then bend the lock washer tab against the bolt.

15. Install the shift cable cover (F), then install the shift cable holder (G) on the cover.

    NOTE: To prevent damage to the control lever joint, be sure to install the shift cable holder after installing the shift cable cover to the torque converter housing.

16. Install the floor heat shield.

17. Turn the ignition switch ON (II), and verify that the R position indicator light comes on.

18. If necessary, push the shift cable until it stops, then release your hand. Pull the shift cable back one step so that the shift position is in R.

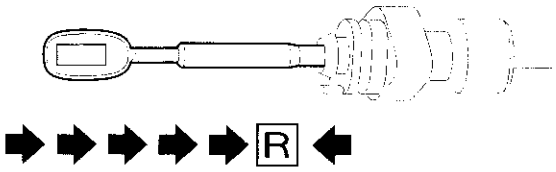

19. Turn the ignition switch OFF.

20. Insert a 6.0 mm (0.24 in.) pin (A) into the positioning hole (B) on the shift lever bracket base through the positioning hole on the shift lever assembly.

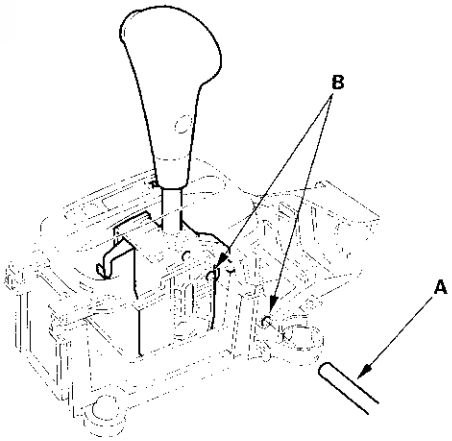

21. Rotate the socket holder (A) on the shift cable (B) counterclockwise a quarter turn, then slide the holder onto the shift lever bracket base (C). Install the shift cable end (D) over the mounting stud (E) by aligning its square hole (F) with the square shape (G) at the bottom of the stud. Rotate the holder clockwise a quarter turn to secure the shift cable.

    NOTE: Do not install the shift cable by twisting the shift cable guide (H).

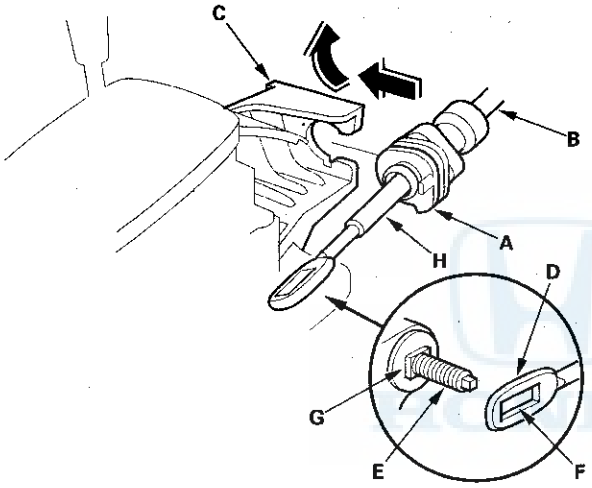

22. Verify that the shift cable end (A) is properly installed on the mounting stud (B).

Properly Installed:

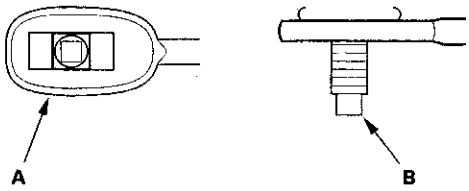

Not Properly Installed:

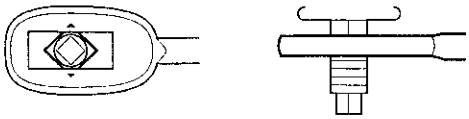

Cable end rides on the bottom of the mounting stud.

23. If not properly installed, remove the shift cable from the shift lever bracket base, and reinstall the shift cable. Do not install the shift cable end on the mounting stud while the shift cable is on the shift cable bracket base.

24. Install and tighten the nut.

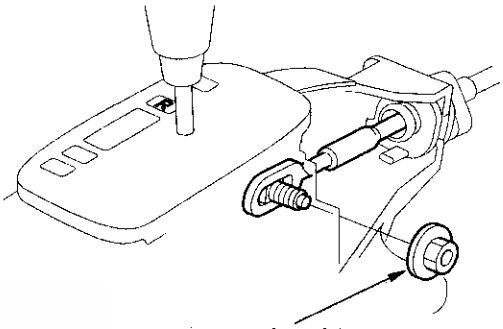

8 x 1.25 mm
22 N·m (2.2 kgf·m, 16 lbf·ft)

25. Remove the 6.0 mm (0.24 in.) pin that was installed to hold the shift lever.

26. Move the shift lever to each gear, and verify that the A/T gear position indicator follows the transmission range switch.

27. Start the engine, and check the shift lever operation in all gears.

Shift Cable Adjustment

1. Shift the transmission into R position.

2. Remove the center console, refer to '98-01 Accord Service Manual (see page 20-83).

3. Remove the nut securing the shift cable end (A), then separate the shift cable end from the shift lever assembly.

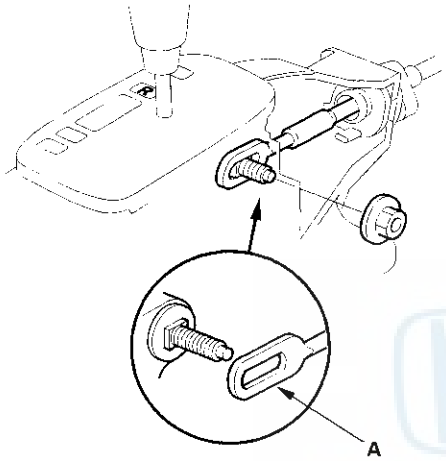

4. Rotate the socket holder (A) on the shift cable (B) counterclockwise a quarter turn, then slide the holder to remove the shift cable from the shift lever bracket base (C).

   NOTE: Do not remove the shift cable by twisting the shift cable guide (D).

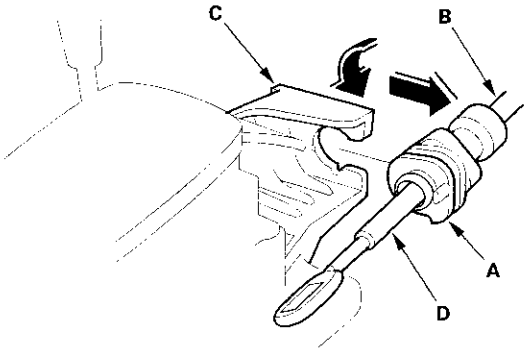

5. Push the shift cable until it stops, then release your hand. Pull the shift cable back one step so that the shift position is in R.

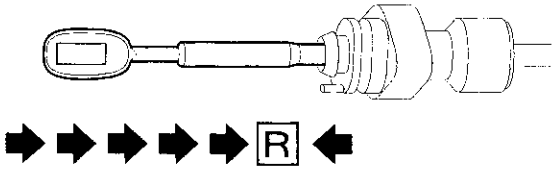

6. Turn the ignition switch ON (II), and verify that the R position indicator light comes on.

7. Turn the ignition switch OFF.

8. Insert a 6.0 mm (0.24 in.) pin (A) into the positioning hole (B) on the shift lever bracket base through the positioning hole on the shift lever assembly.

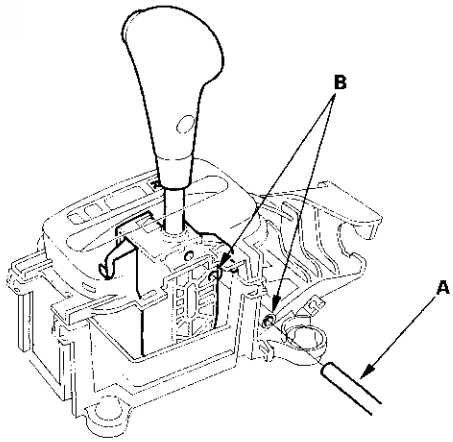

9. Rotate the socket holder (A) on the shift cable (B) counterclockwise a quarter turn, then slide the holder onto the shift lever bracket base (C). Install the shift cable end (D) over the mounting stud (E) by aligning its square hole (F) with the square shape (G) at the bottom of the stud. Rotate the holder clockwise a quarter turn to secure the shift cable.

   NOTE: Do not install the shift cable by twisting the shift cable guide (H).

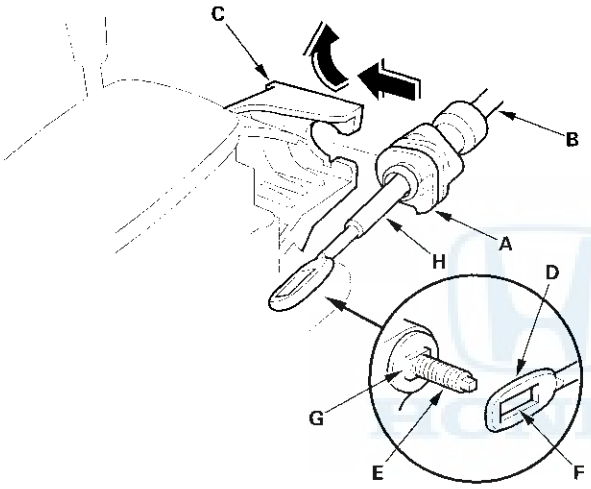

10. Verify that the shift cable end (A) is properly installed on the mounting stud (B).

Properly Installed:

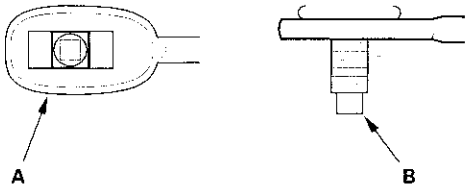

Not Properly Installed:

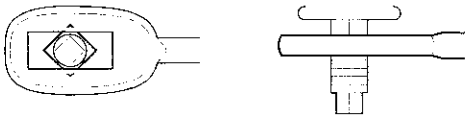

Cable end rides on the bottom of the mounting stud.

11. If not properly installed, remove the shift cable from the shift lever bracket base, and reinstall the shift cable. Do not install the shift cable end on the mounting stud while the shift cable is on the shift cable bracket base.

12. Install and tighten the nut.

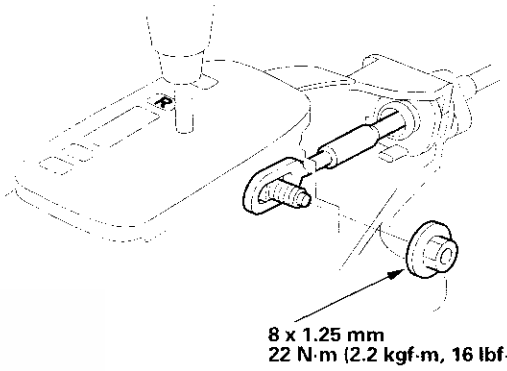

13. Remove the 6.0 mm (0.24 in.) pin that was installed to hold the shift lever.

14. Move the shift lever to each gear, and verify that the A/T gear position indicator follows the transmission range switch.

15. Push the shift lock release, and verify that the shift lever releases.

A/T Gear Position Indicator

Component Location Index

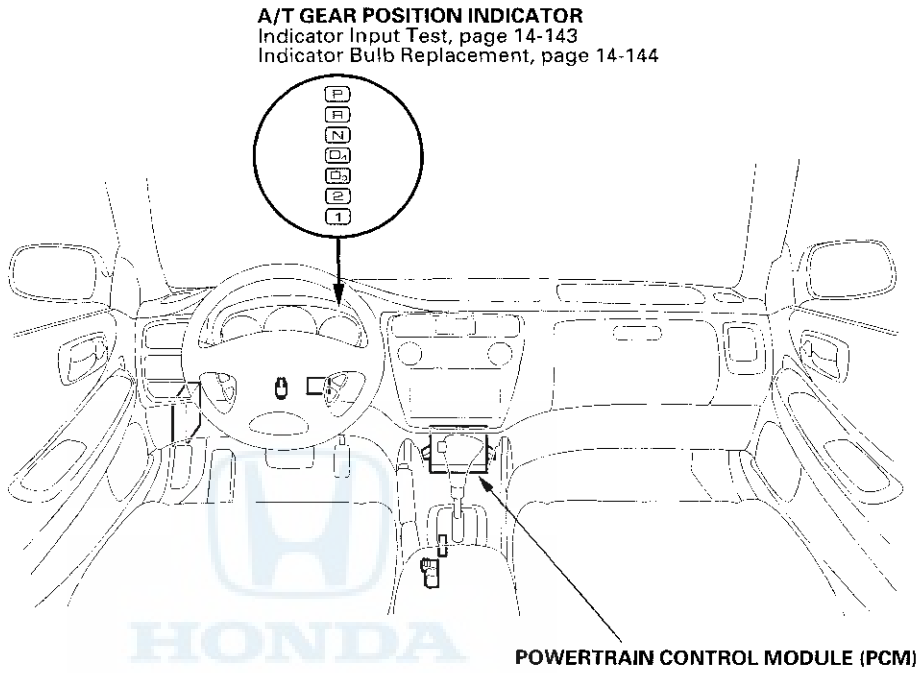

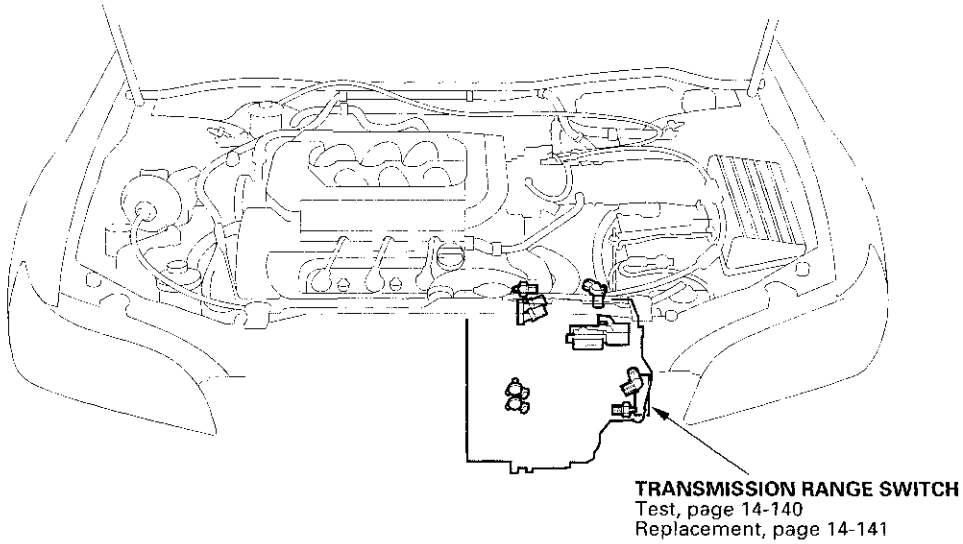

Circuit Diagram

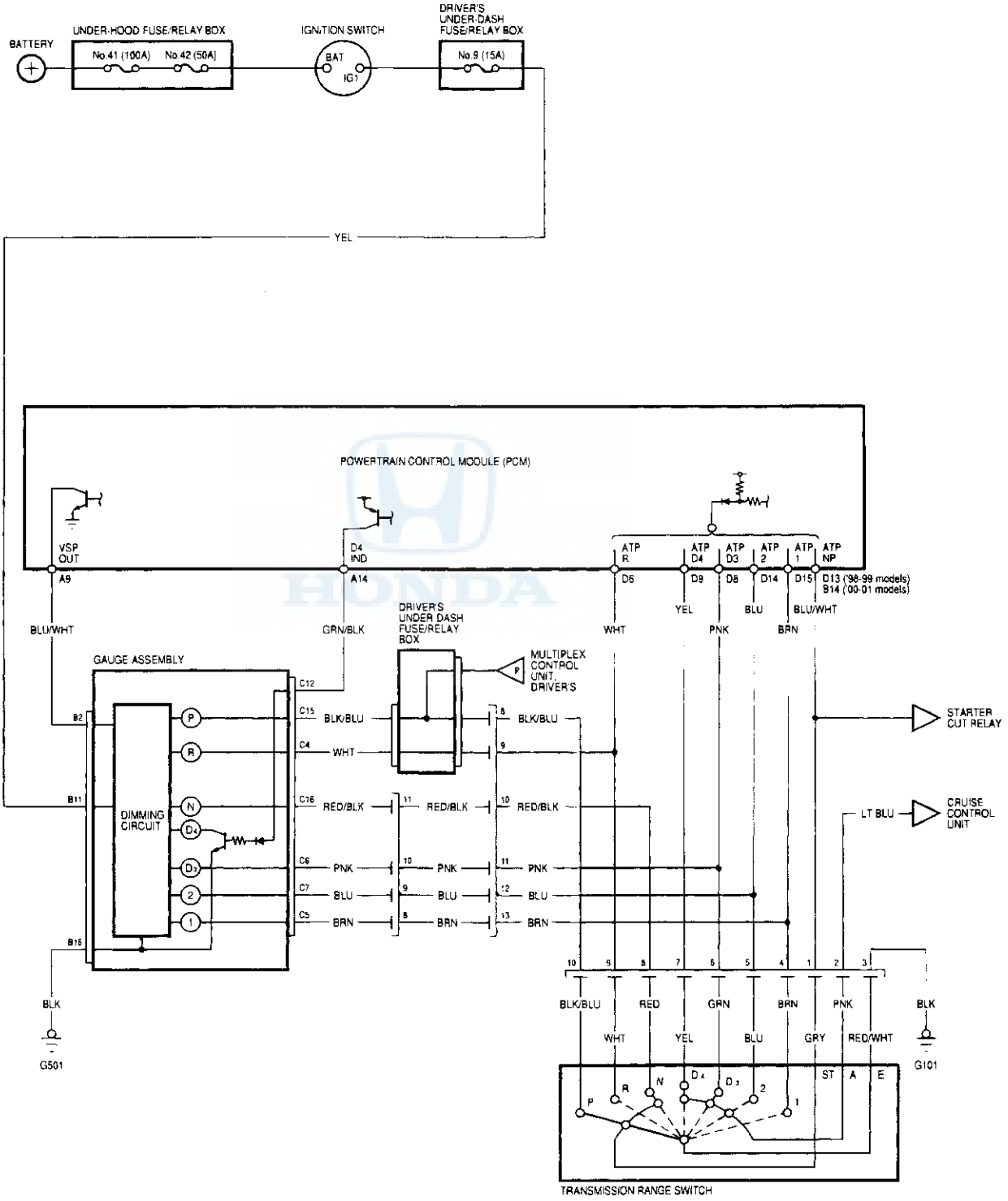

Transmission Range Switch Test

1. Remove the transmission range switch connector (A) from the connector bracket (B), then disconnect the transmission range switch connector.

2. Check for continuity between the terminals in each switch position according to the table below.

   NOTE: Terminal No.1: Neutral position switch

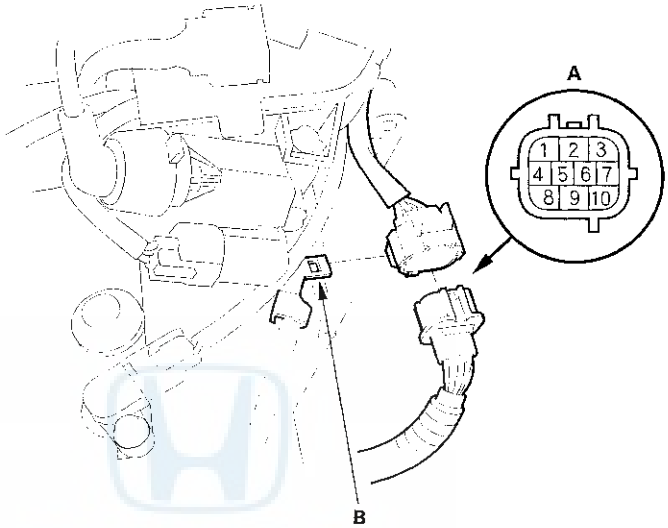

Transmission Range Switch Continuity Check

Position \ Terminal	1	2	3	4	5	6	7	8	9	10
P	○		○							○
R			○						○	
N	○		○					○		
D4		○	○				○			
D3		○	○			○				
2		○	○		○					
1			○	○						

Transmission Range Switch Replacement

1. Raise the front of the vehicle, and make sure it is securely supported, refer to the '98-01 Accord Service Manual (see page 1-15).

2. Set the parking brake, and block both rear wheels securely.

3. Shift to N position.

4. Remove the transmission range switch connector (A) from the connector bracket (B), then disconnect the transmission range switch connector.

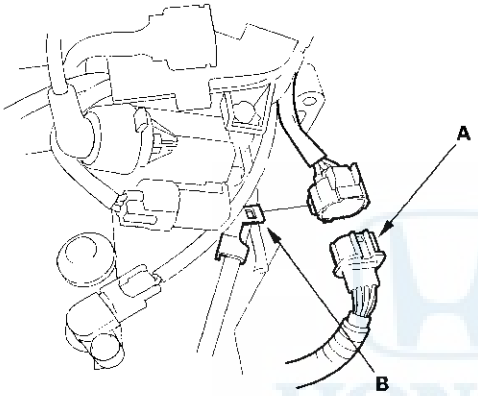

5. Remove the clamp from the harness clamp bracket on the transmission housing, and remove the harness clamp (A) from the end cover (B).

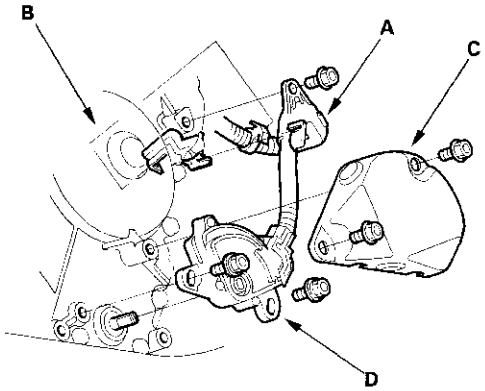

6. Remove the transmission range switch cover (C), then remove the transmission range switch (D) from the end cover.

7. Set the transmission range switch to N position.

   NOTE: The transmission range switch clicks in N position.

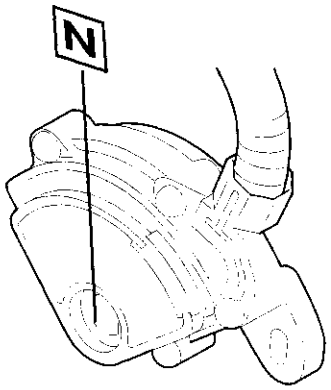

8. Set the control shaft to N position.

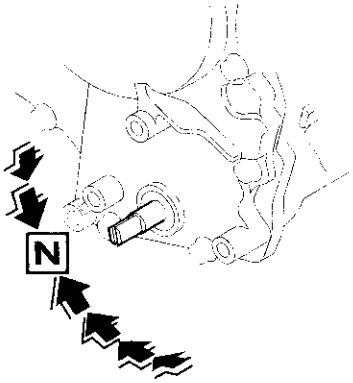

(cont'd)

Transmission Range Switch Replacement (cont'd)

9. Install the transmission range switch (A) on the control shaft (B), then secure it with the bolts.

   NOTE: Do not move the transmission range switch when tightening the bolts.

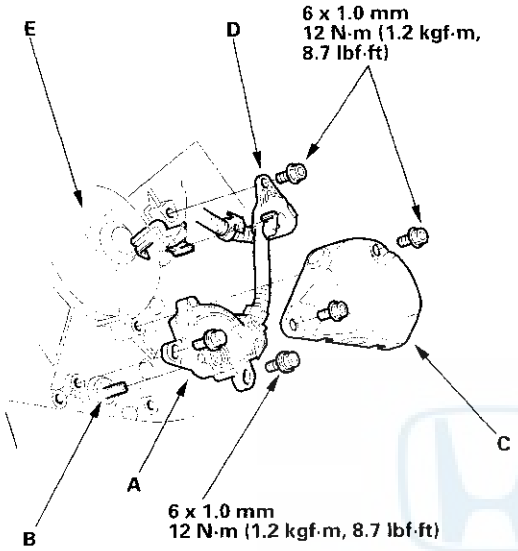

10. Install the transmission range switch cover (C), and the harness clamp (D) on the end cover (E).

11. Connect the transmission range switch connector (A), then install it on the connector bracket (B).

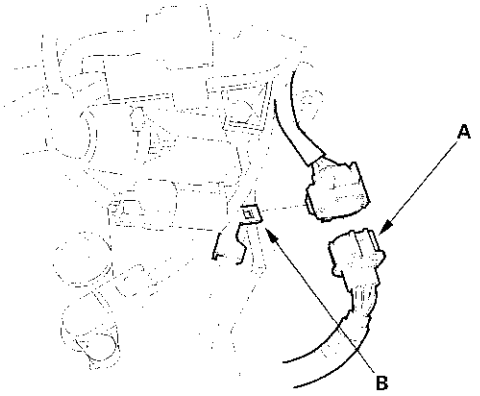

12. Turn the ignition switch ON (II). Move the shift lever through all gears, and check the transmission range switch synchronization with the A/T gear position indicator (A).

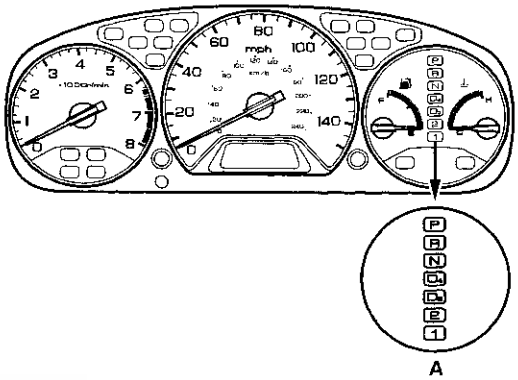

13. Move the shift lever through all gears, and verify the following:

   - The engine will not start in any position other than N or P.
   - The back-up lights come on when the shift lever is in R position.

Indicator Input Test

SRS components are located in this area. Review the SRS component locations, precautions, and procedures in the SRS section before performing repairs or service, refer to the '98-01 Accord Service Manual (see page 23-28).

1. Remove the instrument panel, refer to the '98-01 Accord Service Manual (see page 20-84).

2. Remove the gauge assembly from the dashboard, refer to the '98-01 Accord Service Manual (see page 22-68), then disconnect the gauge assembly B (22P) and C (16P) connectors.

3. Inspect the connectors and connector terminals to be sure they are all making good contact.
   - If the terminals are bent, loose, or corroded, repair them as necessary, and recheck the system.
   - If the terminals look OK, make the following input tests at the gauge assembly B (22P) and C (16P) connectors.
     - If a test indicates a problem, find a correct the cause, then recheck the system.
     - If all the input tests prove OK, but the indicator is faulty, replace the printed circuit board.

GAUGE ASSEMBLY CONNECTORS

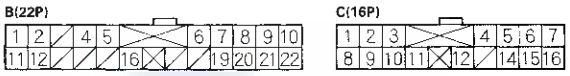

Wire side of female terminals

Cavity	Wire Color	Test Condition	Test: Desired Result	Possible Cause (If result is not obtained)
B11	YEL	Ignition switch ON (II)	Check for voltage to ground: There should be battery voltage.	• Blown No. 9 (7.5 A) fuse in the driver's under-dash fuse/relay box • An open in the wire
B16	BLK	Under all conditions	Check for continuity to ground: There should be continuity.	• Poor ground (G501) • An open in the wire
C4	WHT	Ignition switch ON (II) and shift lever in R	Check for voltage to ground: There should be 1 V or less. There should be battery voltage in any other shift lever position.	• Faulty transmission range switch • An open in the wire
C5	BRN	Ignition switch ON (II) and shift lever in 1		
C6	PNK	Ignition switch ON (II) and shift lever in D3		
C7	BLU	Ignition switch ON (II) and shift lever in 2		
C12	GRN/BLK	Ignition switch ON (II) and shift lever in D4	Check for voltage to ground: There should be battery voltage.	• Faulty transmission range switch • Faulty PCM • An open in the wire
C15	BLK/BLU	Shift lever in P	Check for continuity to ground: There should be no continuity in any other shift lever position.	• Faulty transmission range switch • An open in the wire
C16	RED/BLK	Ignition switch ON (II) and shift lever in N	Check for voltage to ground: There should be 1 V or less. There should be battery voltage in any other shift lever position.	

Indicator Bulb Replacement

SRS components are located in this area. Review the SRS component locations, precautions, and procedures in the SRS section before performing repairs or service, refer to the '98-01 Accord Service Manual (see page 23-28).

1. Remove the instrument panel, refer to the '98-01 Accord Service Manual (see page 20-84).

2. Remove the gauge assembly, refer to the '98-01 Accord Service Manual (see page 22-68).

3. Disassemble the gauge assembly, refer to the '98-01 Accord Service Manual (see page 22-68).

   NOTE: Disassembly is not required on all models.

4. Replace the bulbs (A) at the reverse side of the gauge assembly (B).

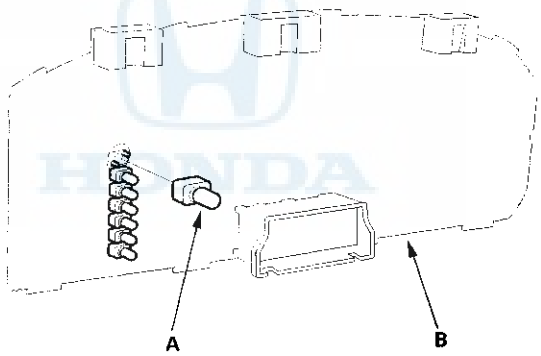

Component Location Index

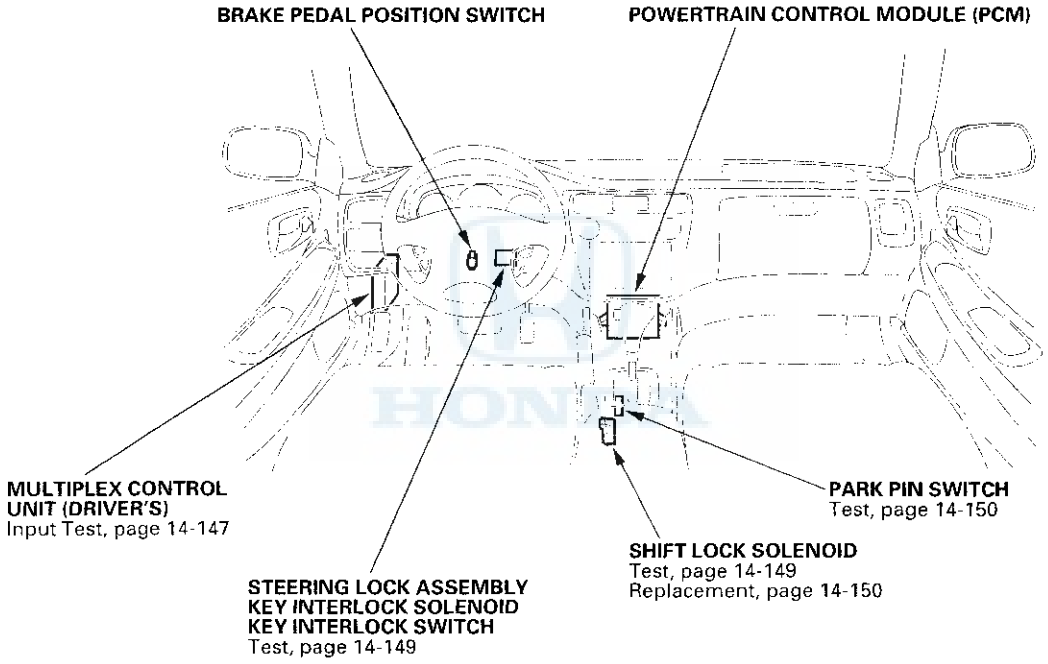

A/T Interlock System

Circuit Diagram

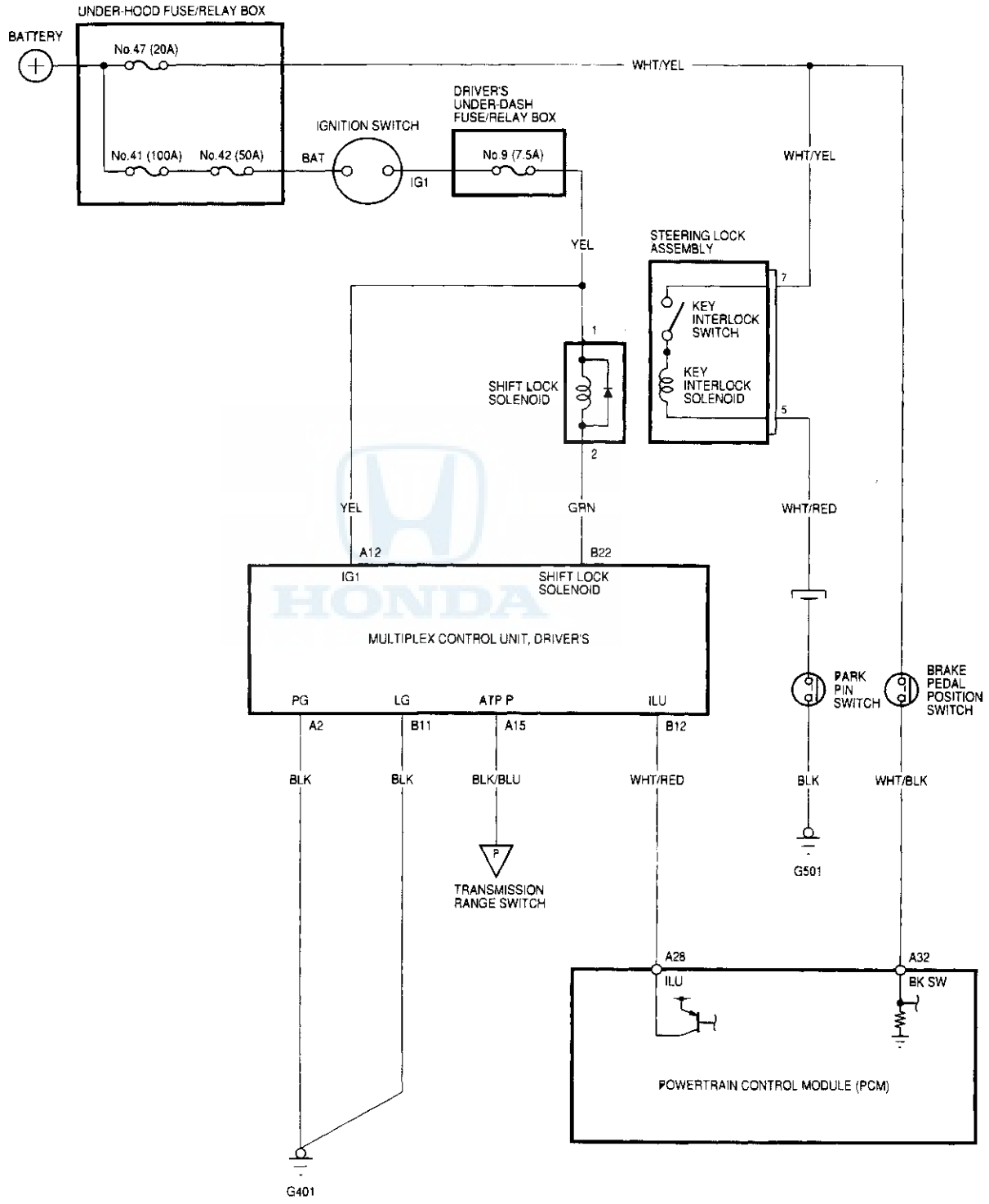

Control Unit Input Test

SRS components are located in this area. Review the SRS component locations, precautions, and procedures in the SRS section before performing repairs or service, refer to the '98-01 Accord Service Manual (see page 23-28).

1. Disconnect the 22P connector from the multiplex control unit (driver's), then remove the multiplex control unit (driver's) from the driver's under-dash fuse/relay box.

2. Inspect the connectors and connector terminals to be sure they are all making good contact.

   - If the terminals are bent, loose, or corroded, repair them as necessary, and recheck the system.
   - If the terminals look OK, go to step 3.

   NOTE: If the shift lock solenoid clicks when the ignition switch is turned ON (II) while depressing the brake pedal with the shift lever in P position, the shift lock system is OK. If the shift lever cannot be shifted from P position, test the transmission range switch.

3. With the driver's unit still disconnected from its connector and the fuse/relay box, make these input tests at its connector or its fuse/relay box socket.

   - If a test indicates a problem, find and correct the cause, then recheck the system.
   - If all the input tests prove OK, go to step 4.

(cont'd)

Control Unit Input Test (cont'd)

MULTIPLEX CONTROL UNIT, DRIVER'S CONNECTORS

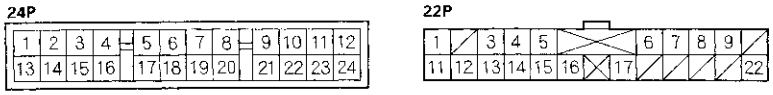

Terminal side of male terminals — Wire side of female terminals

Multiplex Control Unit (Driver's) 24P Connector

Cavity	Wire Color	Test Condition	Test: Desired Result	Possible Cause (If result is not obtained)
A3	——	Shift lever in P	Check for continuity to ground: There should be continuity.	• Faulty transmission range switch • Poor ground (G101) • An open in the wire
A12	——	Under all conditions	Check for voltage to ground: There should be battery voltage.	• Blown No. 13 (7.5A) fuse in the passenger's under-dash fuse/relay box • Faulty passenger's under-dash fuse/relay box • An open in the wire
A14	——	Under all conditions	Check for continuity to ground: There should be continuity.	• Poor ground (G401) • An open in the wire
A24	——	Ignition switch turned ON (II)	Check for voltage to ground: There should be battery voltage.	• Blown No. 9 (7.5 A) fuse in the driver's under-dash fuse/relay box • An open in the wire

Multiplex Control Unit (Driver's) 22P Connector

Cavity	Wire Color	Test Condition	Test: Desired Result	Possible Cause (If result is not obtained)
B11	BLK	Under all conditions	Check for continuity to ground: There should be continuity.	• Poor ground (G503) • An open in the wire
B22	GRN	Ignition switch ON (II)	Check for voltage to ground: There should be battery voltage.	• Blown No. 9 (7.5A) fuse in the driver's under-dash fuse/relay box • Faulty shift lock solenoid • An open in the wire

4. Reconnect the connectors to the multiplex control unit (driver's), and make this input test.

B12	WHT/RED	Ignition switch ON (II) and brake pedal pushed	Check for voltage to ground: There should be battery voltage.	• Faulty brake pedal position switch • Faulty PCM • Faulty multiplex control unit (driver's) • An open in the wire
		Ignition switch ON (II), brake pedal and accelerator pedal pressed at the same time	Check for voltage to ground: There should be 1 V or less.	

- If a test indicates a problem, find and correct the cause, then recheck the system.
- If all the input tests prove OK, substitute a known-good multiplex control unit (driver's), and recheck the system. If the system is OK, the multiplex control unit (driver's) must be faulty; replace it.

Key Interlock Solenoid/Switch Test

SRS components are located in this area. Review the SRS component locations, precautions, and procedures in the SRS section before performing repairs or service, refer to the '98-01 Accord Service Manual (see page 23-28).

1. Remove the driver's dashboard lower cover, refer to the '98-01 Accord Service Manual (see page 20-84).

2. Disconnect the key switch 7P connector from the steering lock assembly.

3. Check for continuity between the No. 5 and No. 7 terminals when the key is pushed, and check for no continuity when the key is released.

KEY SWITCH CONNECTOR (7P)

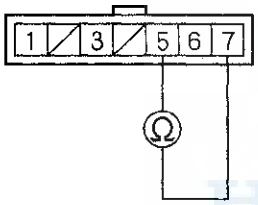

Terminal side of male terminals

4. Check that the key cannot be removed with power connected to the No. 7 terminal and ground connected to the No. 3 terminals.

   - If the key cannot be removed, the key interlock solenoid is OK.
   - If the key can be removed, replace the steering lock assembly (the key interlock solenoid is not available separately).

Shift Lock Solenoid Test

1. Remove the center console, refer to the '98-01 Accord Service Manual (see page 20-83).

2. Disconnect the shift lock solenoid 2P connector.

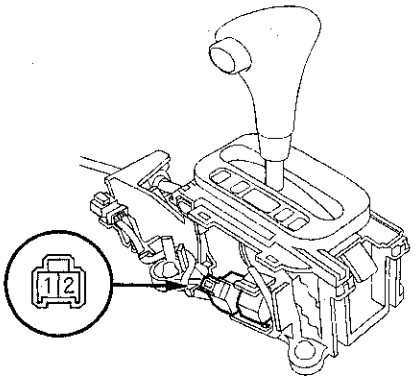

3. Connect the No. 1 terminal of the shift lock solenoid connector to the battery positive terminal, and connect the No. 2 terminal to the battery negative terminal.

4. Check that the shift lever can be moved from the P position. Release the battery terminals from the shift lock solenoid connector. Move the shift lever back to the P position, and make sure it locks.

   NOTE: Do not connect power to the No. 2 terminal (reverse polarity) or you will damage the diode inside the solenoid.

5. Check that the shift lock releases when the release lever is pushed, and check that it locks when the release lever is released.

6. If the solenoid does not work, replace it.

Shift Lock Solenoid Replacement

1. Remove the center console, refer to the '98-01 Accord Service Manual (see page 20-83).
2. Disconnect the shift lock solenoid 2P connector.
3. Pry the shift lock solenoid clamp (A) with a screwdriver, then remove the shift lock solenoid (B).

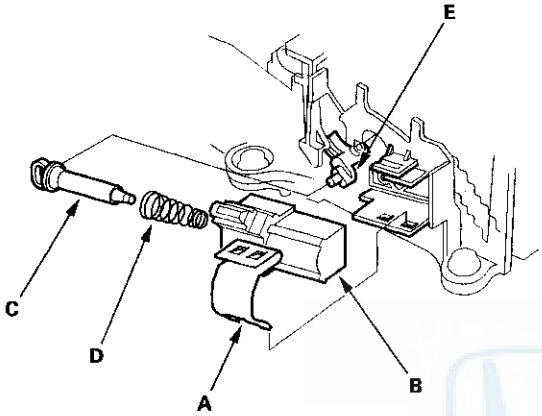

4. Install the shift lock solenoid plunger (C) and plunger spring (D) in the new shift lock solenoid.
5. Install the shift lock solenoid by aligning the joint of the shift lock solenoid with the tip of the shift lock stop (E).
6. Secure the shift lock solenoid with the clamp, then connect the shift lock solenoid connector.

Park Pin Switch Test

1. Remove the center console, refer to the '98-01 Accord Service Manual (see page 20-83).
2. Disconnect the park pin 4P connector.

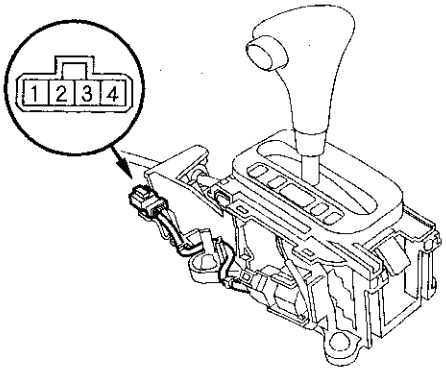

3. Shift the shift lever into the P position, then check for continuity between the No. 3 and No. 4 terminals. There should be no continuity.
4. Shift the shift lever out of the P position, and check for continuity between the terminals in step 3. There should be continuity.
5. If the park pin switch is faulty, replace the shift lever bracket base.

   NOTE: The park pin switch is not available separately from the shift lever bracket base.

End Cover Removal

Exploded View

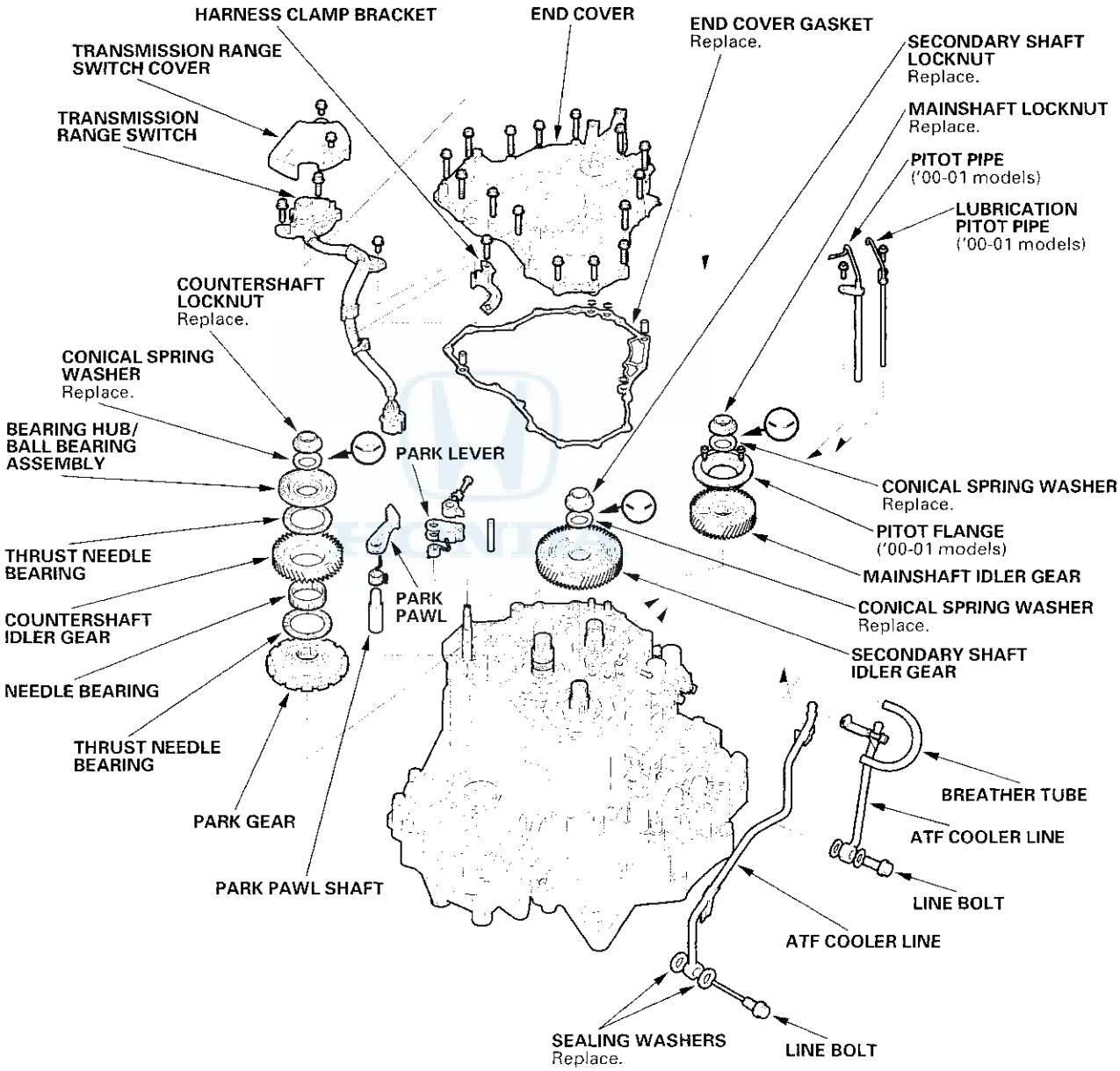

(cont'd)

End Cover Removal (cont'd)

Special Tools Required
Mainshaft holder
07GAB-PF50101 or 07GAB-PF50100

NOTE: Refer to the Exploded View as needed during the following procedure.

1. Remove the transmission range switch cover.
2. Remove the bolts securing the harness clamp (one bolt) and transmission range switch (two bolts), then remove the transmission range switch.
3. Remove the bolts securing the end cover (sixteen bolts), then remove the end cover.
4. For '00-01 models: Remove the pitot pipe (A) and the lubrication pitot pipe (B) from the transmission housing (C), then remove the pitot flange (D) from the mainshaft idler gear (E).

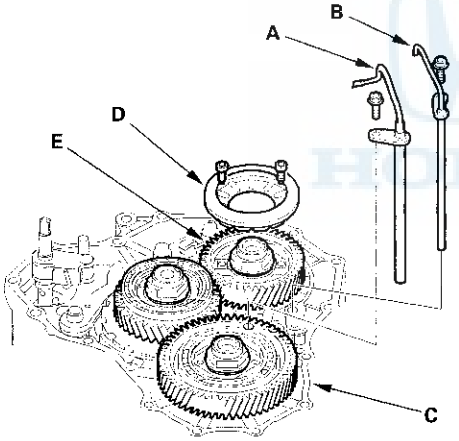

5. Slip the special tool onto the mainshaft.

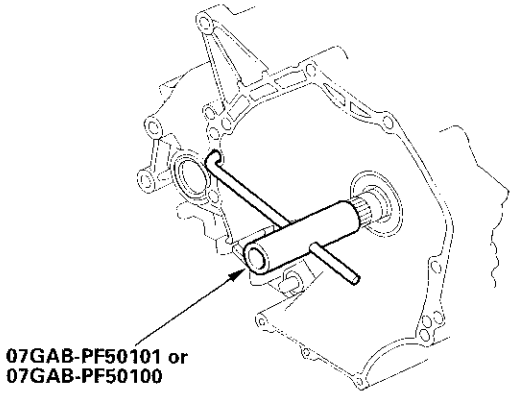

6. Engage the park pawl with the park gear.
7. Cut the lock tabs (A) of each shaft locknut (B) using a chisel (C). Then remove the locknuts and conical spring washers from each shaft.

   NOTE:
   - Countershaft and secondary shaft locknuts have left-hand threads.
   - Clean the old locknuts; they are used to install the press fit idler gears on the mainshaft and secondary shaft, and the park gear and bearing hub on the countershaft.
   - Keep all of the chiseled particles out of the transmission.

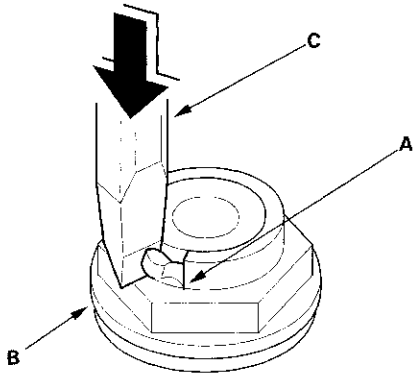

8. Remove the special tool (mainshaft holder) from the mainshaft.

9. Remove the mainshaft idler gear (A) and the secondary shaft idler gear (B) with a puller (C).

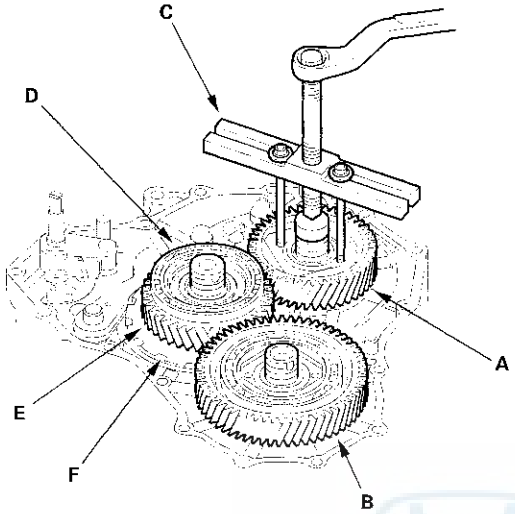

10. Remove the bearing hub (D) with the puller from the countershaft, then remove the countershaft idler gear (E) and bearings.

11. Remove the park gear (F) with the puller.

12. Remove the park pawl, spring, shaft, and shaft stop.

13. Remove the park lever from the control shaft.

14. Remove the line bolts, then remove the ATF cooler lines.

Park Lever Stop Inspection and Adjustment

1. Set the park lever (A) in the P position.

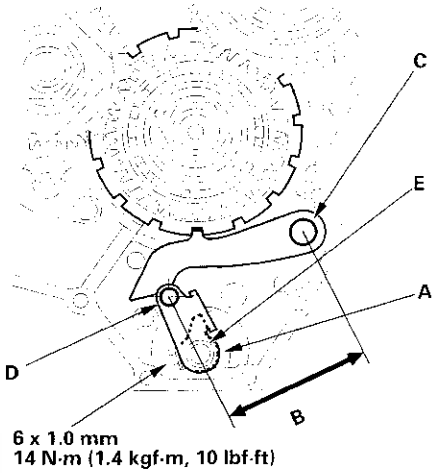

2. Measure the distance (B) between the park pawl shaft (C) and the park lever roller pin (D).

   STANDARD: 84.6 – 85.6 mm (3.33 – 3.37 in.)

3. If the measurement is out of tolerance, select and install the appropriate park lever stop (E) from the table below.

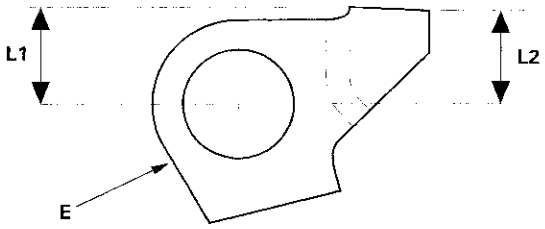

PARK LEVER STOP

Mark	Part Number	L1	L2
1	24537-PA9-003	11.00 mm (0.433 in.)	11.00 mm (0.433 in.)
2	24538-PA9-003	10.80 mm (0.425 in.)	10.65 mm (0.419 in.)
3	24539-PA9-003	10.60 mm (0.417 in.)	10.30 mm (0.406 in.)

4. After replacing the park lever stop, make sure the distance is within tolerance.

Housing and Shaft Assemblies Removal

Exploded View

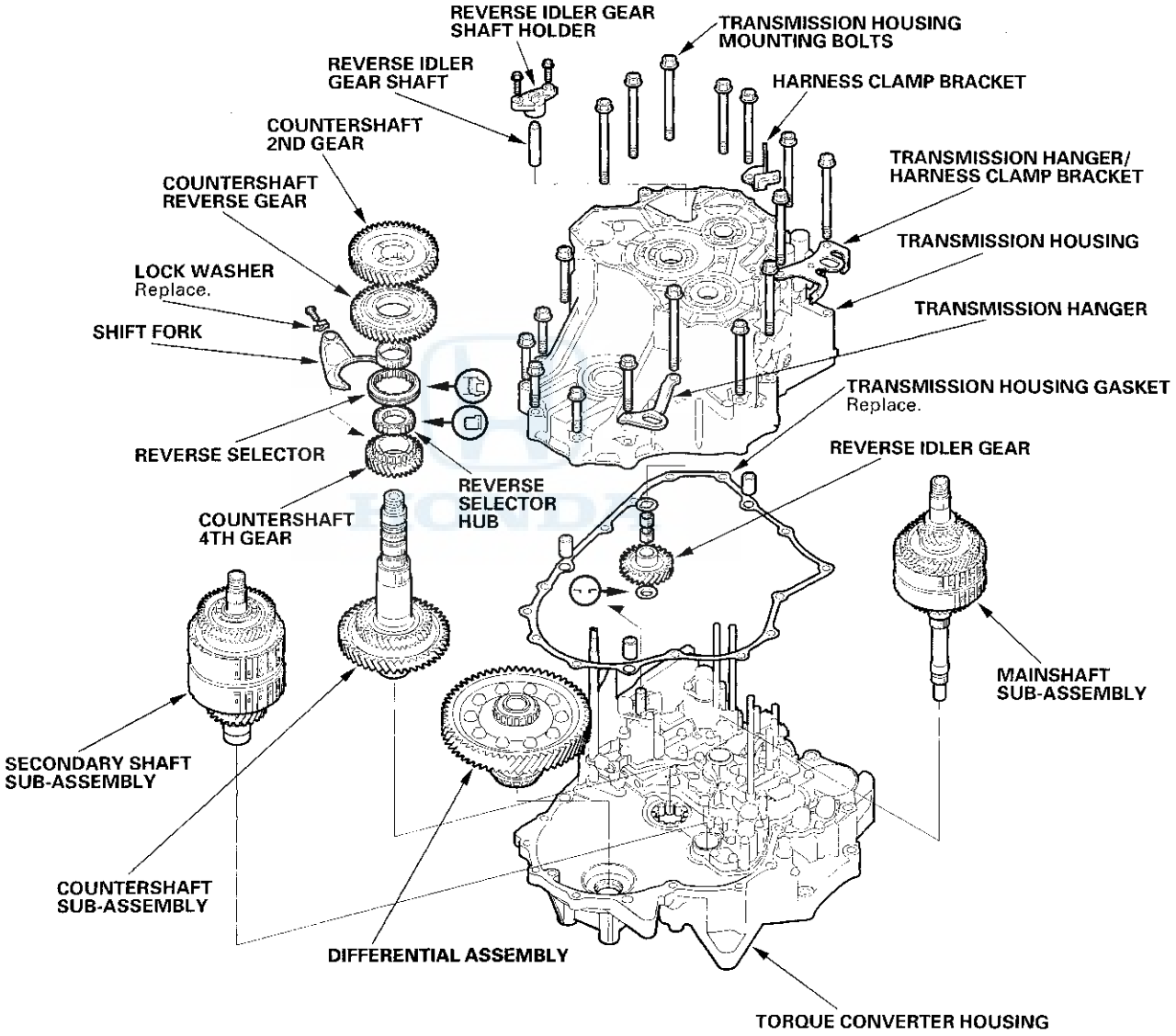

Special Tools Required
Housing puller 07HAC-PK40102

NOTE: Refer to the Exploded View as needed during the following procedure.

1. Remove the two bolts securing the reverse idler gear shaft holder, then remove the reverse idler gear shaft holder (A), shaft (B), and washer (C).

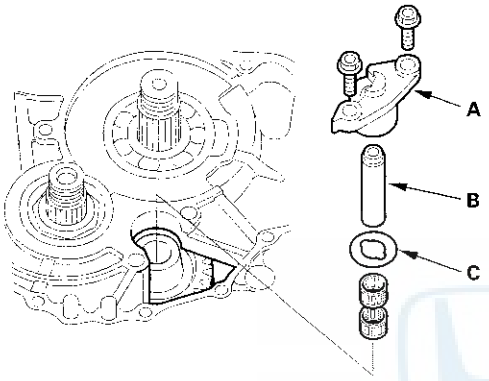

2. Remove the transmission housing mounting bolts, transmission hangers, and harness clamp bracket.

3. Move the reverse idler gear (A) to disengage it from the mainshaft and countershaft reverse gears.

   NOTE: The transmission housing will not separate from the torque converter housing if the reverse idler gear is not moved.

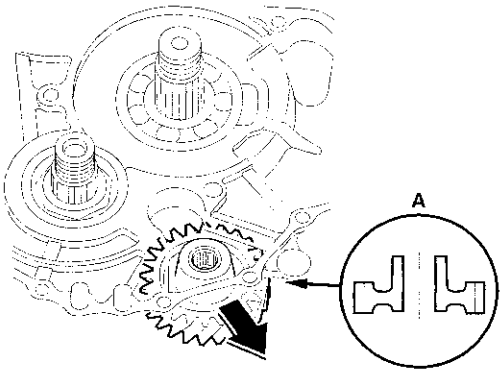

4. Align the spring pin (A) on the control shaft (B) with the transmission housing groove (C) by turning the control shaft.

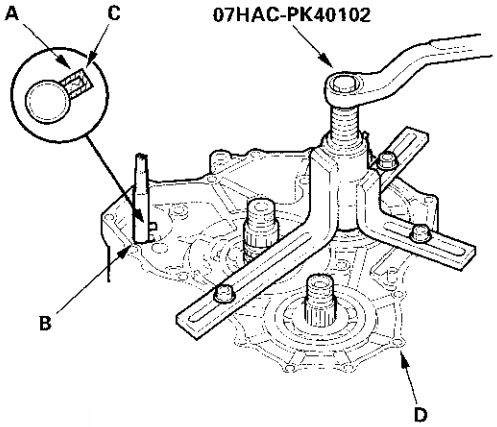

5. Install the special tool over the mainshaft, then remove the transmission housing (D).

   NOTE: If the top arm of your housing puller is too short, replace it with Housing Puller Arm, 205 mm, 07SAC-P0Z0101.

6. Remove the reverse idler gear, needle bearings, and thrust washer from the transmission housing.

7. Remove the countershaft 2nd gear, then remove the countershaft reverse gear and the needle bearing.

8. Remove the lock bolt securing the shift fork, then remove the shift fork with the reverse selector, reverse selector hub, and countershaft 4th gear. If the reverse selector hub is press-fitted, leave it and 4th gear on the countershaft.

9. Remove the secondary shaft sub-assembly. If the reverse selector hub is press-fitted, remove the secondary shaft sub-assembly, countershaft sub-assembly and mainshaft sub-assembly together.

10. Remove the countershaft sub-assembly.

11. Remove the mainshaft sub-assembly.

12. Remove the differential assembly.

Bearing Replacement

Special Tools Required
- Driver 07749-0010000
- Seal driver attachment 07GAD-PG40101
- Attachment, 62 x 68 mm 07746-0010500
- Attachment, 72 x 75 mm 07746-0010600

NOTE: Coat all parts with ATF before assembly.

1. To remove the mainshaft bearing (A), countershaft bearing (B) and secondary shaft bearing (C) from the transmission housing, expand each snap ring with the snap ring pliers, then push the bearing out.

   NOTE: Do not remove the snap rings unless it's necessary to clean the grooves in the housing.

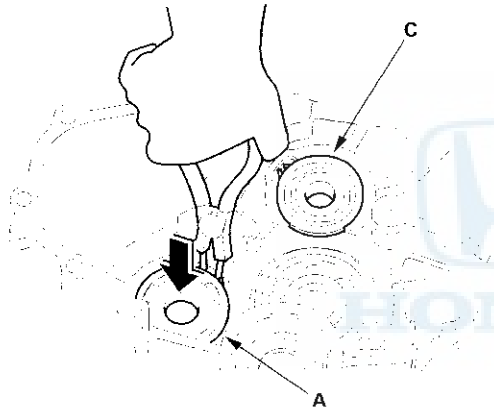

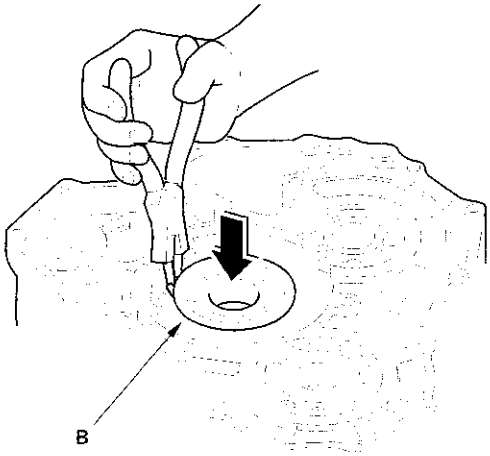

2. Install the bearings in the direction shown.

3. Expand each snap ring with the snap ring pliers, and insert the bearing part-way into the housing.

4. Release the pliers, then push the bearing down into the housing until the snap ring snaps in place around it.

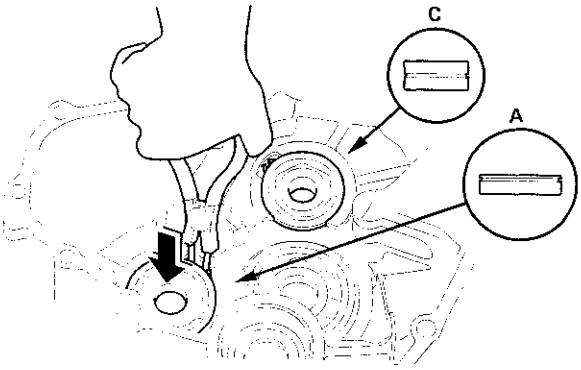

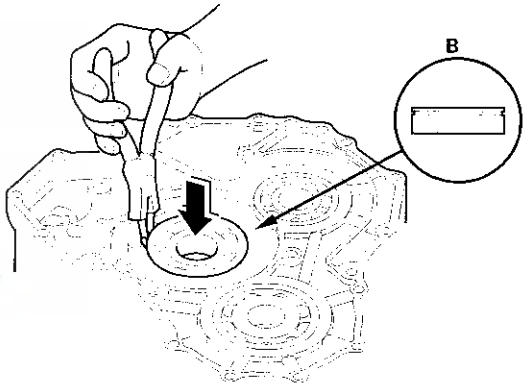

5. After installing the bearings verify the following:

   - The snap rings (A) are seated in the bearing and housing grooves.
   - The ring end gaps (B) are correct.

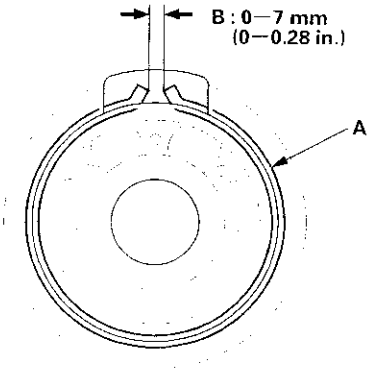

Valve Bodies and ATF Strainer Removal

Exploded View

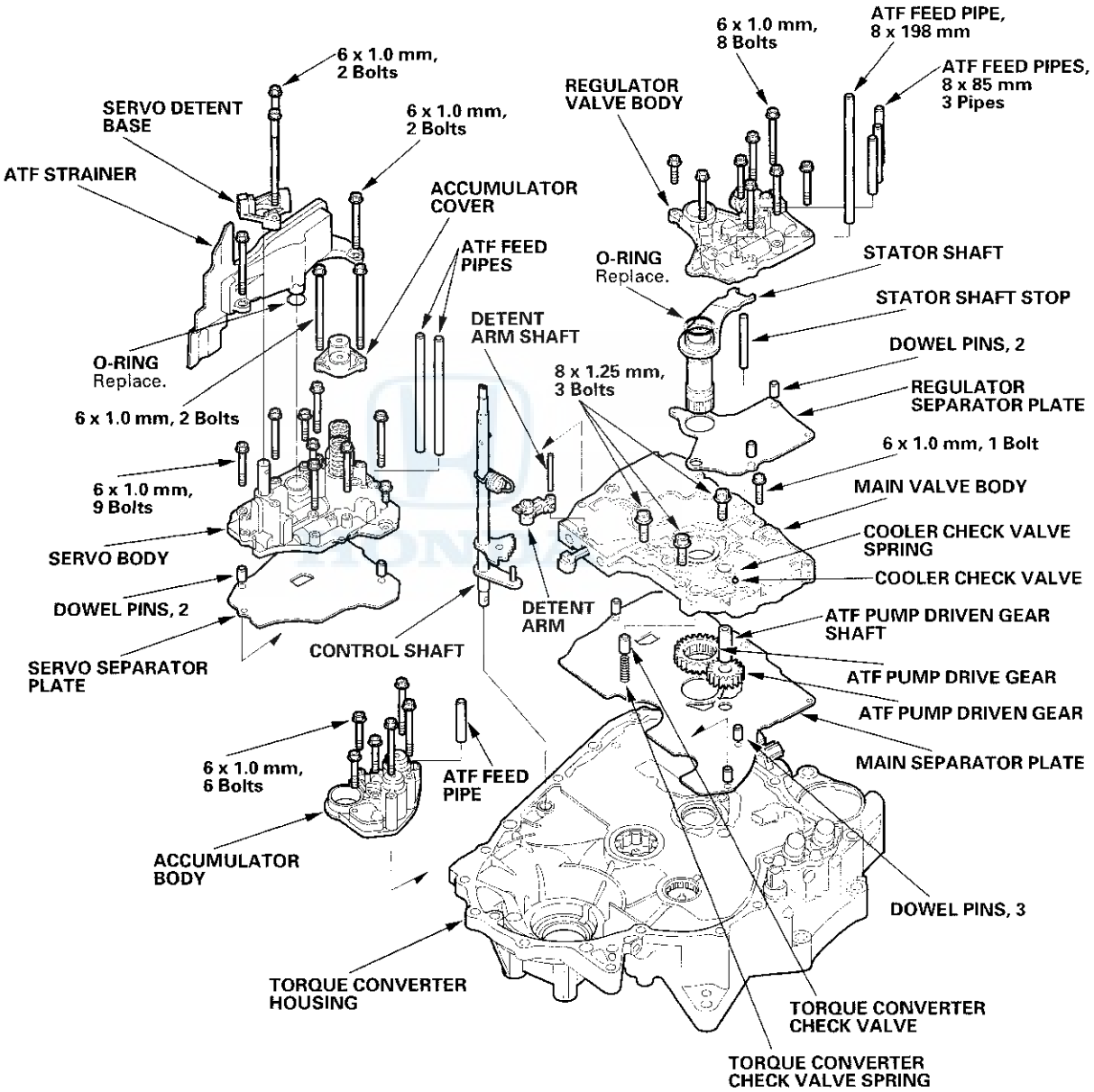

(cont'd)

Valve Bodies and ATF Strainer Removal (cont'd)

NOTE: Refer to the Exploded View as needed during the following procedure.

1. Remove the ATF feed pipes from the regulator valve body, servo body, and accumulator body.
2. Remove the servo detent base (two bolts).
3. Remove the ATF strainer (two bolts).
4. Remove the accumulator cover (two bolts).

   NOTE: The accumulator cover is spring loaded. To prevent stripping the threads in the servo body, press down on the accumulator cover while unscrewing the bolts in a crisscross pattern.

5. Remove the bolts securing the servo body (nine bolts), then remove the servo body, servo separator plate and dowel pins (two).
6. Remove the accumulator body (six bolts).
7. Remove the regulator valve body (eight bolts).
8. Remove the stator shaft and stator shaft stop.
9. Remove the regulator separator plate and dowel pins (two).
10. Unhook the detent spring from the detent arm, then remove the detent arm shaft, detent arm, and control shaft.
11. Remove the cooler check valve spring and cooler check valve (steel ball).
12. Remove the main valve body (four bolts).
13. Remove the torque converter check valve and spring.
14. Remove the ATF pump driven gear shaft, then remove the ATF pump gears.
15. Remove the main separator plate and dowel pins (three).
16. Clean the inlet opening (A) of the ATF strainer (B) thoroughly with compressed air, then check that it is in good condition, and the inlet opening is not clogged.

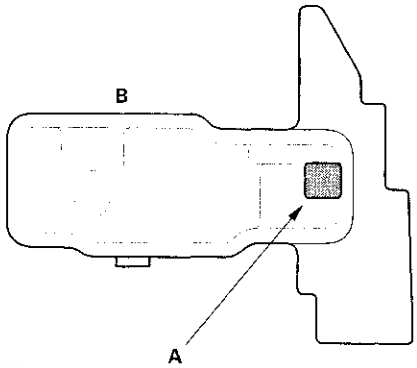

17. Test the ATF strainer by pouring clean ATF through the inlet opening, and replace it if it is clogged or damaged.

Valve Body Repair

NOTE: This repair is only necessary if one or more of the valves in a valve body do not slide smoothly in their bores. Use this procedure to free the valves.

1. Soak a sheet of # 600 abrasive paper in ATF for about 30 minutes.

2. Carefully tap the valve body so the sticking valve drops out of its bore. It may be necessary to use a small screwdriver to pry the valve free. Be careful not to scratch the bore with the screwdriver.

3. Inspect the valve for any scuff marks. Use the ATF-soaked # 600 paper to polish off any burrs that are on the valve, then wash the valve in solvent and dry it with compressed air.

4. Roll up half a sheet of ATF-soaked # 600 paper and insert it in the valve bore of the sticking valve. Twist the paper slightly, so that it unrolls and fits the bore tightly, then polish the bore by twisting the paper as you push it in and out.

   NOTE: The valve body is aluminum and doesn't require much polishing to remove any burrs.

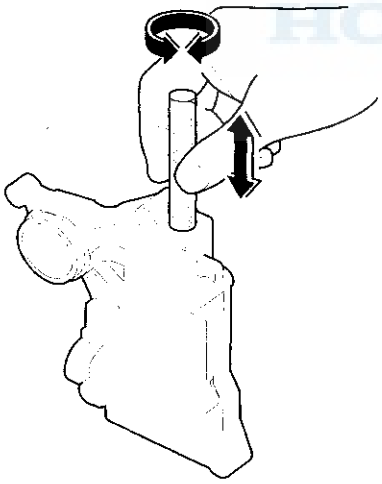

5. Remove the # 600 paper. Thoroughly wash the entire valve body in solvent, then dry it with compressed air.

6. Coat the valve with ATF, then drop it into its bore. It should drop to the bottom of the bore under its own weight. If not, repeat step 4, then retest. If the valve still sticks, replace the valve body.

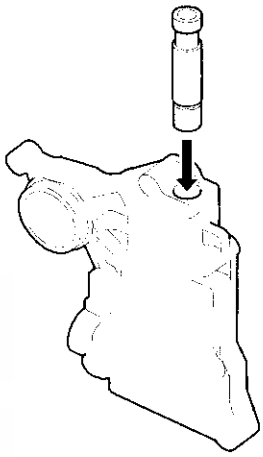

7. Remove the valve, and thoroughly clean it and the valve body with solvent. Dry all parts with compressed air, then reassemble using ATF as a lubricant.

Valve Body Valve Reassembly

1. Coat all parts with ATF before assembly.

2. Install the valves and springs in the sequence shown for the main valve body (see page 14-161), regulator valve body (see page 14-164), and servo body (see page 14-165). Refer to the following valve cap illustrations, and install each valve cap so the end shown facing up will be facing the outside of the valve body.

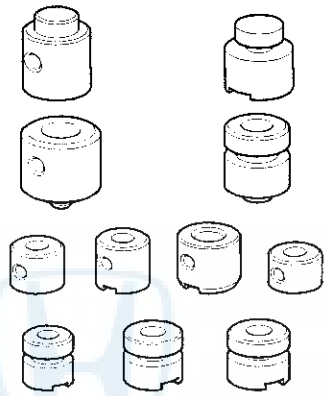

3. Install all the springs and seats. Insert the spring (A) in the valve, then install the valve in the valve body (B). Push the spring in with a screwdriver, then install the spring seat (C).

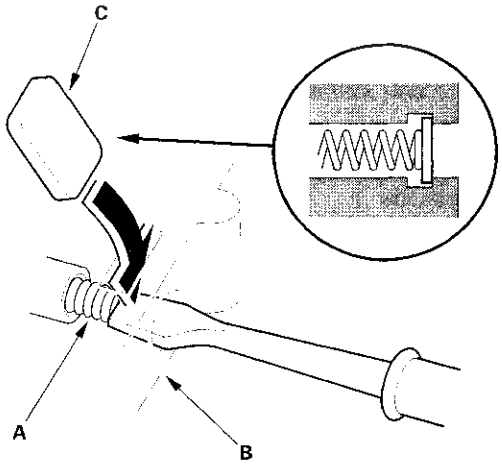

Main Valve Body Disassembly, Inspection, and Reassembly

1. Clean all parts thoroughly in solvent or carburetor cleaner, and dry them with compressed air. Blow out all passages.
2. Do not use a magnet to remove the check valve ball; it may magnetize the ball.
3. Check all valves for free movement. If any fail to slide freely, refer to Valve Body Repair (see page 14-159).
4. Replace the valve body as an assembly if any parts worn or damaged.
5. Coat all parts with ATF during assembly.
6. Install the filter in the direction shown.

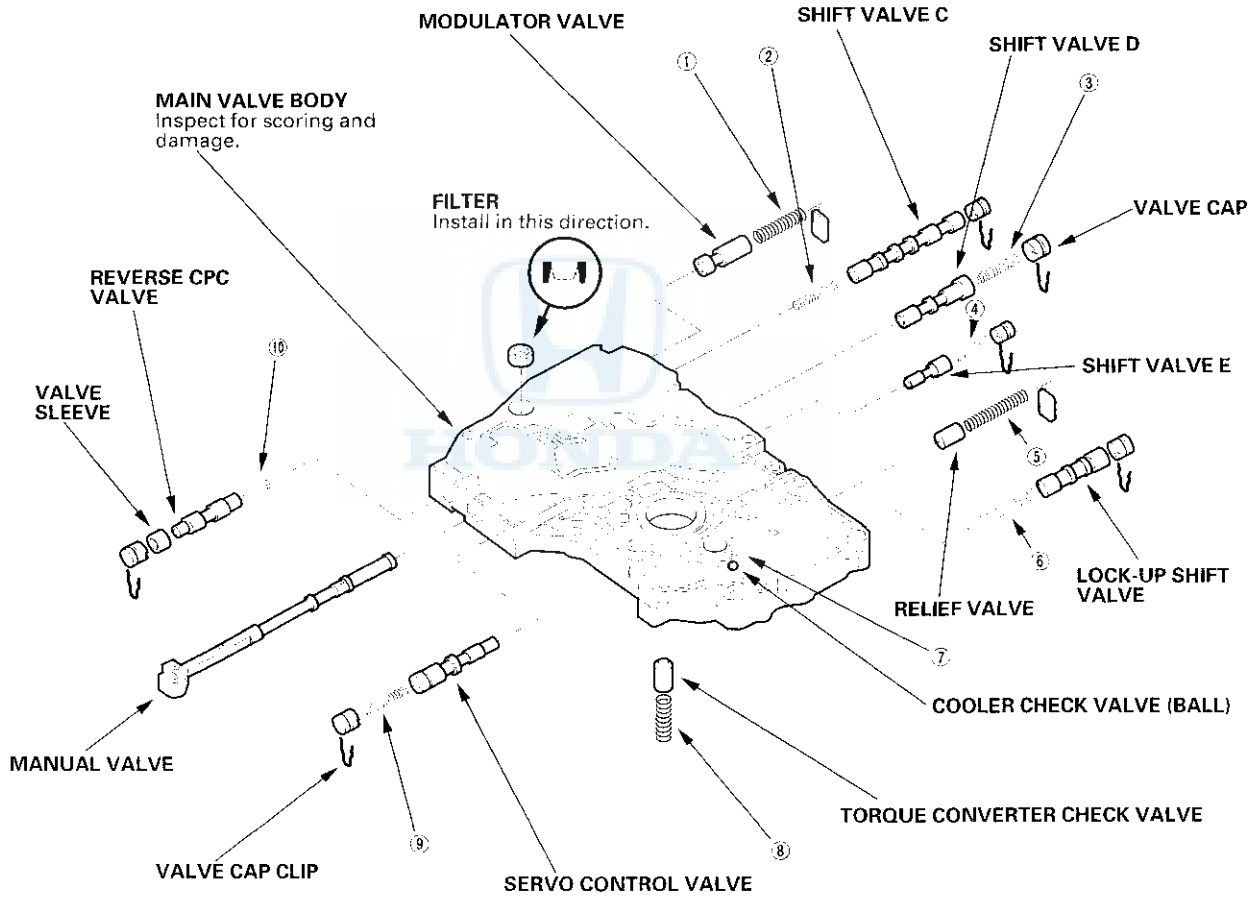

(cont'd)

Main Valve Body Disassembly, Inspection, and Reassembly (cont'd)

Sectional View

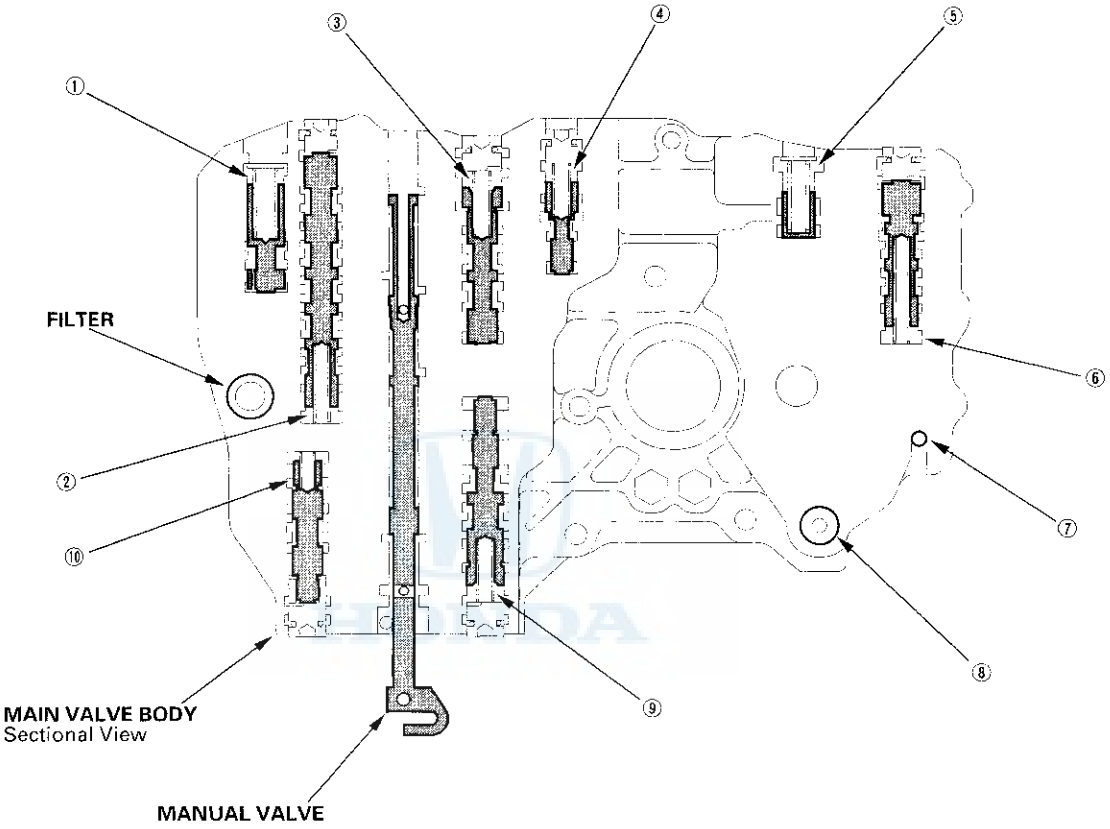

SPRING SPECIFICATIONS

No.	Spring	Standard (New)-Unit: mm (in.)			
		Wire Dia.	O.D.	Free Length	No. of Coils
①	Modulator valve spring	1.6 (0.063)	10.4 (0.409)	33.5 (1.319)	9.8
②	Shift valve C spring	0.8 (0.031)	6.6 (0.260)	49.1 (1.933)	21.7
③	Shift valve D spring	0.7 (0.028)	6.6 (0.260)	35.7 (1.406)	17.2
④	Shift valve E spring	0.7 (0.028)	6.6 (0.260)	32.2 (1.268)	13.4
⑤	Relief valve spring	1.1 (0.043)	8.6 (0.339)	30.1 (1.185)	10.7
⑥	Lock-up shift valve spring	0.9 (0.035)	7.6 (0.299)	63.0 (2.480)	22.4
⑦	Cooler check valve spring	0.6 (0.024)	5.8 (0.228)	14.5 (0.571)	6.8
⑧	Torque converter check valve	1.2 (0.047)	8.6 (0.339)	35.1 (1.382)	14.3
⑨	Servo control valve spring	0.7 (0.028)	6.6 (0.260)	35.7 (1.406)	17.2
⑩	Reverse CPC valve spring	0.7 (0.028)	6.1 (0.240)	17.8 (0.701)	7.9

ATF Pump Inspection

1. Install the ATF pump drive gear (A), driven gear (B) and ATF pump driven gear shaft (C) in the main valve body (D). Lubricate all parts with ATF, and install the ATF pump driven gear with its grooved and chamfered side facing up.

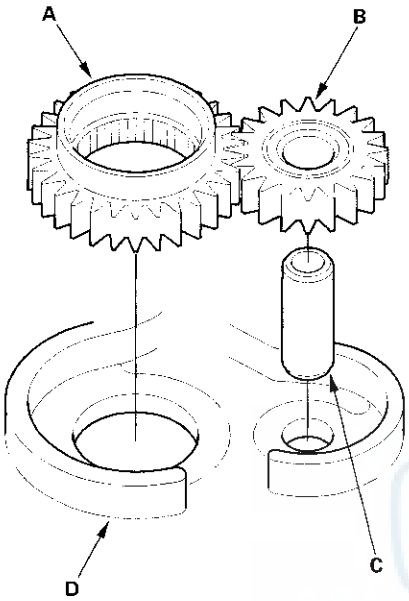

2. Measure the side clearance of the ATF pump drive gear (A) and driven gear (B).

   ATF Pump Gears Side (Radial) Clearance:
   Standard (New):
   ATF Pump Drive Gear
   0.210 – 0.265 mm (0.0083 – 0.00104 in.)
   ATF Pump Driven Gear
   0.035 – 0.063 mm (0.0014 – 0.0025 in.)

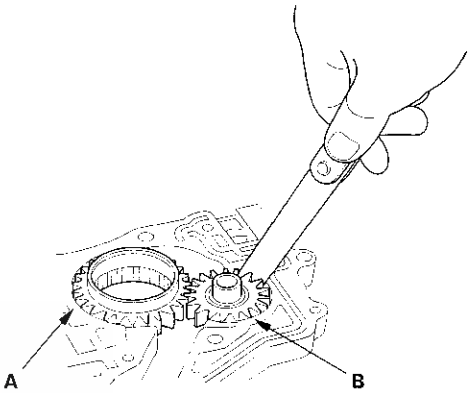

3. Remove the ATF pump driven gear shaft. Measure the thrust clearance between the ATF pump driven gear (A) and the valve body (B) with a straight edge (C) and a feeler gauge (D).

   ATF Pump Drive/Driven Gear Thrust (Axial) Clearance:
   Standard (New): 0.03 – 0.05 mm (0.001 – 0.002 in.)
   Service Limit: 0.07 mm (0.003 in.)

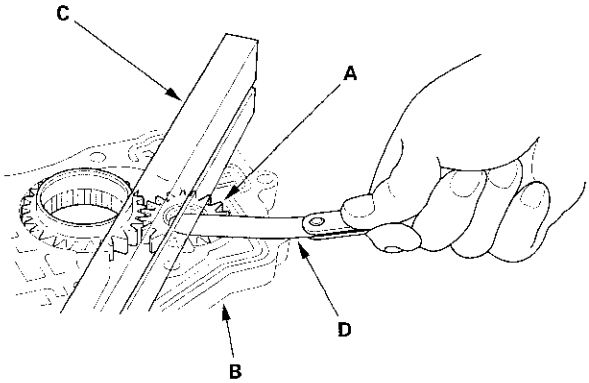

Regulator Valve Body Disassembly, Inspection, and Reassembly

1. Clean all parts thoroughly in solvent or carburetor cleaner, and dry them with compressed air. Blow out all passages.
2. Check all valves for free movement, If any fail to slide freely, refer to Valve Body Repair (see page 14-159).
3. Replace the valve body as an assembly if any parts are worn or damaged.
4. Hold the regulator spring cap in place while removing the stop bolt. The regulator spring cap is spring loaded. Once the stop bolt is removed, release the spring cap slowly so it does not pop out.
5. Reassembly is the reverse of the disassembly. Install the filter in the direction shown.
6. Coat all parts with ATF during reassembly.
7. Align the hole in the regulator spring cap with the hole in the valve body, then press the spring cap into the valve body, and tighten the stop bolt.

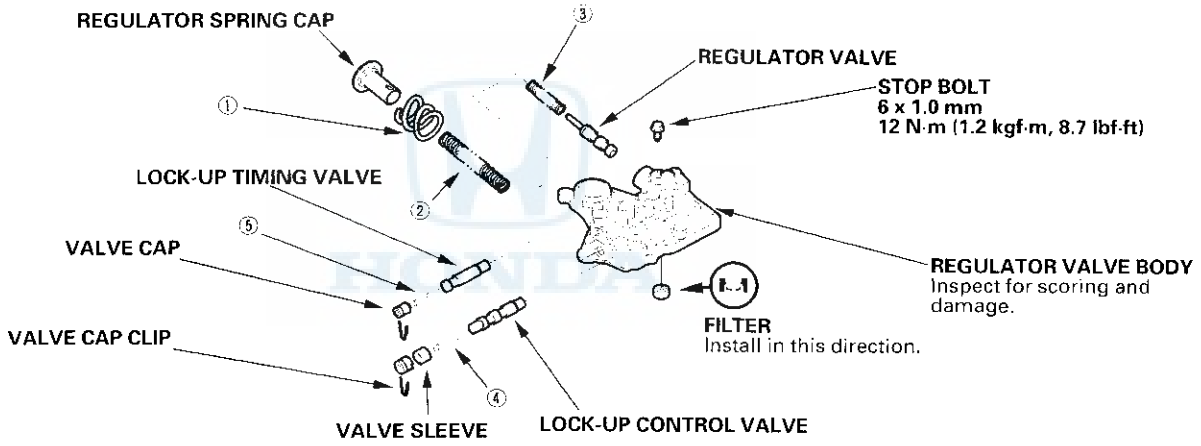

SPRING SPECIFICATIONS

No.	Spring	Standard (New)-Unit: mm (in.)			
		Wire Dia.	O.D.	Free Length	No. of Coils
①	Stator reaction spring	5.5 (0.217)	37.4 (1.472)	30.3 (1.193)	2.12
②	Regulator valve spring A	1.8 (0.071)	14.7 (0.579)	87.5 (3.445)	16.5
③	Regulator valve spring B	1.7 (0.067)	9.4 (0.370)	44.0 (1.732)	13.4
④	Lock-up control valve spring	0.7 (0.028)	6.6 (0.260)	42.9 (1.689)	14.2
⑤	Lock-up timing valve spring	0.65 (0.026)	6.6 (0.260)	34.8 (1.370)	15.6

Servo Body Disassembly, Inspection, and Reassembly

1. Clean all parts thoroughly in solvent or carburetor cleaner, and dry them with compressed air. Blow out all passages.
2. Check all valves for free movement. If any fail to slide freely, refer to Valve Body Repair (see page 14-159).
3. Replace the valve body as an assembly if any parts worn or damaged.
4. Coat all parts with ATF during reassembly.

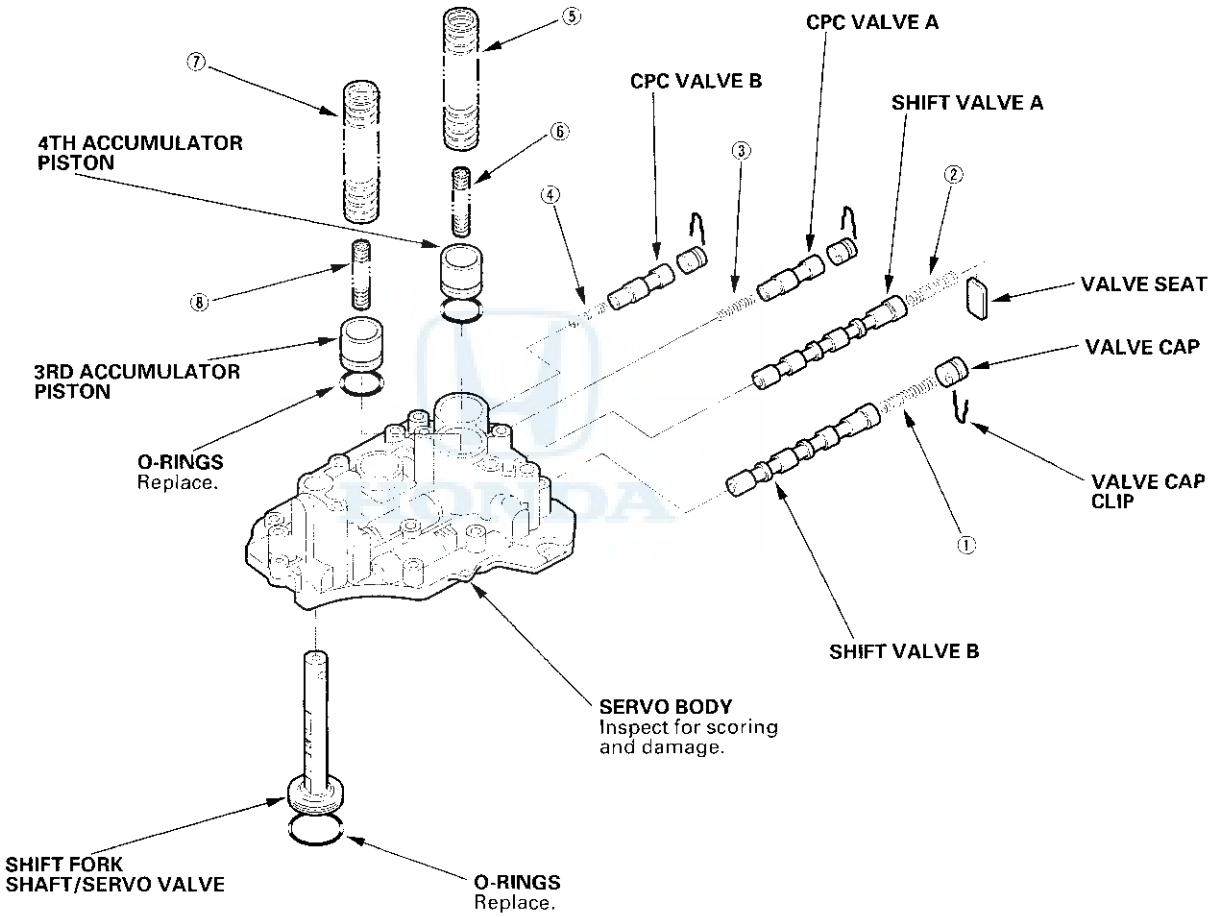

SPRING SPECIFICATIONS

No.	Spring	Standard (New)-Unit: mm (in.)			
		Wire Dia.	O.D.	Free Length	No. of Coils
①	Shift valve B spring	0.8 (0.031)	7.1 (0.280)	40.4 (1.591)	16.9
②	Shift valve A spring	0.8 (0.031)	7.1 (0.280)	40.4 (1.591)	16.9
③	CPC valve A spring	0.7 (0.028)	6.1 (0.240)	17.8 (0.701)	7.9
④	CPC valve B spring	0.7 (0.028)	6.1 (0.240)	17.8 (0.701)	7.9
⑤	4th accumulator spring A	2.6 (0.102)	19.6 (0.772)	66.4 (2.614)	9.7
⑥	4th accumulator spring B	2.4 (0.094)	12.8 (0.504)	51.5 (2.028)	11.5
⑦	3rd accumulator spring A	2.6 (0.102)	19.6 (0.772)	66.4 (2.614)	9.7
⑧	3rd accumulator spring B	2.4 (0.094)	12.8 (0.504)	51.5 (2.028)	11.5

Accumulator Body Disassembly, Inspection, and Reassembly

1. Do not use a magnet to remove the check balls: it may magnetize the balls.
2. Clean all parts thoroughly in solvent or carburetor cleaner, and dry them with compressed air. Blow out all passages.
3. Coat all parts with ATF during reassembly.

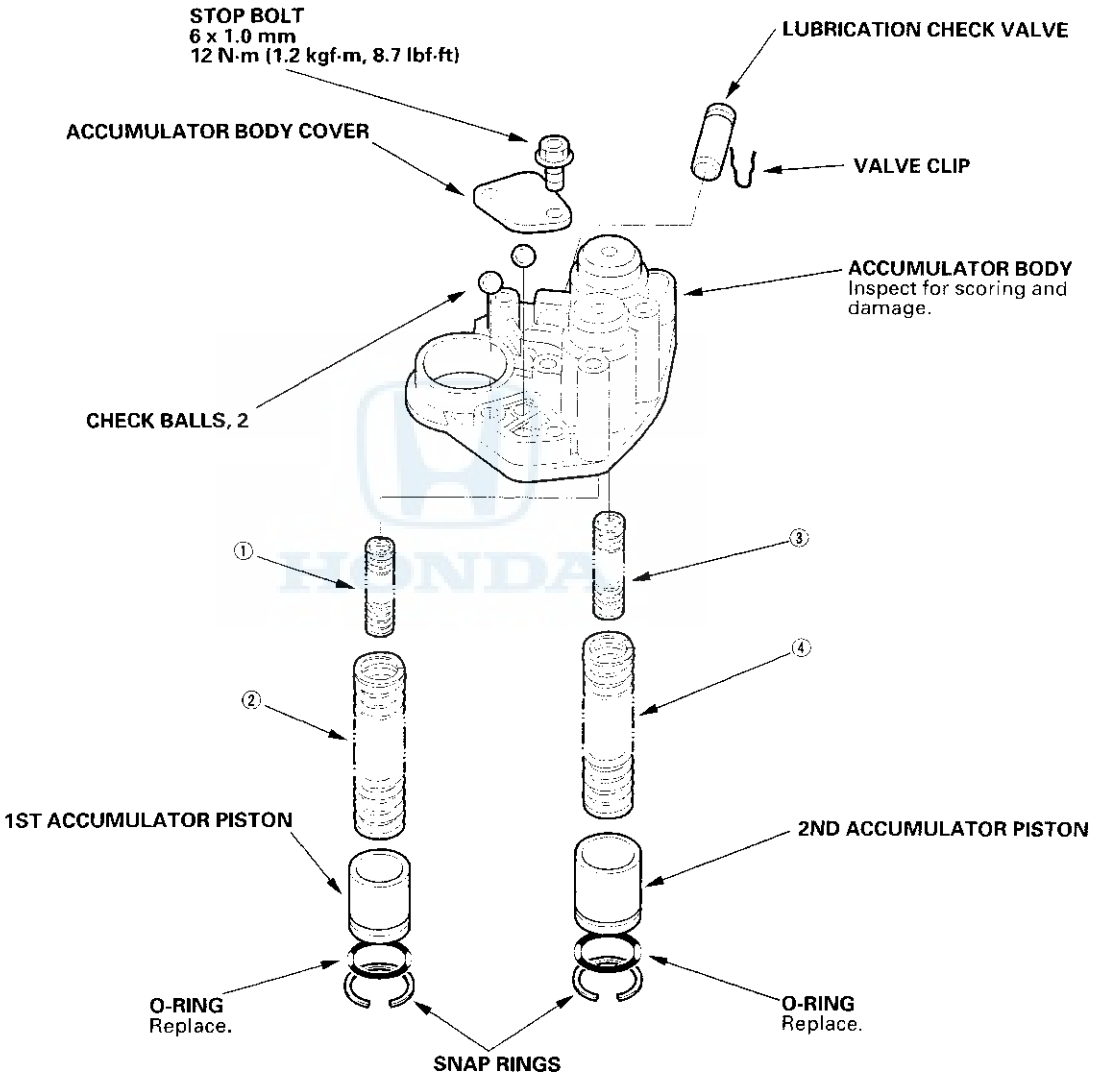

SPRING SPECIFICATIONS

No.	Springs	Standard (New)-Unit: mm (in.)			
		Wire Dia.	O.D.	Free Length	No. of Coils
①	1st accumulator spring B	2.7 (0.106)	15.0 (0.591)	52.5 (2.067)	10.3
②	1st accumulator spring A	2.5 (0.098)	21.6 (0.850)	87.5 (3.445)	11.8
③	2nd accumulator spring B	2.4 (0.094)	12.6 (0.496)	53.5 (2.106)	12.9
④	2nd accumulator spring A	2.7 (0.106)	19.6 (0.772)	66.3 (2.610)	9.9

Mainshaft Bearing and Oil Seal Replacement

Special Tools Required
- Adjustable bearing puller, 25 – 40 mm 07736-A01000B or 07736-A01000A
- Driver 07749-0010000
- Attachment, 62 x 68 mm 07746-0010500
- Attachment, 72 x 75 mm 07746-0010600

1. Remove the mainshaft bearing and oil seal with the special tool and a commercially available 3/8"-16 slide hammer (A).

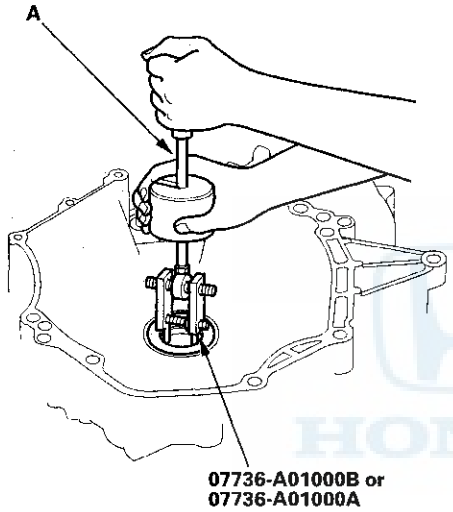

2. Install the new mainshaft bearing until it bottoms in the housing with the special tools.

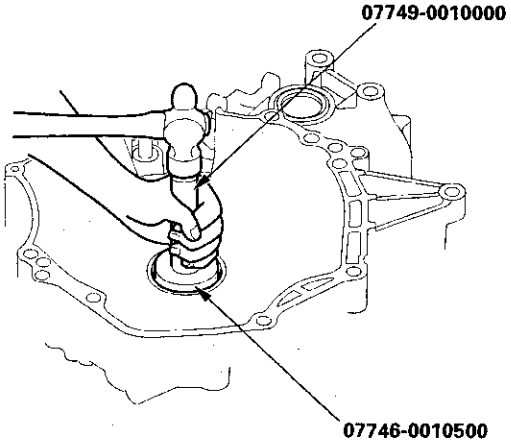

3. Install the new oil seal flush with the housing with the special tools.

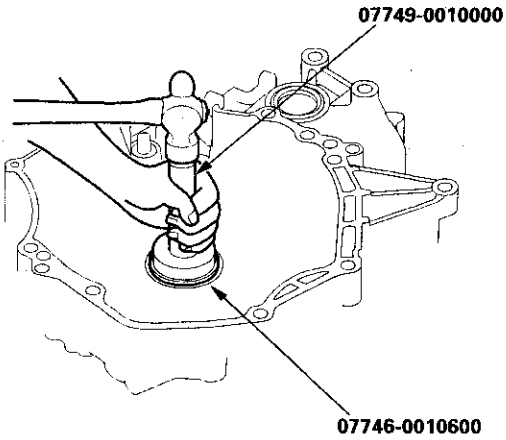

Countershaft Bearing Replacement

Special Tools Required
- Adjustable bearing puller, 25—40 mm 07736-A01000B or 07736-A01000A
- Driver 07749-0010000
- Attachment, 62 x 68 mm 07746-0010500

1. Remove the countershaft bearing (A) with the special tool and a commercially available 3/8"-16 slide hammer (B).

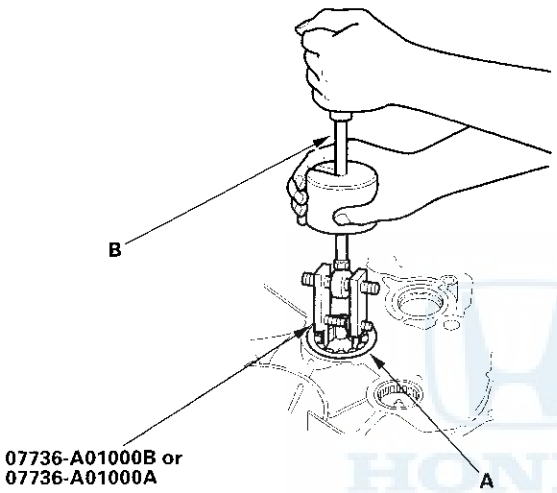

2. Install the ATF guide plate (A).

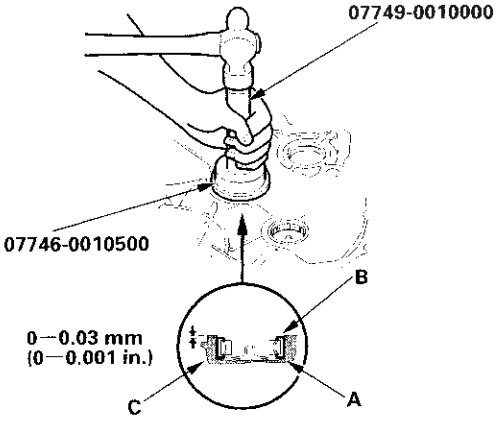

3. Install the new bearing (B) into the housing (C) with the special tools.

Secondary Shaft Bearing Replacement

Special Tools Required
- Adjustable bearing puller, 25—40 mm 07736-A01000B or 07736-A01000A
- Driver 07749-0010000
- Driver attachment 07947-6340500

1. Remove the secondary shaft bearing (A) with the special tool and a commercially available 3/8"-16 slide hammer (B).

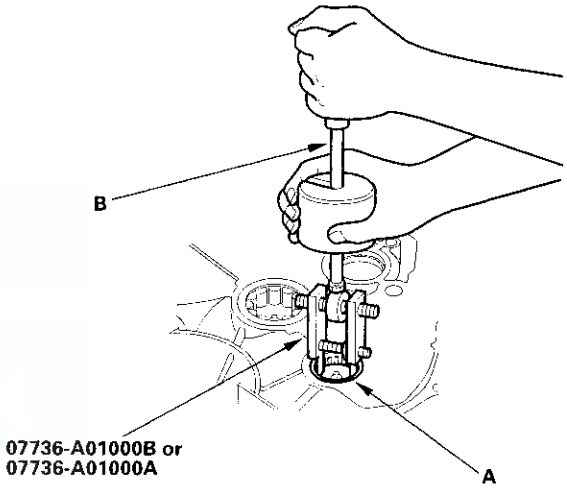

2. Install the ATF guide plate (A).

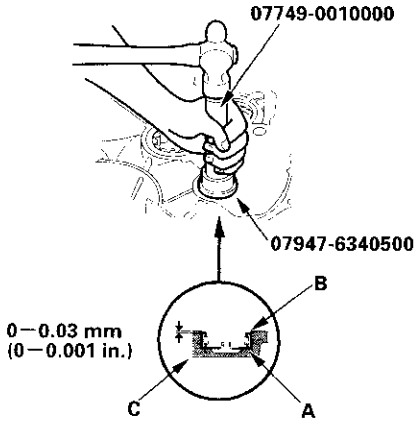

3. Install the new bearing (B) into the housing (C) with the special tools.

Mainshaft Disassembly, Inspection, and Reassembly

1. Lubricate all parts with ATF during reassembly.

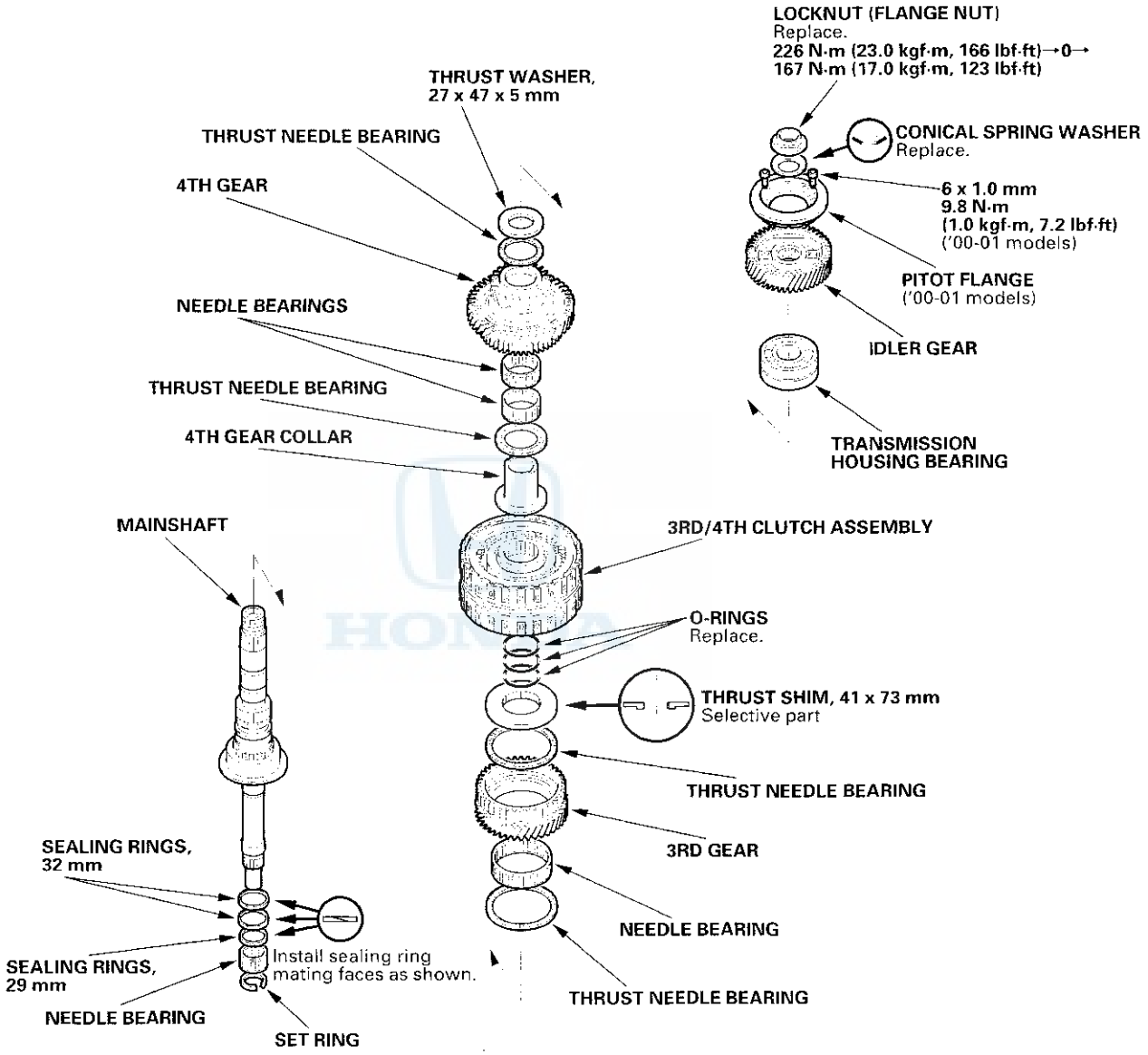

2. Check the clearance of the 3rd/4th clutch assembly (see page 14-170).
3. Inspect the thrust needle bearing and the needle bearing for galling and rough movement.
4. Inspect the splines for excessive wear and damage.
5. Check shaft bearing surfaces for scoring, scratches, and excessive wear.
6. Before installing the O-rings, wrap the shaft splines with tape to prevent damage to the O-rings.
7. Install the conical spring washer and 41 x 73 mm thrust shim in the direction shown.
8. Inspect condition of the sealing rings. If the sealing rings are worn, distorted, or damaged, replace them (see page 14-171).

3rd/4th Clutch Clearance Inspection

1. Remove the O-rings from the mainshaft.

2. Assemble the 41 x 73 mm thrust shim (A), 3rd/4th clutch assembly (B), and 4th gear collar (C) on the mainshaft (D).

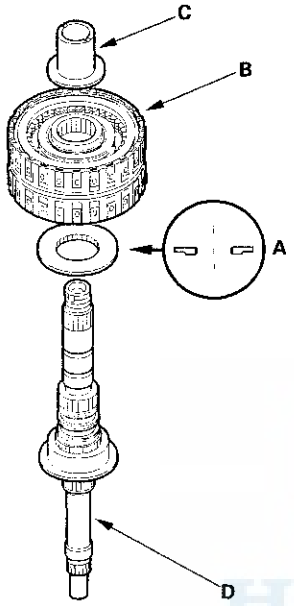

3. Hold the 4th gear collar (C) against the clutch assembly (B), then measure the clearance between the clutch guide (E) and the 4th gear collar with a feeler gauge (F) in at least three places. Use the average as the actual clearance.

STANDARD: 0.03–0.11 mm (0.001–0.004 in.)

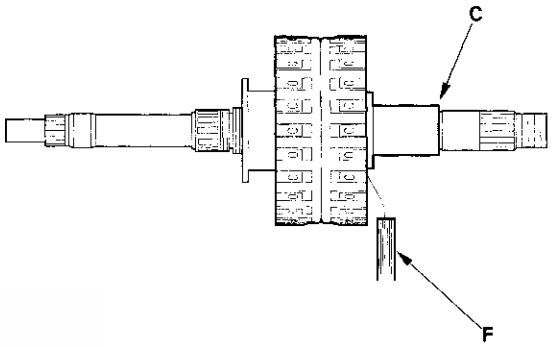

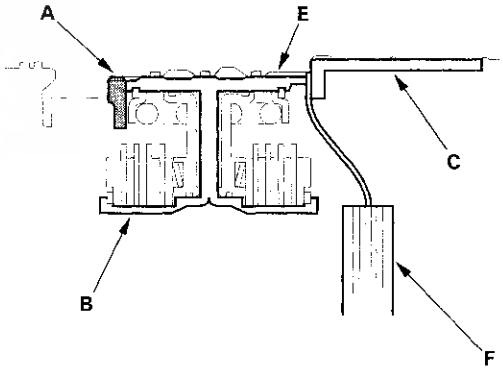

4. If the clearance is out of standard, remove the thrust shim and measure its thickness.

5. Select and install a new shim, then recheck.

THRUST SHIM, 41 x 73 mm

No.	Part Number	Thickness
1	90414-P7X-000	7.85 mm (0.309 in.)
2	90415-P7X-000	7.90 mm (0.311 in.)
3	90416-P7X-000	7.95 mm (0.313 in.)
4	90417-P7X-000	8.00 mm (0.315 in.)
5	90418-P7X-000	8.05 mm (0.317 in.)
6	90419-P7X-000	8.10 mm (0.319 in.)

6. After replacing the thrust shim, make sure the clearance is within standard.

Mainshaft Sealing Rings Replacement

The sealing rings are synthetic resin with chamfered ends. Check condition of the sealing rings, and replace them only if they are worn, distorted, or damaged.

1. For a better fit, squeeze the sealing rings (A) together slightly before installing them.

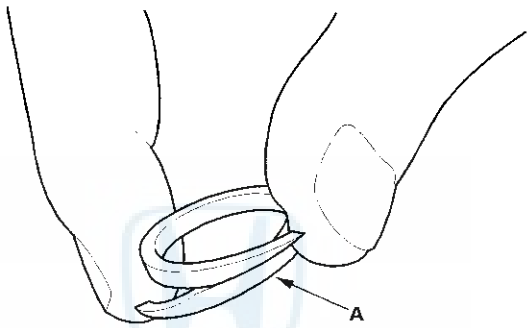

2. Apply ATF to the new sealing rings then install them on the mainshaft.

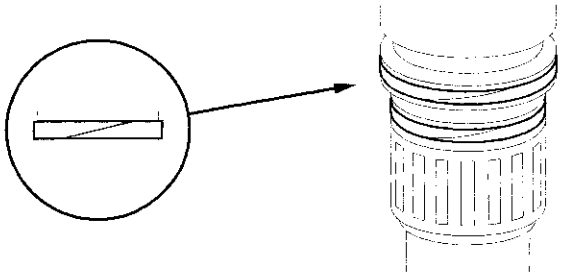

3. After installing the sealing rings, verify the following:

   - The rings are fully seated in the groove.
   - The rings are not twisted.
   - The chamfered ends of the rings are properly joined.

Countershaft Disassembly, Inspection, and Reassembly

1. Remove the locknut, and take off components down to the reverse selector hub.

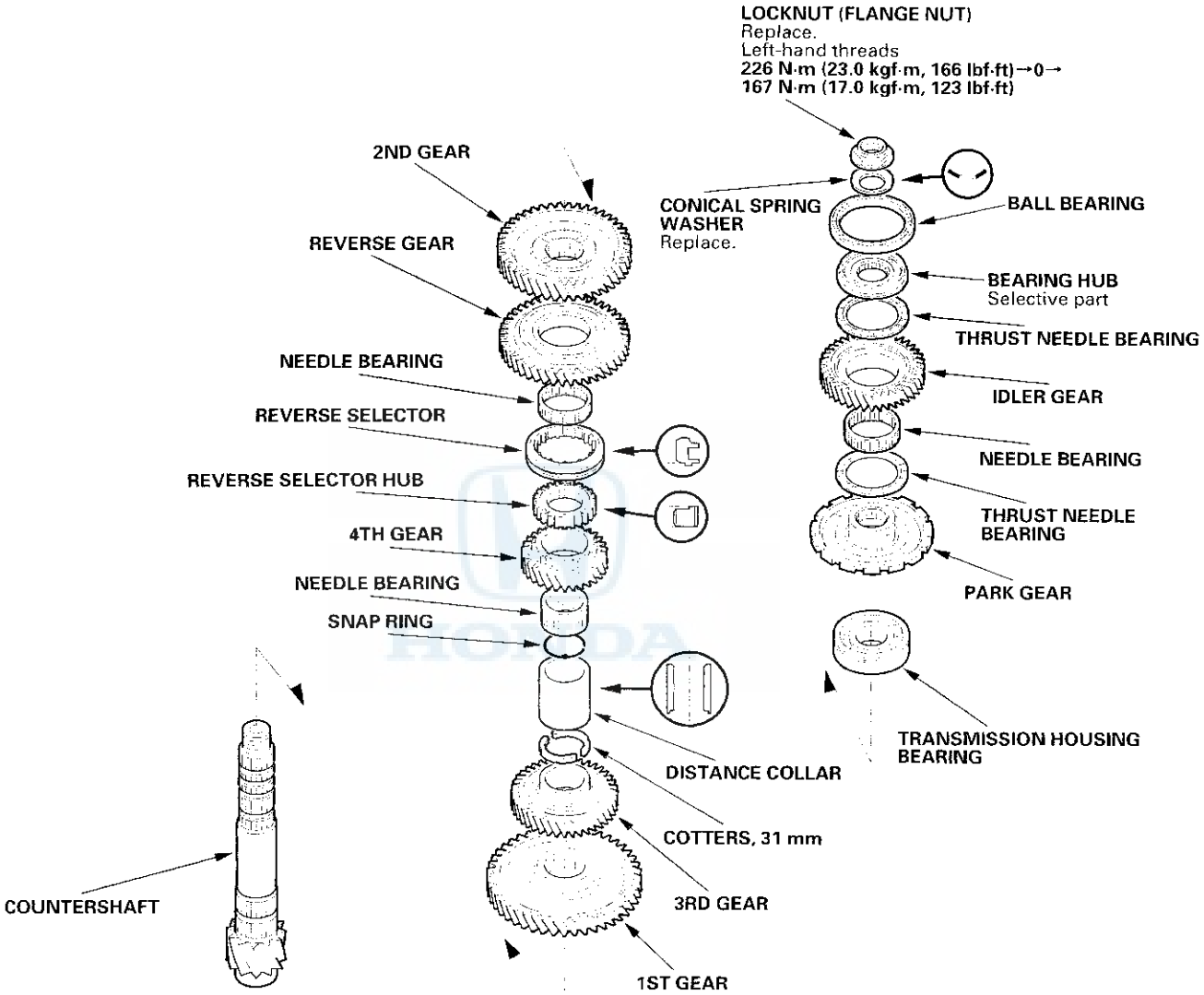

2. Remove the reverse selector hub, 3rd gear, and 1st gear (see page 14-173).

3. Check the bearing in the bearing hub for wear and rough movement. If the bearing is worn or damaged, replace it (see page 14-175).

4. Inspect the thrust needle bearing and the needle bearing for galling and rough movement.

5. Check the splines for excessive wear and damage.

6. Check the shaft bearing surfaces for scoring, scratches, and excessive wear.

7. Lubricate all parts with ATF, and reassemble the shafts and gears.

8. Install the conical spring washer, reverse selector, reverse selector hub, and distance collar in the direction shown.

Countershaft Reverse Selector Hub, 3rd Gear, and 1st Gear Replacement

Special Tools Required
Driver 40 mm I.D. 07746-0030100

Removal

1. Remove the reverse selector hub (A) and the 4th gear (B) with a universal two-jaw (or three-jaw) puller (C). Place a shaft protector (D) between the puller and countershaft (E) to prevent damaging the countershaft.

   NOTE: Some of the reverse selector hubs are not press-fitted, and can be removed without using a puller.

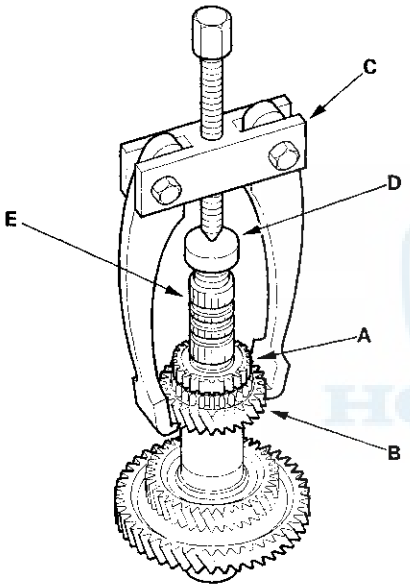

2. Remove the needle bearing, snap ring, distance collar, and 31 mm cotters from the countershaft.

3. Remove the 1st gear (A) and 3rd gear (B) together from the countershaft (C) with a puller (D). Place a shaft protector (E) between the puller and countershaft to prevent damaging the countershaft.

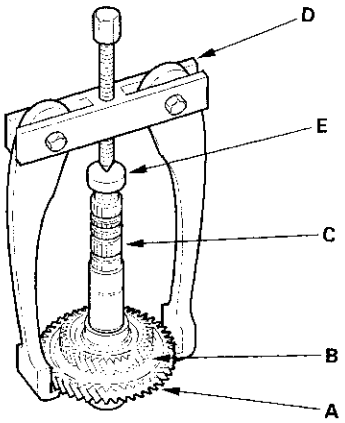

(cont'd)

Countershaft Reverse Selector Hub, 3rd Gear, and 1st Gear Replacement (cont'd)

Installation

1. Apply ATF to the parts.

2. Install the 1st gear on the countershaft by hand.

3. Align the shaft splines with those on 3rd gear, then press the countershaft (A) into the 3rd gear with press.

   - Place an attachment (B) between the press and countershaft to prevent damaging the countershaft.
   - Stop pressing the countershaft when the 3rd gear contacts the 1st gear (C).

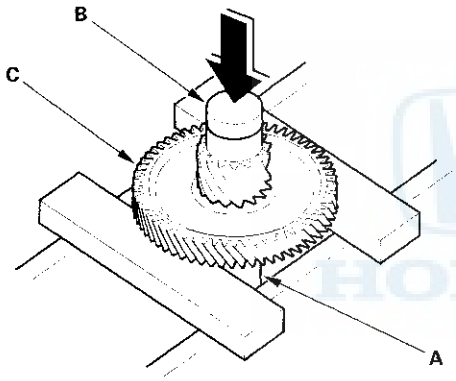

4. Install the 31 mm cotters, distance collar, snap ring, needle bearing, and 4th gear (A) on the countershaft.

5. Slide the reverse selector hub (B) over the countershaft (C), and then press it into place with the special tool and a press.

   NOTE: Some of the reverse selector hubs are not press-fitted and can be installed without using the special tool and a press.

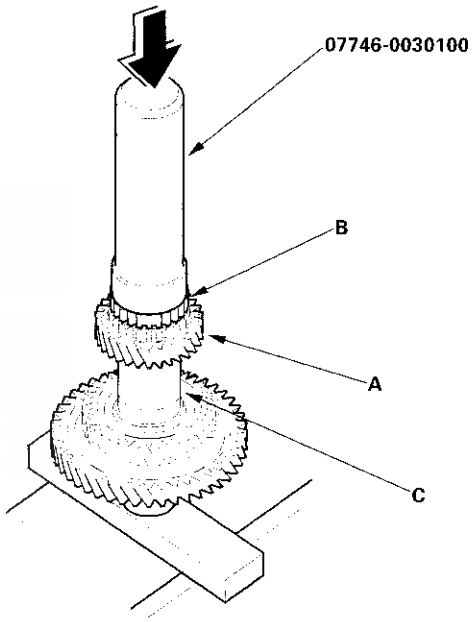

Countershaft Bearing Hub/Bearing Replacement

Special Tools Required
- Driver 07749-0010000
- Attachment, 42 x 47 mm 07746-0010300
- Attachment, 62 x 68 mm 07746-0010500

1. Check the bearing for wear, damage, and rough movement. If the bearing is worn or damaged, replace it.

2. Remove the bearing (A) from the bearing hub with the special tools, a bearing separator (B), and a press.

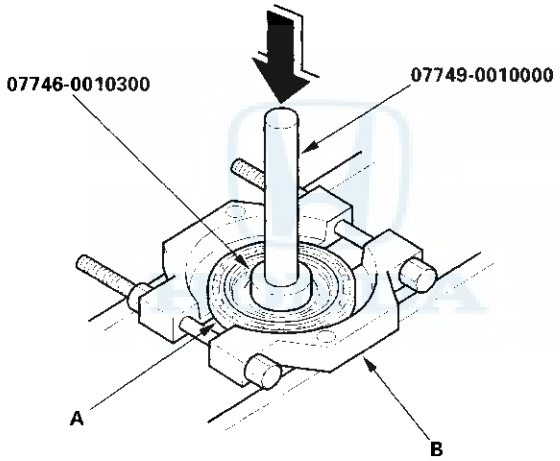

3. Install the new bearing on the bearing hub with the special tools and a press.

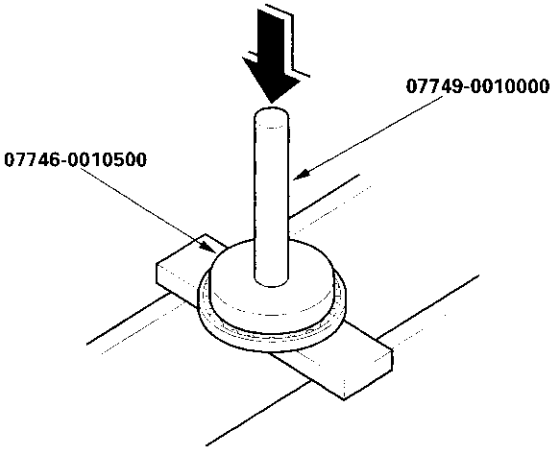

Secondary Shaft Disassembly, Inspection, and Reassembly

1. Remove the locknut, and disassemble the shaft and gears.

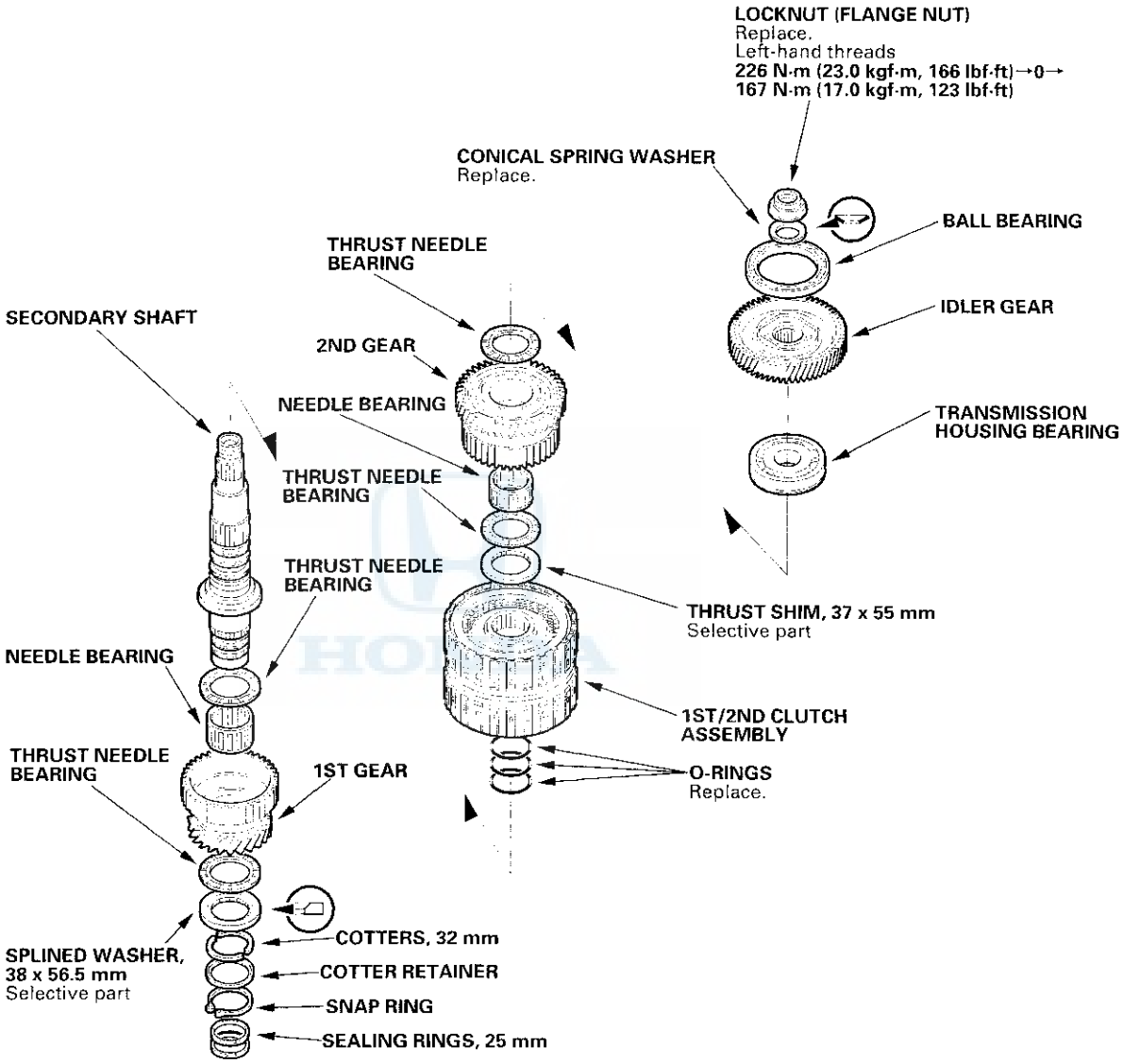

2. Inspect the thrust needle bearing and the needle bearing for galling and rough movement.
3. Check clearance of the secondary shaft assembly (see page 14-177).
4. Check the splines for excessive wear and damage.
5. Check the shaft bearing surfaces for scoring, scratches, and excessive wear.
6. Check the idler gear bearing for wear and rough movement. If the bearing is worn or damaged, replace it (see page 14-179).
7. Before installing the O-rings, wrap the shaft splines with tape to prevent damage to the O-rings.
8. Lubricate all parts with ATF during reassembly.
9. Install the conical spring washer and 38 x 56.5 mm splined washer in the direction shown.

Secondary Shaft Clearance Inspection

1. Remove the O-rings from the shaft.

2. Assemble the thrust needle bearing (A), needle bearing (B), 1st gear (C), thrust needle bearing (D), 38 x 56.5 mm splined washer (E), 32 mm cotters (F), cotter retainer (G), and snap ring (H) on the secondary shaft (I).

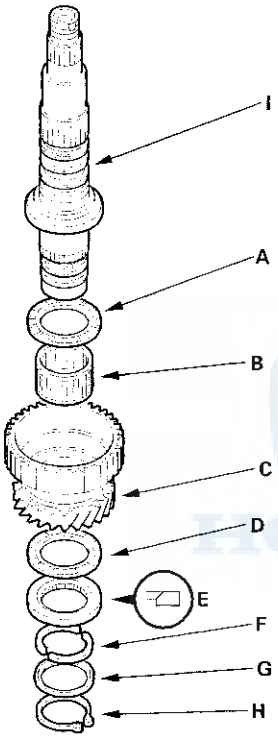

3. Measure the clearance between the 38 x 56.5 mm splined washer (E) and cotters (F) with a feeler gauge (J) in at least three places. Use the average as the actual clearance.

STANDARD: 0.07 – 0.15 mm (0.003 0.006 in.)

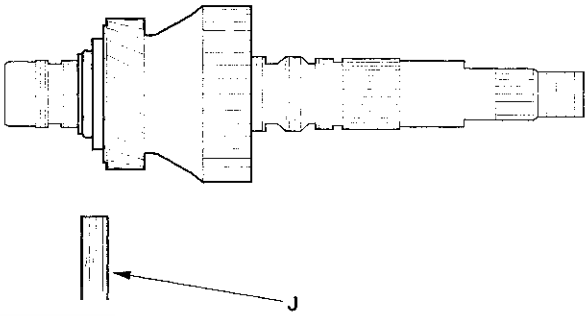

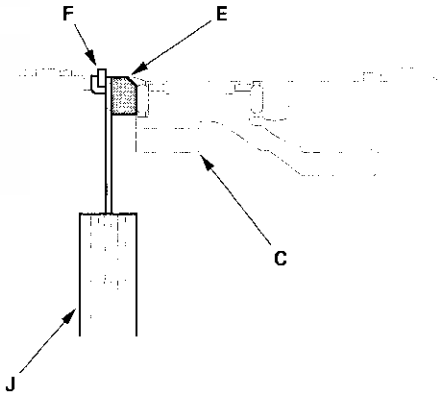

4. If the clearance is out of standard, remove the splined washer, and measure its thickness.

5. Select and install a new splined washer, then recheck.

SPLINED WASHER, 38 x 56.5 mm

No.	Part Number	Thickness
1	90502-P0Z-000	6.85 mm (0.270 in.)
2	90503-P0Z-000	6.90 mm (0.272 in.)
3	90504-P0Z-000	6.95 mm (0.274 in.)
4	90505-P0Z-000	7.00 mm (0.276 in.)
5	90506-P0Z-000	7.05 mm (0.278 in.)
6	90507-P0Z-000	7.10 mm (0.280 in.)

(cont'd)

Secondary Shaft Clearance Inspection (cont'd)

6. Remove the 27 x 47 x 5 mm thrust washer from the mainshaft.

7. Assemble the 1st/2nd clutch assembly (A), 37 x 55 mm thrust shim (B), thrust needle bearing (C), needle bearing (D), 2nd gear (E), thrust needle bearing (F), and 27 x 47 x 5 mm thrust washer (removed from mainshaft) (G) on the secondary shaft (H).

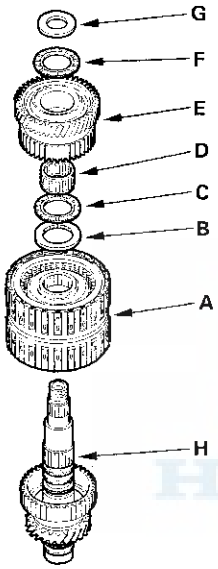

8. Set the dial indicator (I) on 2nd gear (E).

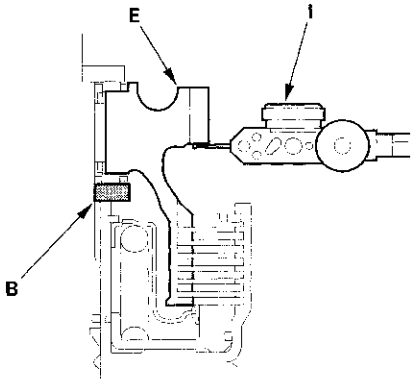

9. Hold the 27 x 47 x 5 mm thrust washer (G) against the clutch assembly (A), and measure the 2nd gear axial clearance in at least three places while moving the 2nd gear (E). Use the average as the actual clearance.

STANDARD: 0.04 - 0.12 mm (0.002 – 0.005 in.)

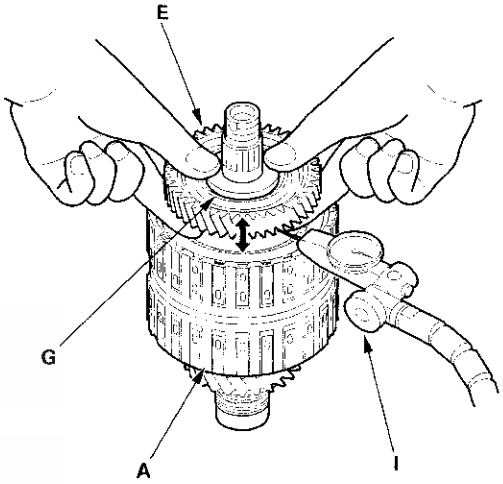

10. If the clearance is out of standard, remove the 37 x 55 mm thrust shim and measure its thickness.

11. Select and install a new thrust shim, then recheck.

THRUST SHIM, 37 x 55 mm

No.	Part Number	Thickness
1	90406-P0Z-000	4.90 mm (0.193 in.)
2	90407-P0Z-000	4.95 mm (0.195 in.)
3	90408-P0Z-000	5.00 mm (0.197 in.)
4	90409-P0Z-000	5.05 mm (0.199 in.)
5	90410-P0Z-000	5.10 mm (0.201 in.)
6	90411-P0Z-000	5.15 mm (0.203 in.)
7	90412-P0Z-000	5.20 mm (0.205 in.)

12. Disassemble the shaft and gears.

13. Reinstall the 27 x 47 x 5 mm thrust washer on the mainshaft.

Secondary Shaft Idler Gear Bearing Replacement

Special Tools Required
- Driver 07749-0010000
- Attachment, 62 x 68 mm 07746-0010500

1. Check the bearing for wear, damage, and rough movement. If the bearing is worn or damaged, go to step 2.

2. Place the secondary shaft idler gear in a vise with soft jaws.

3. Remove the bearing (A) from the secondary shaft idler gear (B) with a commercially available 3-jaw slide hammer (C).

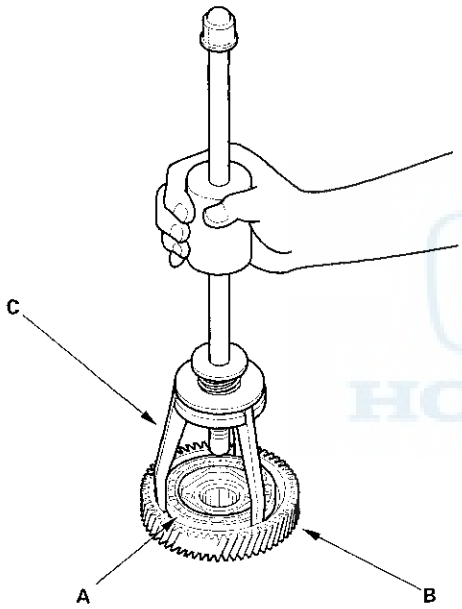

4. Install the bearing on the secondary shaft idler gear with the special tool and a press.

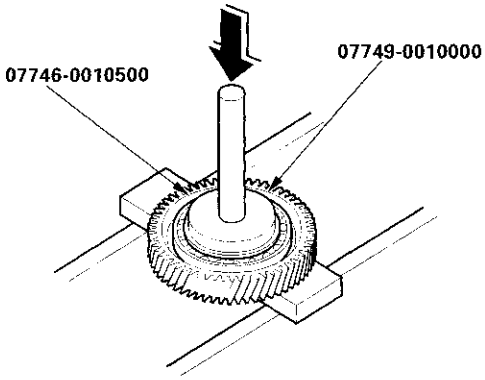

Clutch Disassembly

Special Tools Required
- Clutch spring compressor attachment 07LAE-PX40100
- Clutch spring compressor attachment 07HAE-PL50101
- Clutch spring compressor bolt assembly 07GAE-PG40200 or 07GAE-PG4020A

1. Remove the snap ring (A), then remove the clutch end plate, the clutch discs, and the plates with a screwdriver (B).

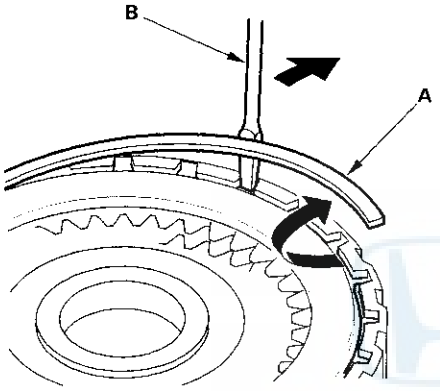

2. Remove the disc spring (A) from the 1st, 3rd and 4th clutches.

   NOTE: The 2nd clutch does not have a disc spring.

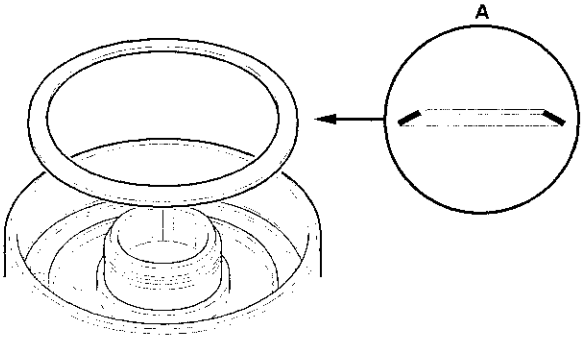

3. Install the special tools on the 3rd/4th clutch assembly.

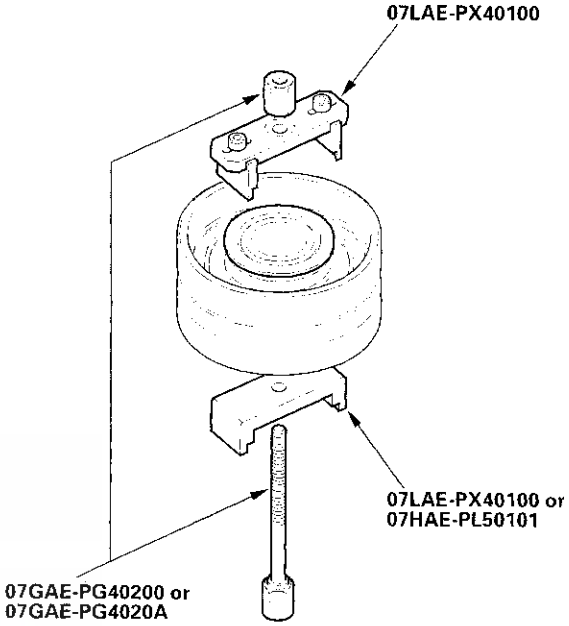

4. Be sure the special tool (A) is adjusted to have full contact with the spring retainer (B) on the 3rd and 4th clutches.

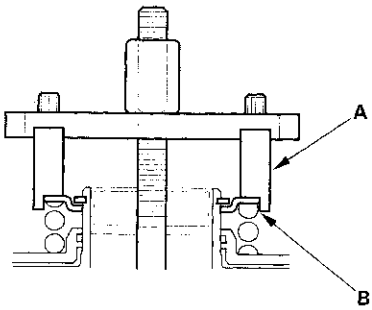

5. Set the special tool (A) on the spring retainer (B) of the 1st and 2nd clutches in such a way that the special tool works on the clutch return spring (C).

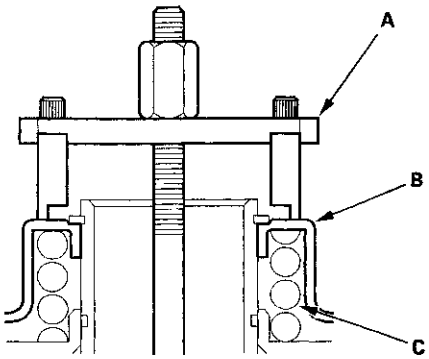

6. If either end of the special tool is set over an area of the spring retainer which is unsupported by the return spring, the retainer may be damaged.

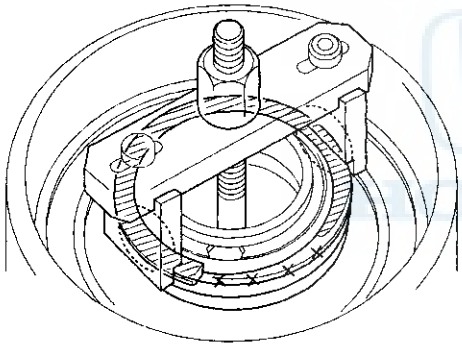

7. Compress the spring until the snap ring can be removed.

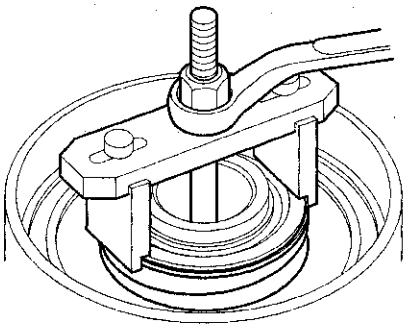

8. Remove the snap ring (A). Then remove the special tools (B), spring retainer (C), return spring.

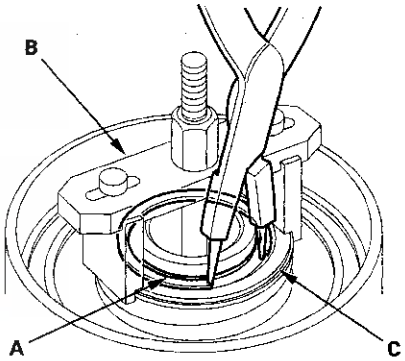

(cont'd)

Clutch Disassembly (cont'd)

9. For 3rd and 4th clutch: Wrap a shop rag around the clutch drum (A), and apply air pressure to the fluid passage to remove the piston (B). Place a finger tip on the other end while applying air pressure.

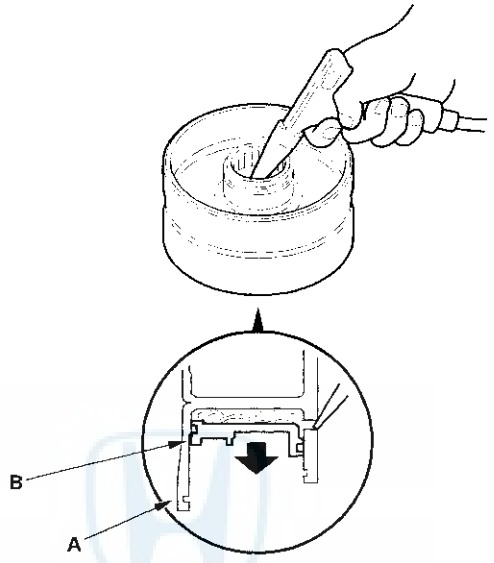

Clutch Inspection

1ST/2ND CLUTCH

NOTE: There are two types of spring retainer, you may find either type in the clutch assembly. Some spring retainers have seal lips, and do not have O-rings. The seal lip is undetachable from the spring retainer.

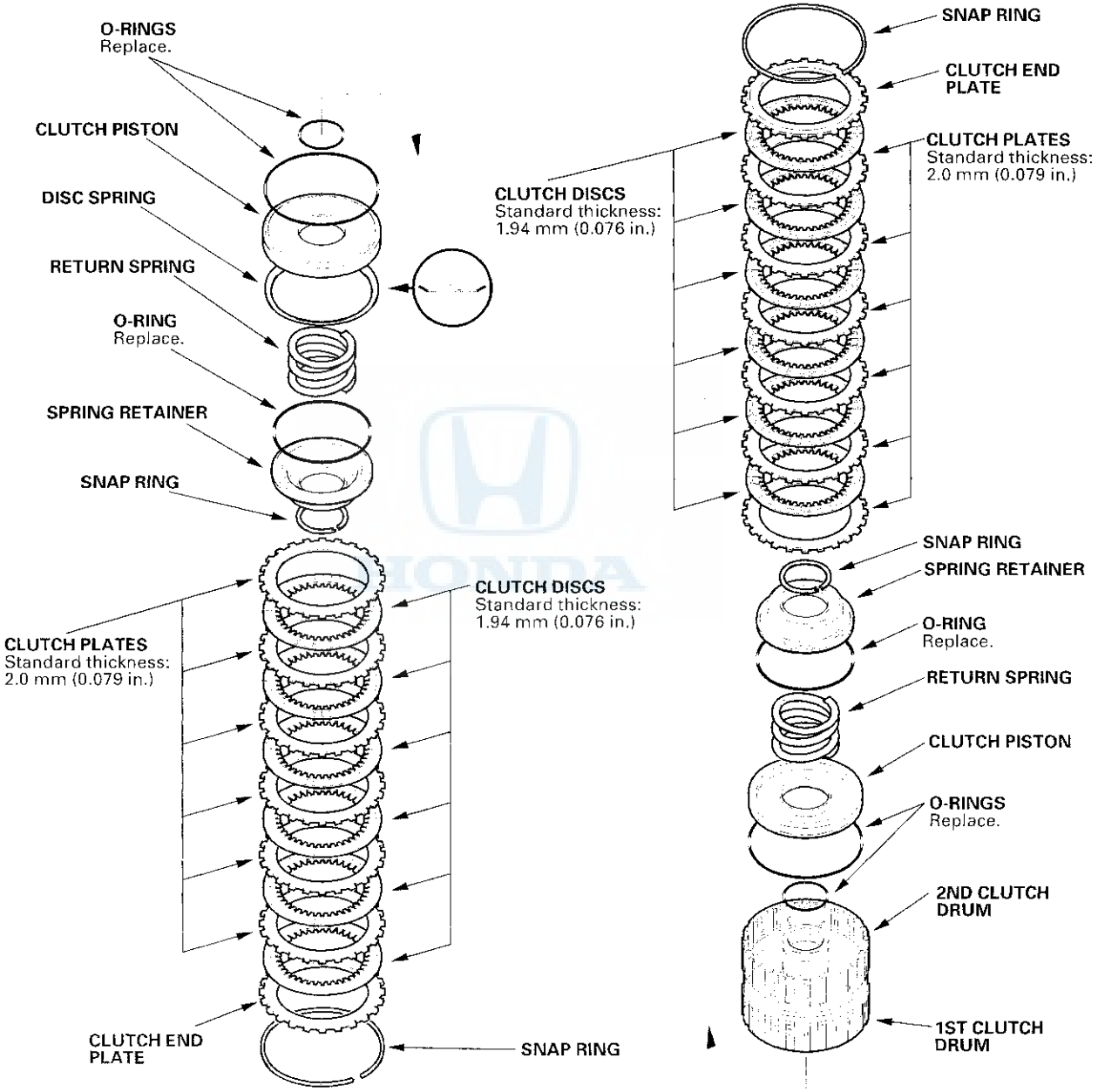

(cont'd)

Clutch Inspection (cont'd)

3RD/4TH CLUTCH

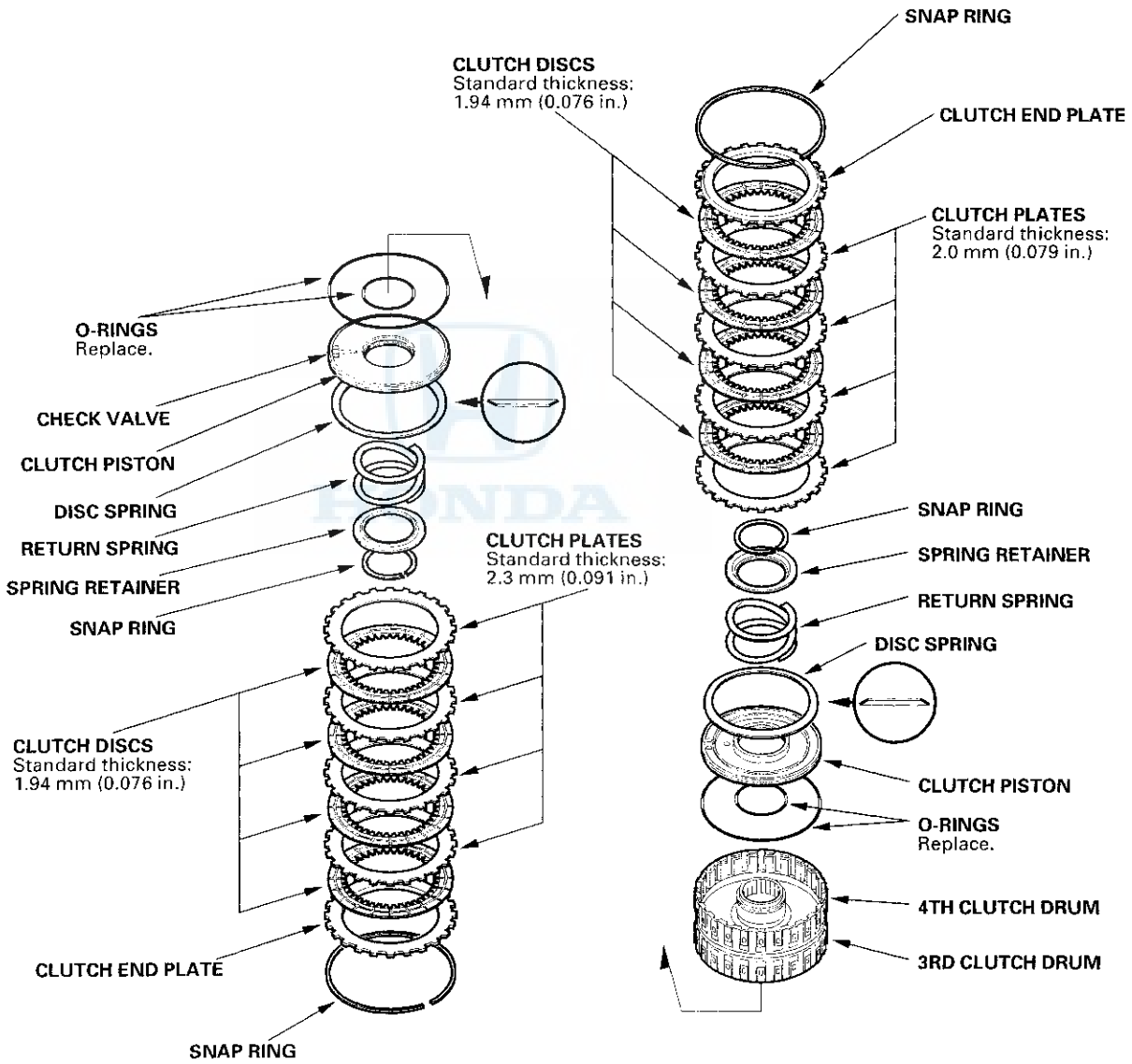

Clutch Reassembly

Special Tools Required
- Clutch spring compressor attachment 07LAE-PX40100
- Clutch spring compressor attachment 07HAE-PL50101
- Clutch spring compressor bolt assembly 07GAE-PG40200 or 07GAE-PG4020A

Note these items during reassembly:

- Clean all parts thoroughly in solvent or carburetor cleaner, and dry them with compressed air.
- Blow out all passages.
- Apply ATF to all parts before assembly.

1. Inspect the check valve (A) on the 3rd and 4th clutch pistons (B); if it's loose, replace the piston.

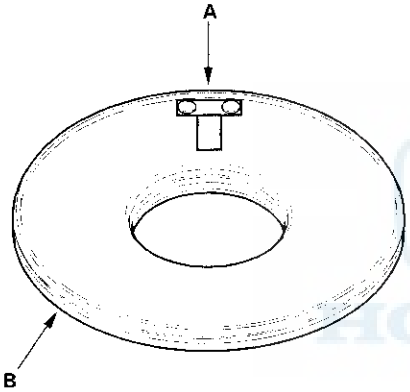

2. Install new O-rings (A) on the piston (B) and the spring retainer (1st and 2nd clutches).

   NOTE: Some spring retainers of the 1st and 2nd clutch have seal lips and do not have O-rings.

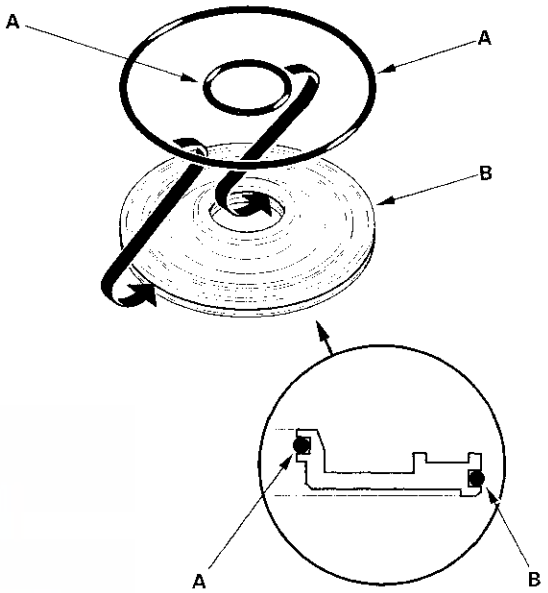

3. Install the piston (A) in the clutch drum (B). Apply pressure and rotate to ensure proper seating. Lubricate the piston O-ring with ATF before installing.

   NOTE: Do not pinch the O-ring by installing the piston with too much force.

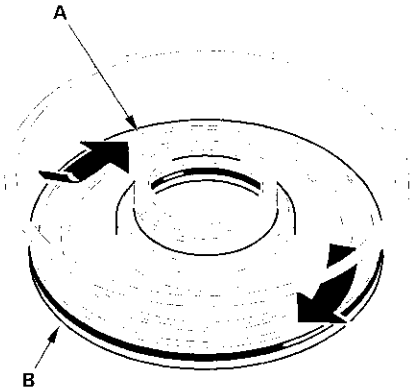

(cont'd)

Clutch Reassembly (cont'd)

4. Install the return spring (A) and spring retainer (B), and position the snap ring (C) on the retainer.

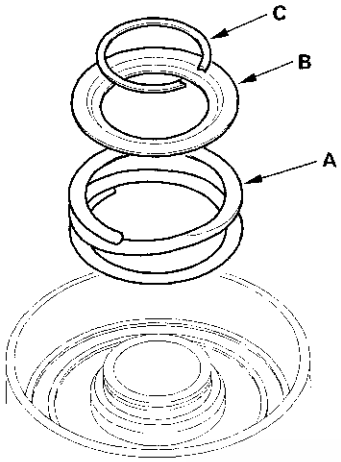

5. Install the special tools on the 3rd/4th clutch assembly.

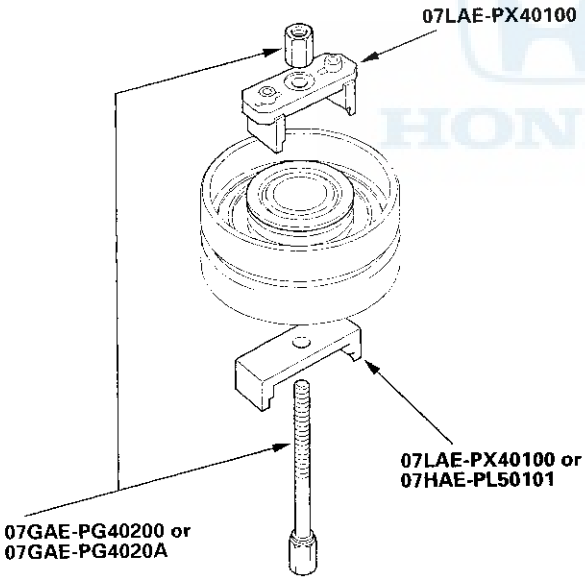

6. Be sure the special too (A) is adjusted to have full contact with the spring retainer (B) on the 3rd and 4th clutches.

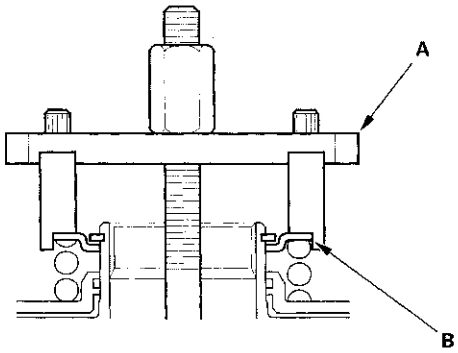

7. Set the special tool (A) on the spring retainer (B) of the 1st and 2nd clutches in such a way that the special tool work on the clutch return spring (C).

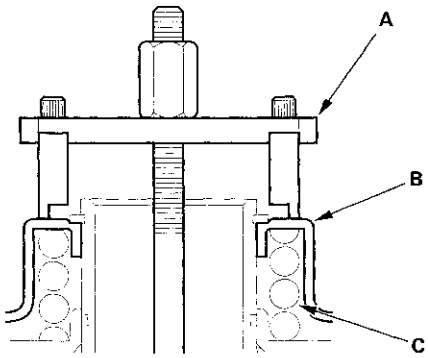

8. If either end of the special tool is set over an area of the spring retainer which is unsupported by the return spring, the retainer may be damaged.

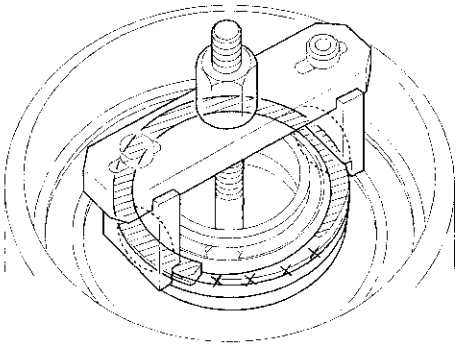

9. Compress the return spring.

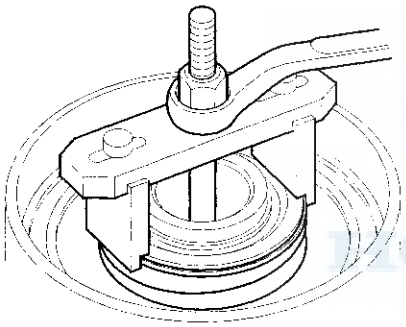

10. Install the snap ring (A).

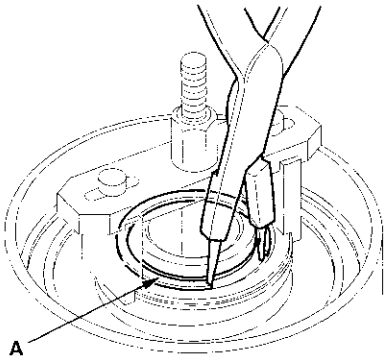

11. Remove the special tools.

12. Install the disc spring in the 1st, 3rd, and 4th clutches in the direction shown.

    NOTE: The 2nd clutch does not have a disc spring.

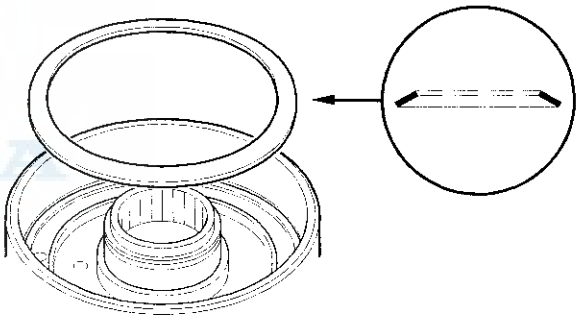

(cont'd)

Clutch Reassembly (cont'd)

13. Soak the clutch discs thoroughly in ATF for a minimum of 30 minutes. Before installing the plates and discs, make sure the inside of the clutch drum is free of dirt and other foreign matter.

14. Starting with a clutch plate, alternately install the clutch plates and discs. Install the clutch end plate (A) with the flat side toward the disc (B).

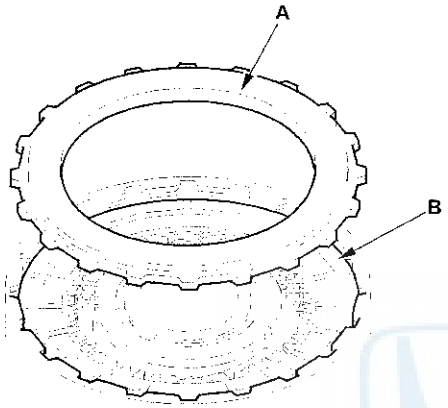

15. Install the snap ring (A) with a screwdriver (B).

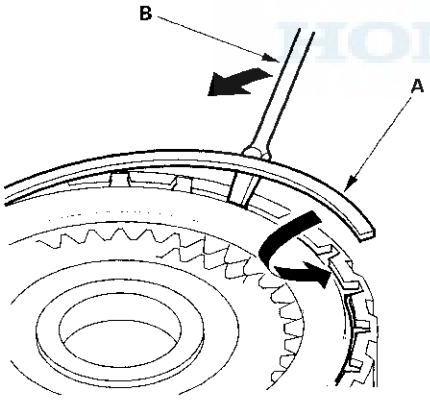

16. Measure the clearance between the clutch end plate (A) and top disc (B) with a dial indicator (C). Zero the dial indicator with the clutch end plate lowered, and lift it up to the snap ring (D). The distance that the clutch end plate moves is the clearance between the clutch end plate and top disc.

NOTE: Take measurement in at least 3 places, and use the average as the actual clearance.

Clutch End Plate-to-Top Disc Clearance:

Clutch	Service Limit
1st	1.2 – 1.4 mm (0.047 – 0.055 in.)
2nd	0.85 – 1.05 mm (0.033 – 0.041 in.)
3rd	0.55 – 0.75 mm (0.022 – 0.030 in.)
4th	0.55 – 0.75 mm (0.022 – 0.030 in.)

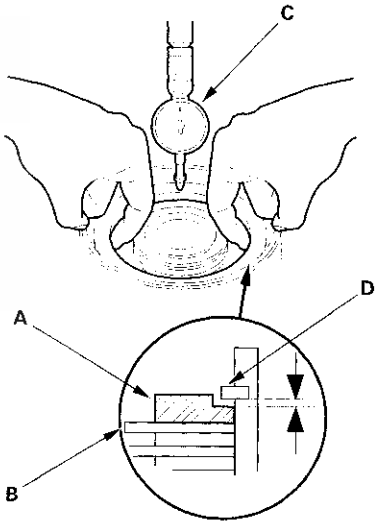

17. If the clearance is not within the service limit, select a new clutch end plate from the following table.

    NOTE: If the thickest clutch end plate is installed, but the clearance is still over the standard, replace the clutch discs and clutch plates as a set.

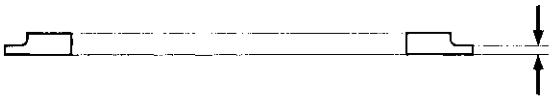

3RD and 4TH CLUTCH END PLATES

Mark	Part Number	Thickness
1	22551-PX4-003	2.1 mm (0.083 in.)
2	22552-PX4-003	2.2 mm (0.087 in.)
3	22553-PX4-003	2.3 mm (0.091 in.)
4	22554-PX4-003	2.4 mm (0.094 in.)
5	22555-PX4-003	2.5 mm (0.098 in.)
6	22556-PX4-003	2.6 mm (0.102 in.)
7	22557-PX4-003	2.7 mm (0.106 in.)
8	22558-PX4-003	2.8 mm (0.110 in.)
9	22559-PX4-003	2.9 mm (0.114 in.)

1ST and 2ND CLUTCH END PLATES

Mark	Part Number	Thickness
6	22551-P7Z-003	2.6mm (0.102 in.)
7	22552-P7Z-003	2.7 mm (0.106 in.)
8	22553-P7Z-003	2.8 mm (0.110 in.)
9	22554-P7Z-003	2.9 mm (0.114 in.)
0	22555-P7Z-003	3.0 mm (0.118 in.)
1	22556-P7Z-003	3.1 mm (0.122 in.)
2	22557-P7Z-003	3.2 mm (0.126 in.)
3	22558-P7Z-003	3.3 mm (0.130 in.)
4	22559-P7Z-003	3.4 mm (0.134 in.)

Valve Bodies and ATF Strainer Installation

Exploded View

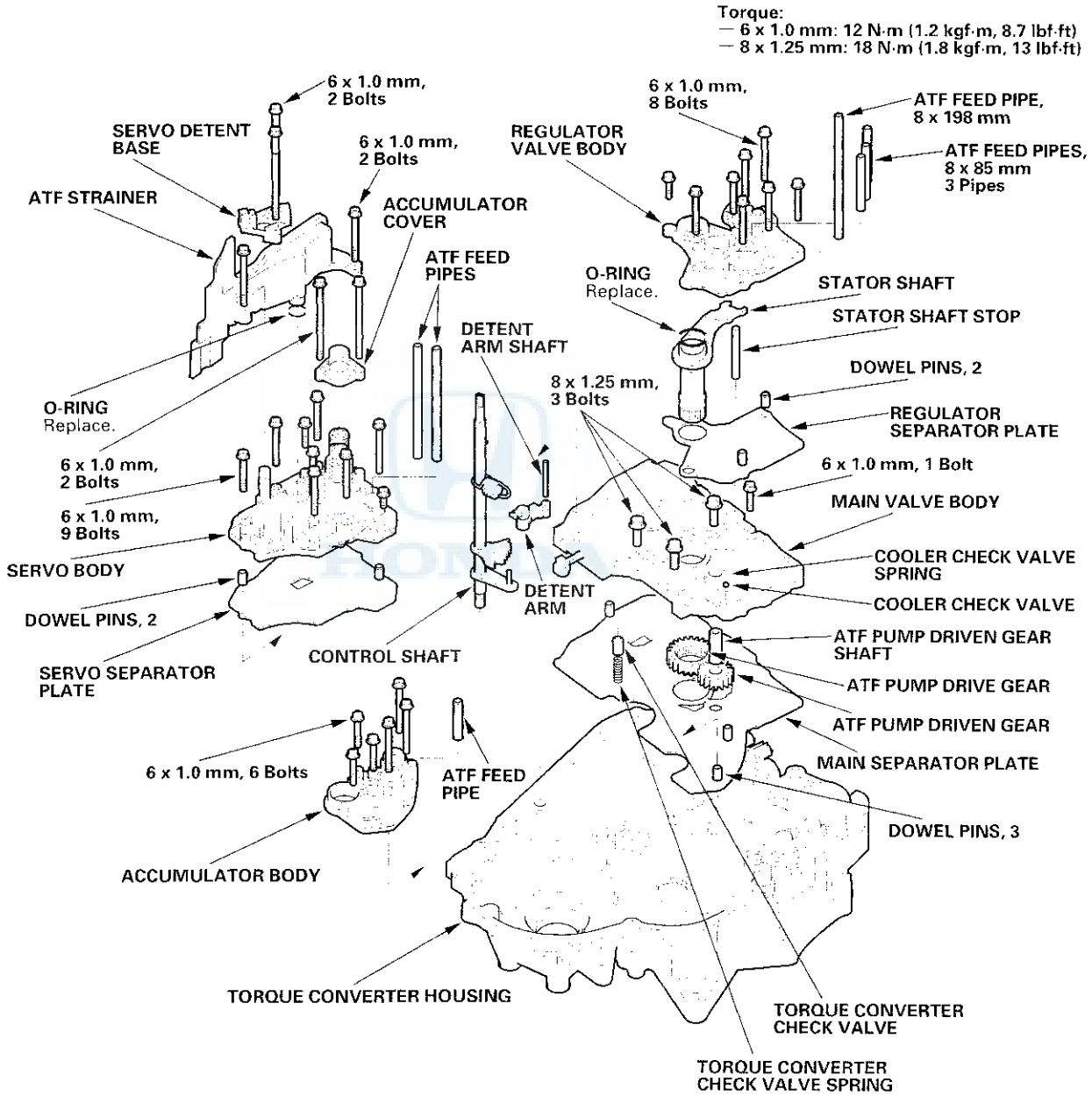

NOTE: Refer to the exploded view as needed during the following procedure.

1. Install the main separator plate (A) and three dowel pins on the torque converter housing. Then install the ATF pump drive gear (B), driven gear (C) and ATF pump driven gear shaft (D). Install the ATF pump driven gear with its grooved and chamfered side facing down.

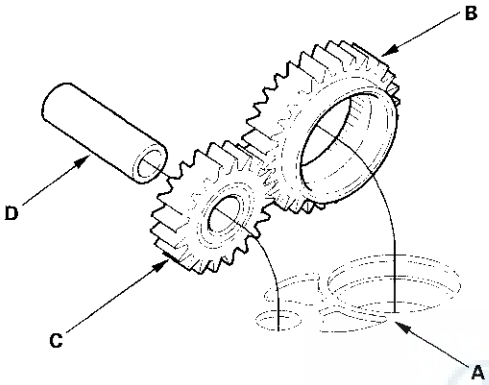

2. Install the torque converter check valve and spring, then install the main valve body (one 6 mm bolt and three 8 mm bolts). Make sure the ATF pump drive gear (B) rotates smoothly in the normal operating direction, and the ATF pump driven gear shaft (D) moves smoothly in the axial and normal operating direction.

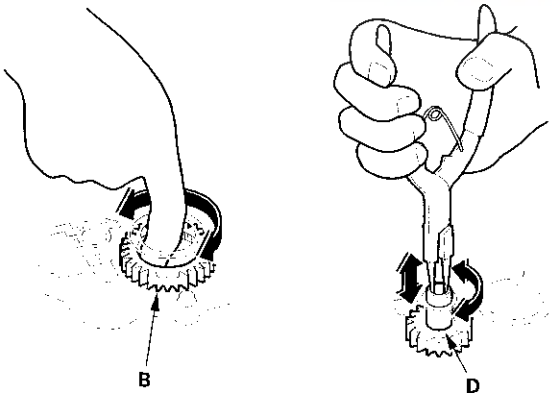

3. If the ATF pump drive gear and ATF pump driven gear shaft do not move smoothly, loosen the main valve body bolts. Realign the ATF pump driven gear shaft, and retighten the bolts to the specified torque, then recheck. Failure to align the ATF pump driven gear shaft correctly will result in a seized ATF pump drive gear or ATF pump driven gear shaft.

4. Install the cooler check valve and spring on the main valve body, then install the two dowel pins and the regulator separator plate.

5. Install the stator shaft and stator shaft stop.

6. Install the regulator valve body (eight bolts).

7. Install the two dowel pins and the servo separator plate on the main valve body.

8. Install the control shaft (A) in the torque converter housing along with the manual valve (B).

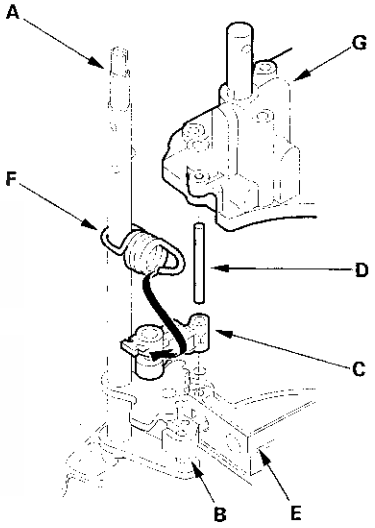

9. Install the detent arm (C) and arm shaft (D) in the main valve body (E), then hook the detent arm spring (F) to the detent arm.

10. Install the servo body (G) (nine bolts).

11. Install the accumulator cover (two bolts).

12. Install the ATF strainer (two bolts).

13. Install the servo detent base (two bolts).

14. Install the accumulator body (six bolts).

15. Install the two ATF feed pipes in the servo body, four pipes in the regulator valve body, and one pipe in the accumulator body.

Shaft Assemblies and Housing Installation

Exploded View

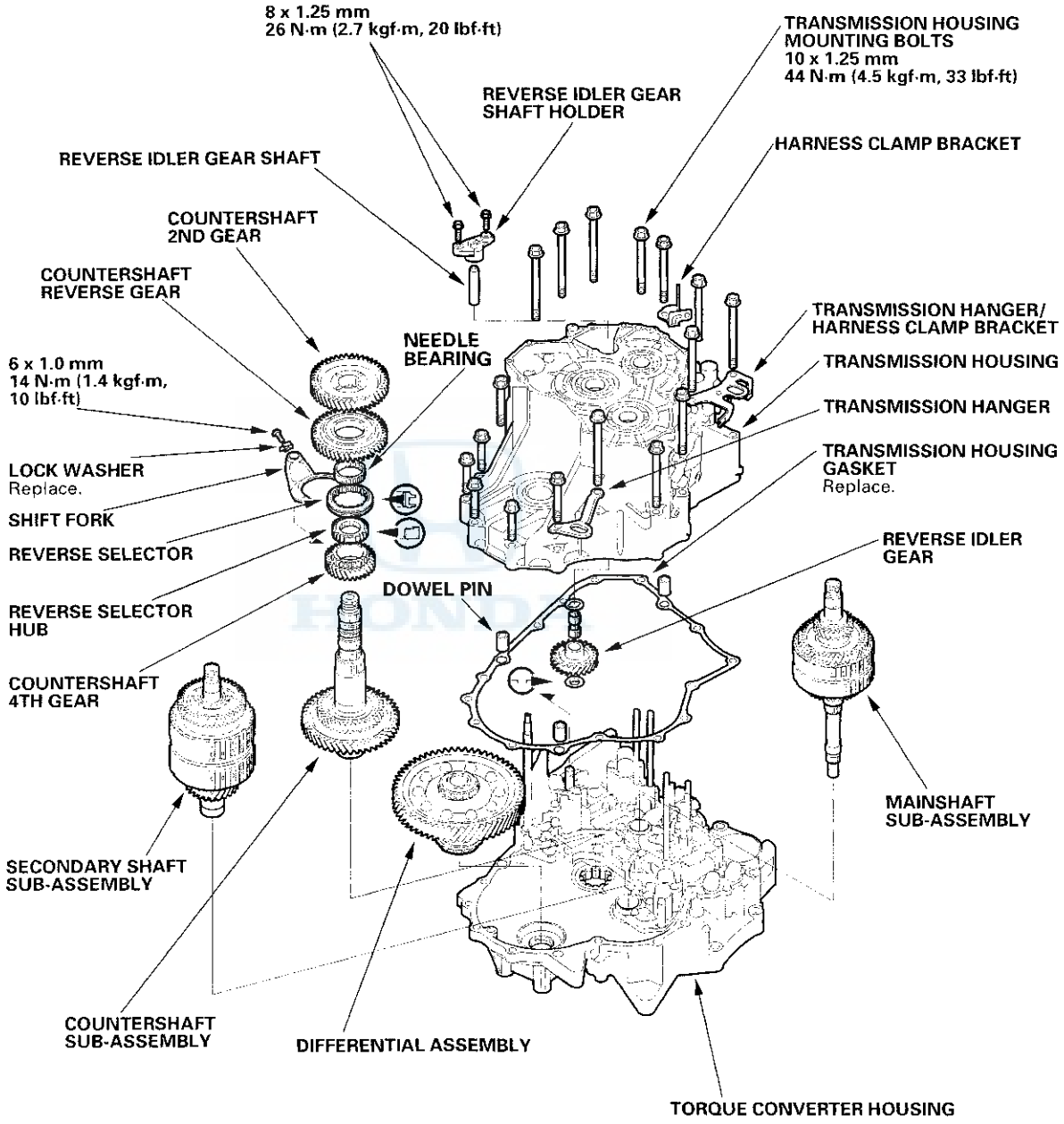

NOTE: Refer to the Exploded View as needed during the following procedure.

1. Install the differential assembly, countershaft sub-assembly, mainshaft sub-assembly, and secondary shaft sub-assembly in the torque converter housing.

2. Install the countershaft 4th gear and reverse selector hub on the countershaft. If the reverse selector hub is a press-fitted type, refer to the installation procedure (see page 14-173).

3. Turn the shift fork shaft (A) so the large chamfered hole is facing the fork bolt hole. Then install the shift fork (B) and reverse selector (C) together on the shift fork shaft and countershaft (D). Secure the shift fork to the shift fork shaft with the lock bolt (E) and a new lock washer (F), then bend the lock washer against the bolt head.

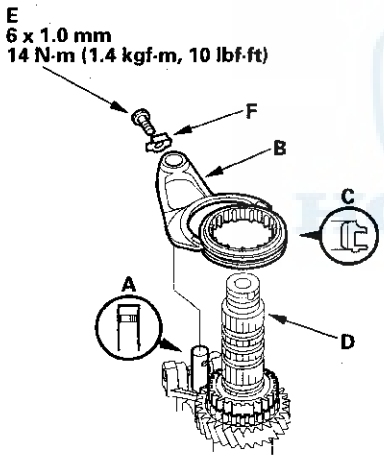

4. Install the needle bearing, countershaft reverse gear, and countershaft 2nd gear on the countershaft.

5. Place the thrust washer (A) in the transmission housing.

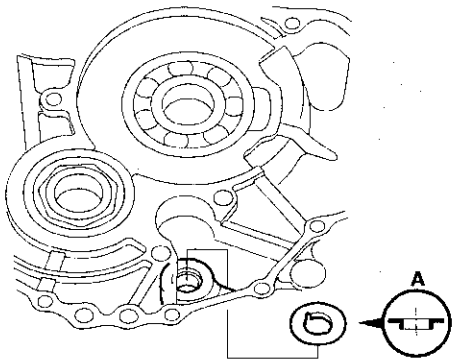

6. Place the reverse idler gear (A) in the transmission housing as shown, then slide it in the direction shown.

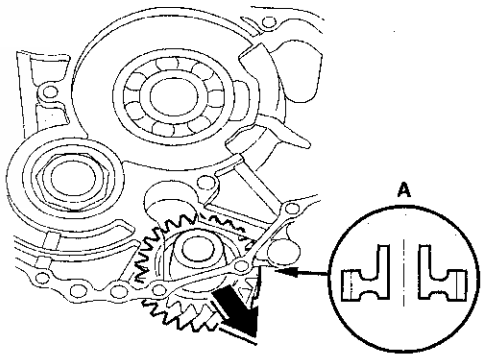

(cont'd)

Shaft Assemblies and Housing Installation (cont'd)

7. Align the spring pin (A) on the control shaft (B) with the transmission housing groove (C) by turning the control shaft.

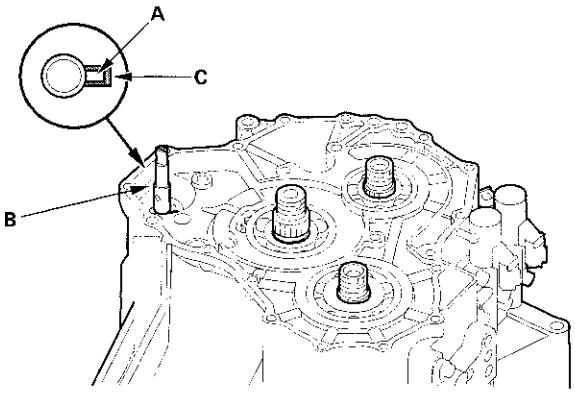

8. Install three dowel pins and a new gasket on the torque converter housing.

9. Place the transmission housing on the torque converter housing, then install the transmission housing mounting bolts along with the harness clamp bracket (A), transmission hanger (B) and transmission hanger/harness clamp bracket (C). Tighten the bolts in two or more steps in the sequence shown.

TORQUE: 44N·m (4.5 kgf·m, 33 lbf·ft)

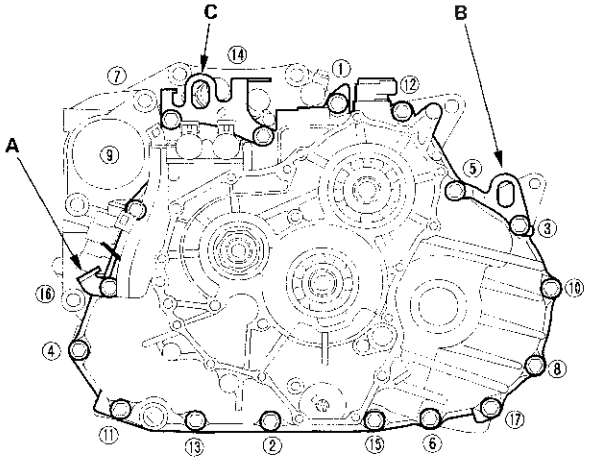

10. Engage the reverse idler gear with the countershaft reverse gear and the mainshaft reverse gear. Then install the needle bearings (A), reverse idler gear shaft (B) and thrust washer (C) in the reverse idler gear, and install the reverse idler gear shaft holder (D) on the transmission housing.

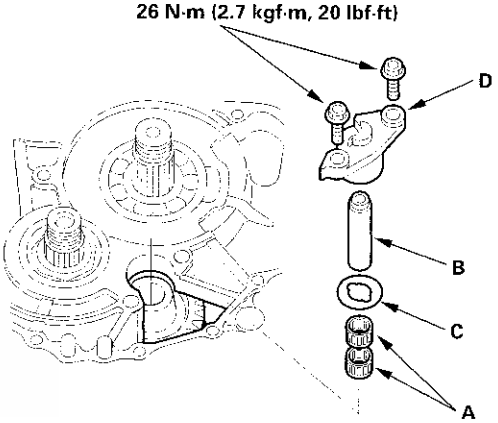

End Cover and Idler Gears Installation

Special Tools Required
Mainshaft holder
07GAB-PF50101 or 07GAB-PF50100

1. Install the park lever (A) and park lever stop (B) on the control shaft (C), then install the lock bolt (D) with a new lock washer (E). Do not bend the lock tab of the lock washer in this step; bend it after checking park pawl engagement.

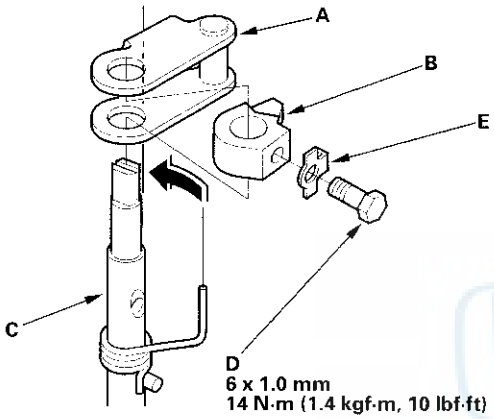

2. Lubricate the following parts with ATF:
   - Splines of the countershaft, the park gear, and the old locknut.
   - Threads of the countershaft and the old locknut.
   - Old conical spring washer.

3. Install the park gear (A) using the old locknut (B) and a collar (C). Hold the park pawl (D) to engage with the park gear, then tighten the old locknut until the shaft splines come out slightly over the park gear splines.

   NOTE:
   - Do not use an impact wrench.
   - Countershaft locknut has left-hand threads.

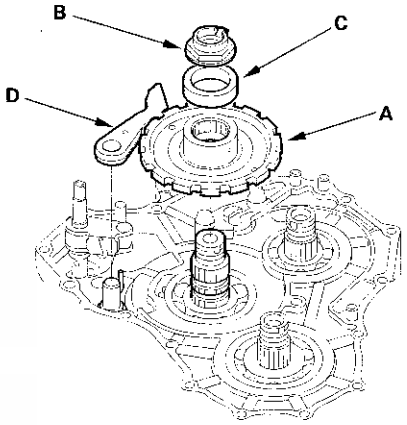

4. Remove the locknut and the collar, then install only the bearing hub/bearing assembly (A) and old conical spring washer (B). Tighten the old locknut (C) to seat the park gear to 226 N·m (23.0 kgf·m, 166 lbf·ft), then remove the locknut and conical spring washer.

   NOTE: Do not use an impact wrench, always use a torque wrench to tighten the locknut.

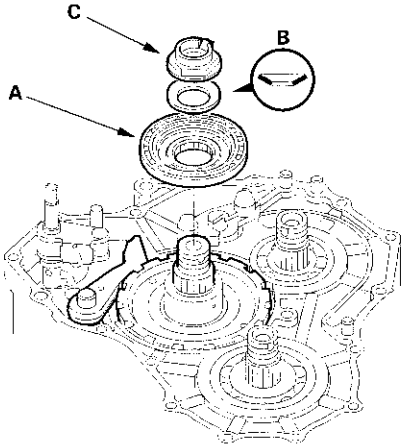

(cont'd)

End Cover and Idler Gears Installation (cont'd)

5. Remove the bearing hub/bearing assembly (A) with a puller (B).

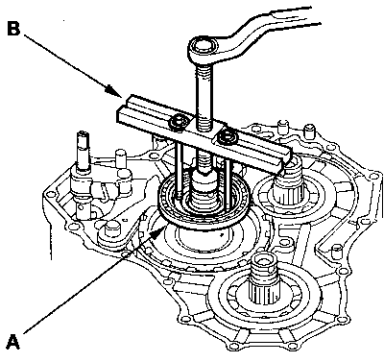

6. Install the thrust needle bearing (A), needle bearing (B), countershaft idler gear (C), thrust needle bearing (D), bearing hub/bearing assembly (E), and the old conical spring washer (F). Then tighten the old locknut (G) to seat the bearing hub/bearing assembly to 164 N·m (17.0 kgf·m, 123 lbf·ft).

   NOTE: Do not use an impact wrench, always use a torque wrench to tighten the locknut.

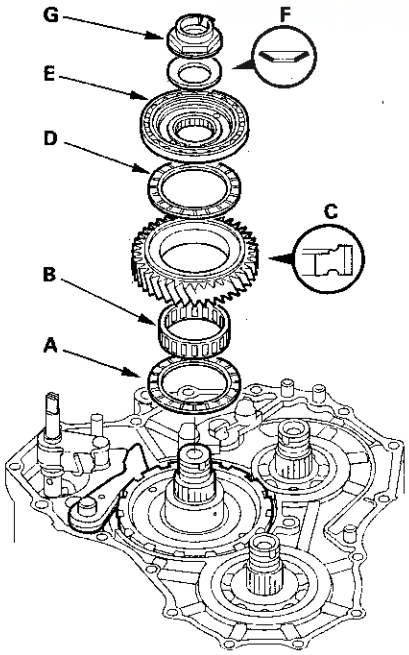

7. Set the dial indicator (A) to the countershaft idler gear (B) as shown.

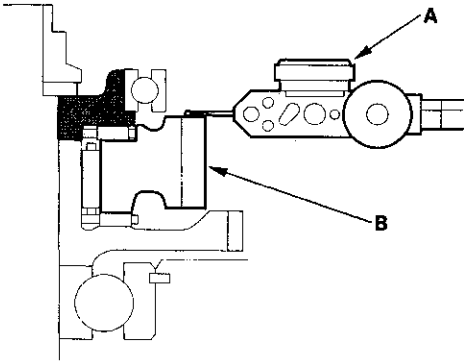

8. Measure the countershaft idler gear axial clearance in at least three places, while moving the countershaft idler gear (A).
   Use the average as the actual clearance.

   STANDARD: 0.015–0.045 mm (0.0006–0.0018 in.)

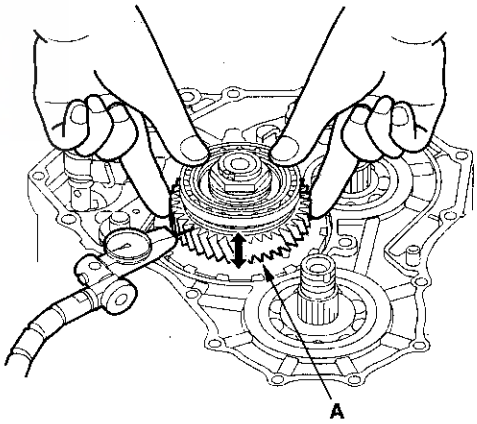

9. If the clearance is out of standard, remove the bearing hub/bearing assembly using a puller as described on the previous page.

10. Select and install the new bearing hub/bearing assembly, then recheck.

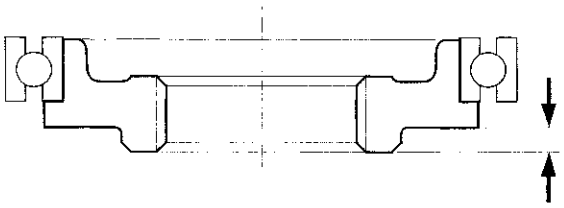

BEARING HUB

Mark	Part Number	Difference
A	90520-P6H-000	3.503 mm (0.1379 in.)
B	90521-P6H-000	3.490 mm (0.1374 in.)
C	90522-P6H-000	3.477 mm (0.1369 in.)
D	90523-P6H-000	3.464 mm (0.1364 in.)

11. After replacing the bearing hub/bearing assembly make sure the clearance is within standard.

12. Remove the old locknut and old conical spring washer from the countershaft.

13. Install the special tool onto the mainshaft.

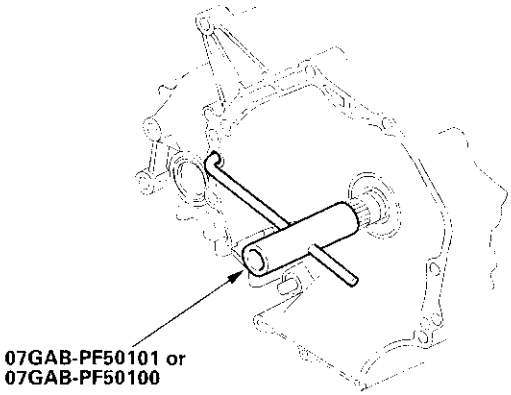

14. Lubricate the following parts with ATF:
    - Splines of the mainshaft, secondary shaft, and idler gears.
    - Threads of the mainshaft, secondary shaft, and new locknuts.
    - Old conical spring washers.

15. Install the mainshaft idler gear (A) and the old conical spring washer (B) on the mainshaft (C). Tighten the old locknut (D) to seat the mainshaft idler gear to 226 N·m (23.0 kgf·m, 166 lbf·ft).

    NOTE: Do not use an impact wrench, always use a torque wrench to tighten the locknut.

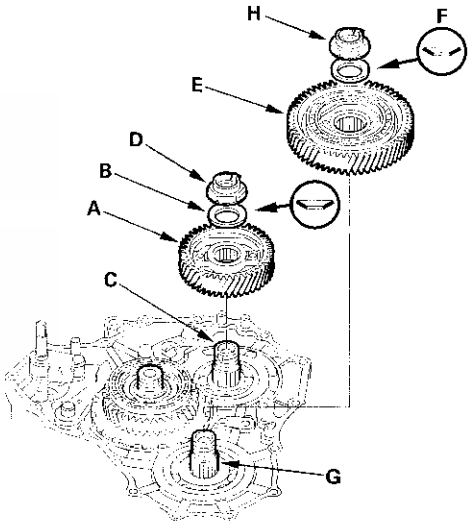

16. Install the secondary shaft idler gear (E) and the old conical spring washer (F) on the secondary shaft (G). Tighten the old locknut (H) to seat the secondary shaft idler gear to 226 N·m (23.0 kgf·m, 166 lbf·ft)

    NOTE:
    - Do not use an impact wrench, always use a torque wrench to tighten the locknut.
    - Secondary shaft locknut has left-hand threads.

17. Remove the old locknuts and old conical spring washer from the mainshaft and the secondary shaft.

(cont'd)

End Cover and Idler Gears Installation (cont'd)

18. Lubricate the threads of each shaft and new locknuts, and new conical spring washers with ATF.

19. Install the new conical spring washers (A) in the direction shown, and install the new locknuts (B).

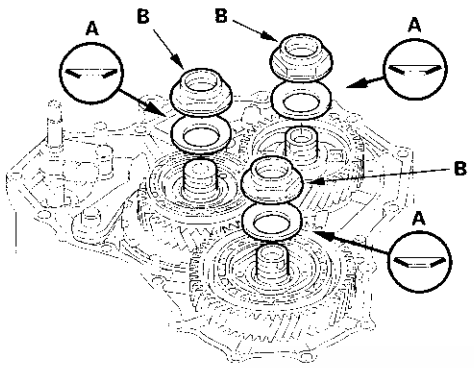

20. Tighten the locknuts to 167 N·m (17.0 kgf·m, 123 lbf·ft).

    NOTE:
    - Do not use an impact wrench, always use a torque wrench to tighten the locknut.
    - Coutershaft and secondary shaft locknuts have left-hand threads.

21. Stake each locknut into its shaft using a 3.5 mm punch.

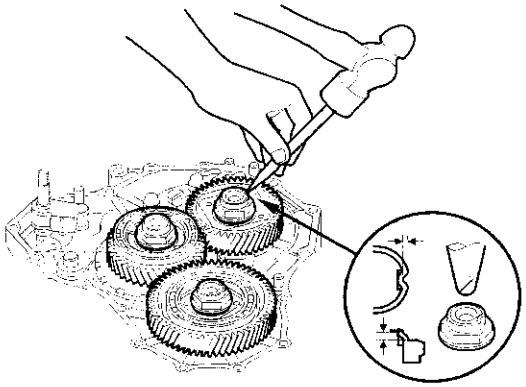

22. For '00-01 models: Install the pitot flange (A) on the mainshaft idler gear (B), then install the lubrication pitot pipe (C) and the pitot pipe (D) on the transmission housing.

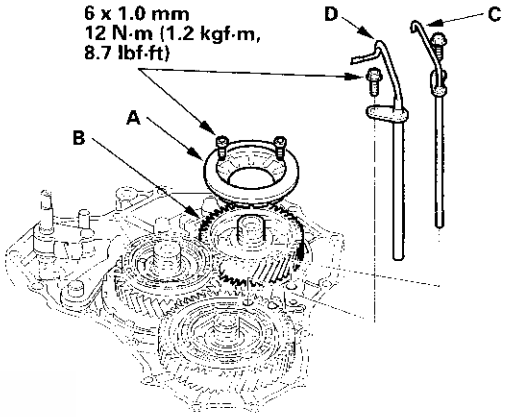

23. Set the park lever in the P position, then verify that the park pawl (A) engages the park gear (B).

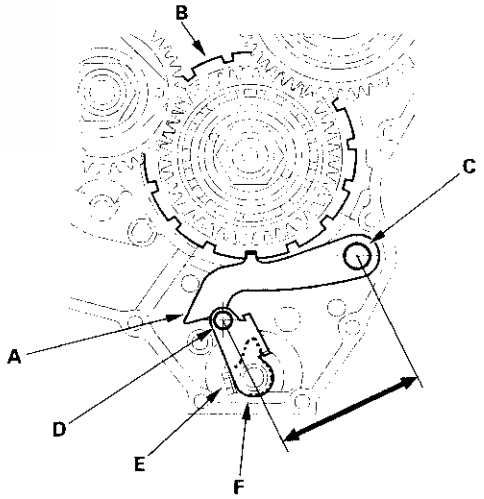

24. If the park pawl does not engage fully, check the distance between the pawl shaft (C) and the park lever roller pin (D) (see page 14-153).

25. Tighten the lock bolt (E), and bend the lock tab of the lock washer (F) against the lock bolt head.

26. Install the end cover (A) along with two dowel pins, new O-rings, new gasket, and harness clamp bracket (B). Tighten the 16 bolts to 12 N·m, (1.2 kgf·m, 8.7 lbf·ft).

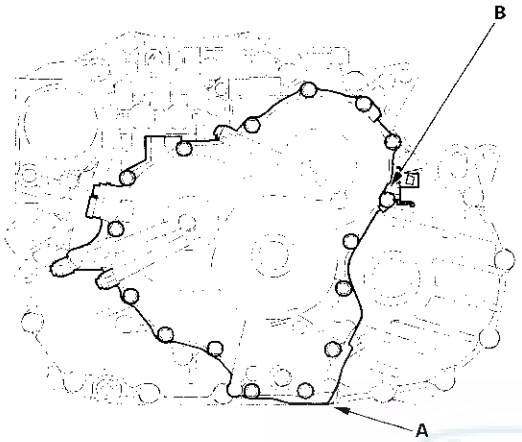

27. Set the transmission range switch to N position.

NOTE: The transmission range switch clicks in N position.

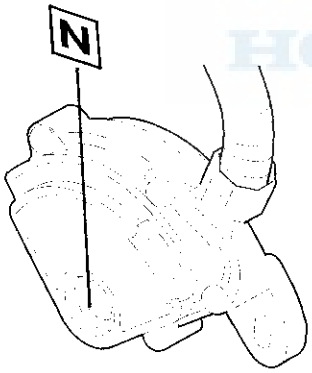

28. Set the control shaft (A) to the N position by turning it.

NOTE: Be careful not to squeeze the end of the control shaft tips together when turning into position. If the tips are squeezed together it will cause a faulty shift signal or position due to the play between the control shaft and the switch.

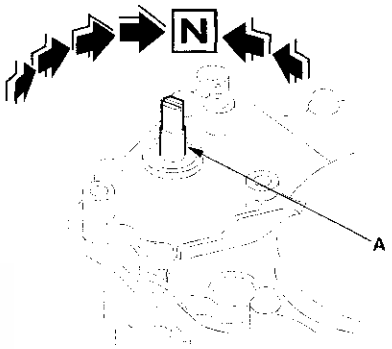

(cont'd)

End Cover and Idler Gears Installation (cont'd)

29. Install the transmission range switch (A) loosely on the control shaft (B), then secure it with the bolts. Do not move the transmission range switch when tightening the bolts.

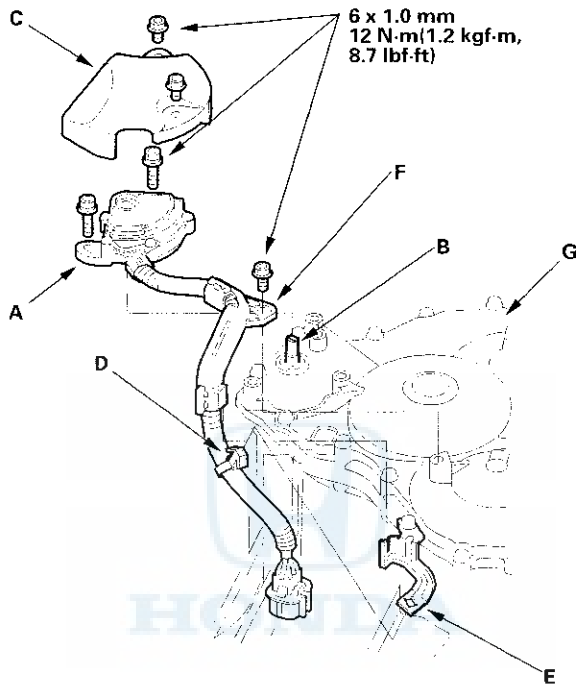

30. Install the transmission range switch cover (C), and install the harness clamp (D) on the clamp bracket (E) on the transmission housing, then install the harness clamp (F) on the end cover (G).

31. Install the ATF cooler lines and new sealing washers. Tighten the line fittings to 28 N·m (2.9 kgf·m, 21 lbf·ft)

32. Install the breather tube.

33. Install the ATF dipstick.

Component Location Index

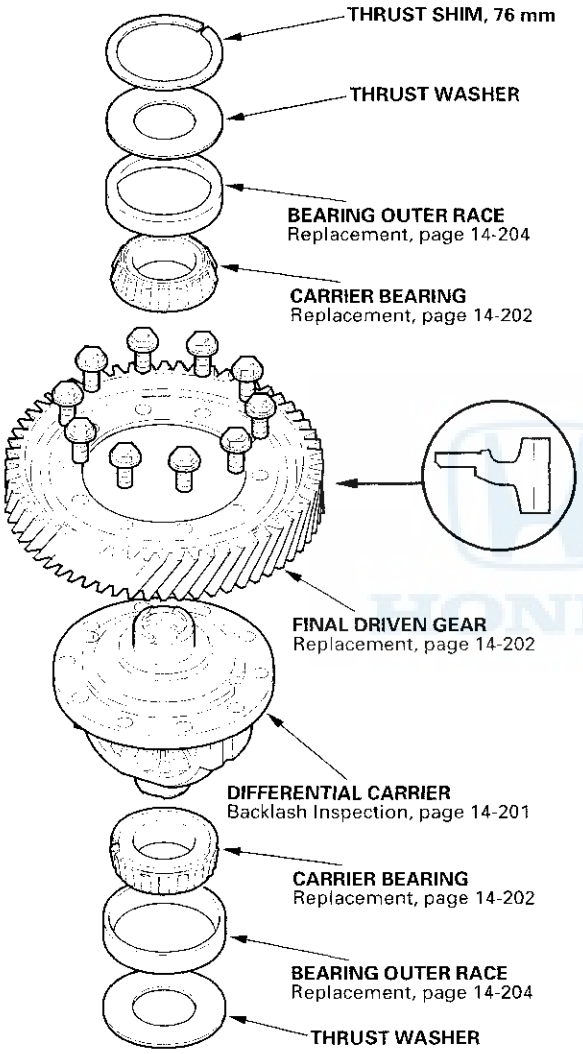

Backlash Inspection

1. Install both axles, and place the differential assembly on V-blocks (A).

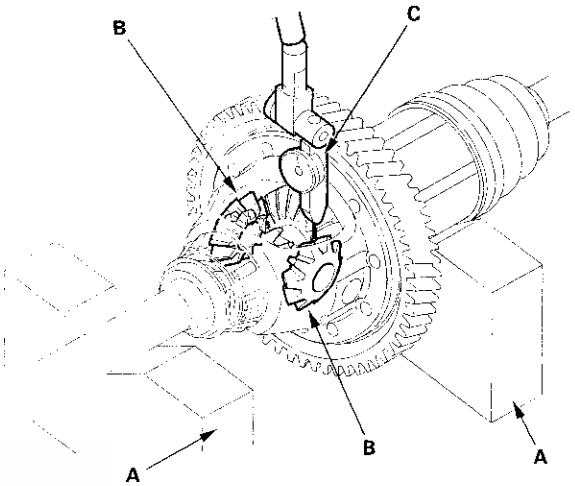

2. Check the backlash of both pinion gears (B) with a dial indicator (C).

   STANDARD: 0.05 – 0.15 mm (0.002 – 0.006 in.)

3. If the backlash is out of standard, replace the differential carrier.

Final Driven Gear/Carrier Replacement

1. Remove the final driven gear from the differential carrier.

   NOTE: The final driven gear bolts have left-hand threads.

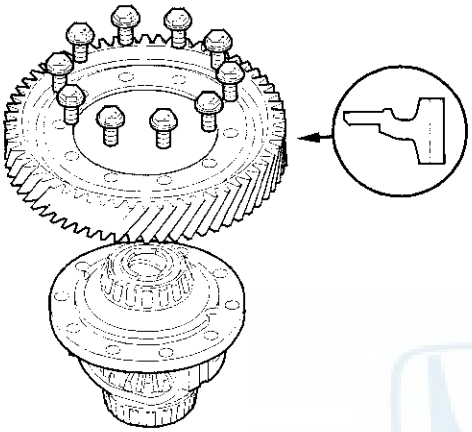

2. Install the final driven gear with the chamfered side on the inner bore facing the differential carrier.

3. Tighten the bolts to the specified torque in a crisscross pattern.

   TORQUE: 101 N·m (10.3 kgf·m, 74.5 lbf·ft)

Carrier Bearing Replacement

Special Tools Required
Attachment, 40 x 50 mm 07LAD-PW50601

NOTE:
- The bearing and outer race should be replaced as a set.
- Inspect and adjust the bearing preload whenever bearing is replaced.
- Check the bearing for wear and rough rotation. If the bearing is OK, removal is not necessary.

1. Remove the carrier bearing (A) with a commercially available bearing puller (B), bearing separator (C), and stepped adapter (D).

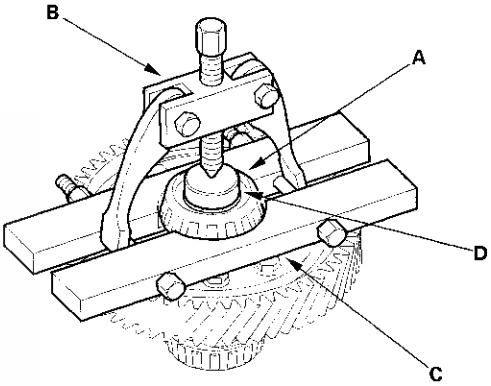

2. Install the new carrier bearings with the special tool and a press.

   NOTE:
   - Press the bearings on until they bottom.
   - Use the small end of the special tool to install the bearing.
   - Press the bearings on securely so there is no clearance between the bearings and the differential carrier.

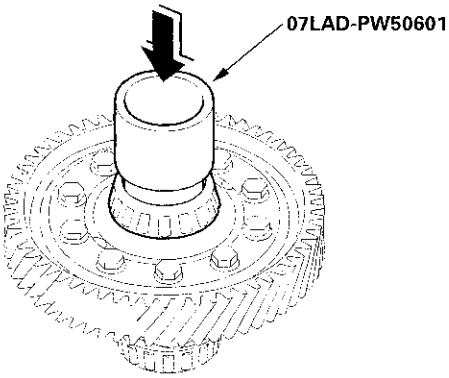

Oil Seal Replacement

Special Tools Required
- Driver 07749-0010000
- Seal driver attachment 07GAD-PG40101 or 07GAD-PG40100
- Pilot, 28 x 30 mm 07JAD-PH80400
- Oil seal driver attachment 07JAD-PH80101

1. Remove the differential assembly.

2. Remove the oil seal (A) from the transmission housing (B).

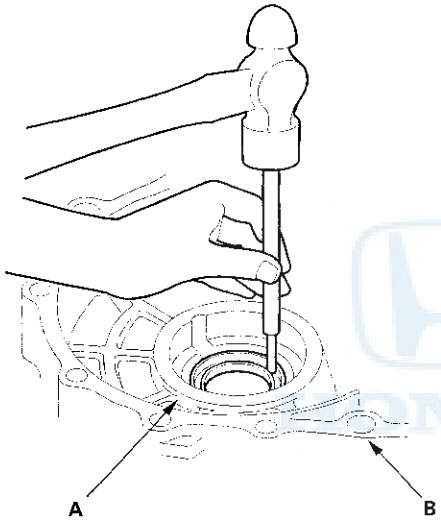

3. Remove the oil seal (A) from the torque converter housing (B).

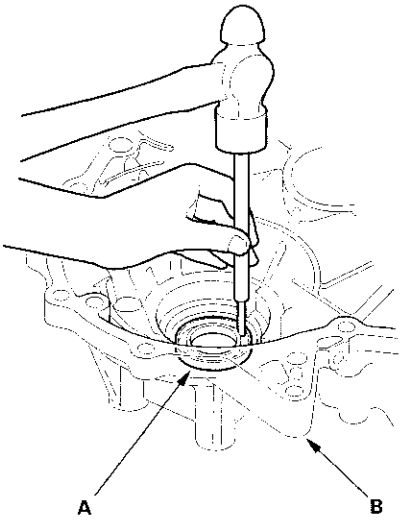

4. Install the oil seal (A) in the transmission housing with the special tools.

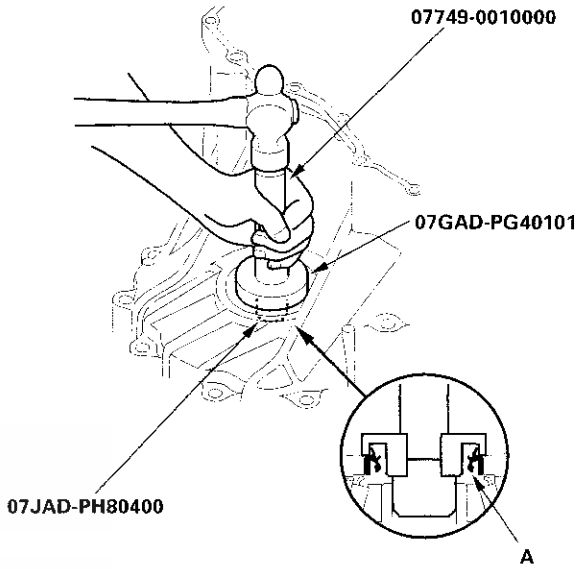

5. Install the oil seal (A) in the torque converter housing with the special tools.

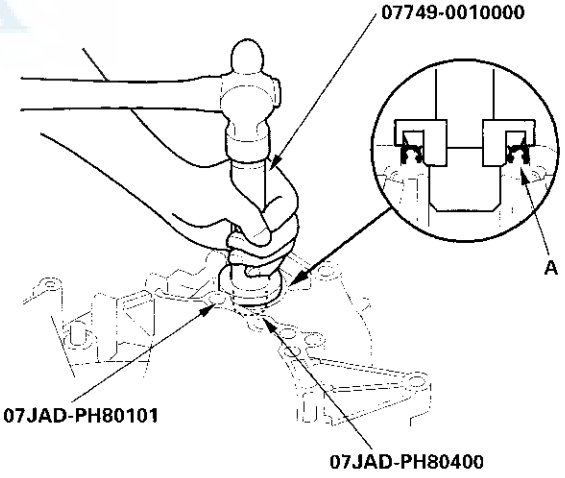

Carrier Bearing Outer Race Replacement

Special Tools Required
- Driver 07749-0010000
- Attachment, 78 x 80 mm 07NAD-PX40100

NOTE:
- Replace the bearing with a new one whenever the outer race is to be replaced.
- Do not use shim(s) on the torque converter housing side.
- Adjust preload after replacing the bearing and outer race.
- Coat all parts with ATF during installation.

1. Remove the bearing outer race from the transmission housing by heating the housing to about 212°F (100°C) with a heat gun. Do not heat the housing more than 212°F (100°C).

2. Remove the bearing outer race from the torque converter housing.

3. Install the thrust shim (A), thrust washer (B) and outer race (C) in the transmission housing (D) with the special tools.

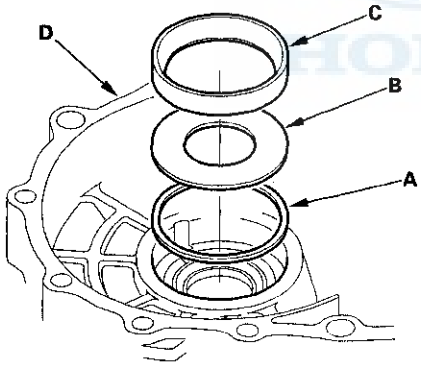

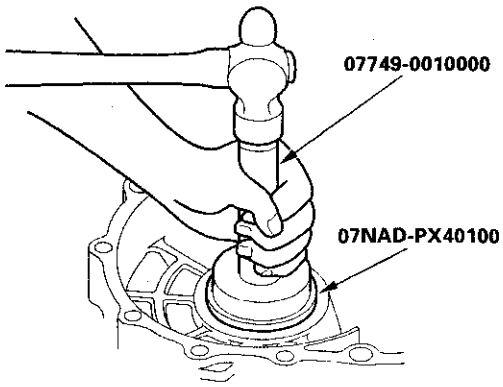

4. Install the thrust washer (A) and outer race (B) in the torque converter housing (C), and be sure to install the outer race until it bottoms in the housing with the special tools.

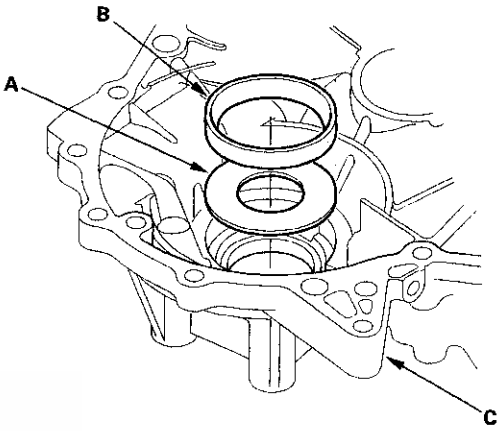

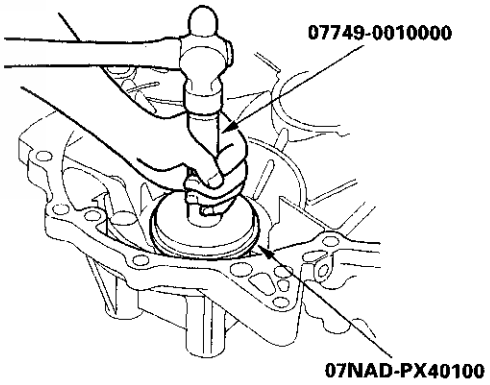

Carrier Bearing Preload Inspection

Special Tools Required
- Driver 07749-0010000
- Attachment, 78 x 80 mm 07NAD-PX40100
- Preload inspection tool 07HAJ-PK40201

NOTE: If the transmission housing, torque converter housing, differential carrier, tapered roller bearing, outer race, or thrust shim were replaced, the bearing preload must be adjusted.

1. Remove the bearing outer race (A), thrust washer (B) and thrust shim (C) from the transmission housing (D) by heating the housing to about 212°F (100°C) with a heat gun (E). Do not heat the housing more than 212°F (100°C).

   NOTE: Let the transmission housing cool to room temperature before adjusting the bearing preload.

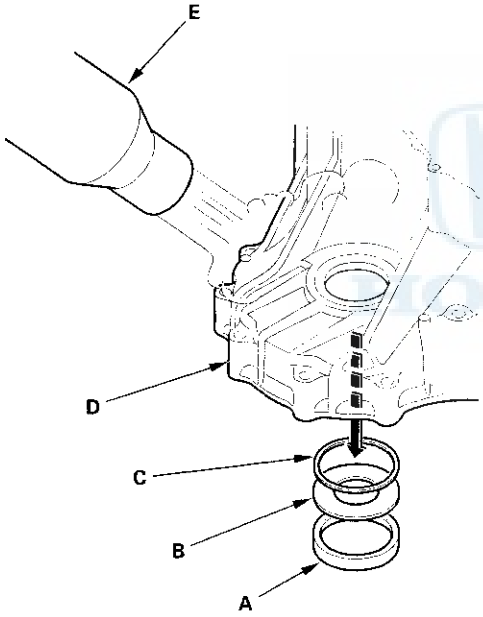

2. Replace the tapered roller bearing when the outer race is to be replaced.

3. Do not use a shim on the torque converter housing side.

4. Select the 2.60 mm (0.102 in.) thrust shim from the middle of the table below.

THRUST SHIM, 76 mm

No.	Part Number	Thickness
S	41438-PX4-700	2.05 mm (0.081 in.)
T	41439-PX4-700	2.01 mm (0.083 in.)
U	41440-PX4-700	2.15 mm (0.085 in.)
A	41441-PK4-000	2.20 mm (0.087 in.)
B	41442-PK4-000	2.25 mm (0.089 in.)
C	41443-PK4-000	2.30 mm (0.091 in.)
D	41444-PK4-000	2.35 mm (0.093 in.)
E	41445-PK4-000	2.40 mm (0.094 in.)
F	41446-PK4-000	2.45 mm (0.096 in.)
G	41447-PK4-000	2.50 mm (0.098 in.)
H	41448-PK4-000	2.55 mm (0.100 in.)
I	41449-PK4-000	2.60 mm (0.102 in.)
J	41450-PK4-000	2.65 mm (0.104 in.)
K	41451-PK4-000	2.70 mm (0.106 in.)
L	41452-PK4-000	2.75 mm (0.108 in.)
M	41453-PK4-000	2.80 mm (0.110 in.)
N	41454-PK4-000	2.85 mm (0.112 in.)
O	41455-PK4-000	2.90 mm (0.114 in.)
P	41456-PK4-000	2.95 mm (0.116 in.)
Q	41457-PK4-000	3.00 mm (0.118 in.)
R	41458-PK4-000	3.05 mm (0.120 in.)

(cont'd)

Carrier Bearing Preload Inspection (cont'd)

5. Install the thrust shim (A), thrust washer (B), and bearing outer race (C) in the transmission housing (D).

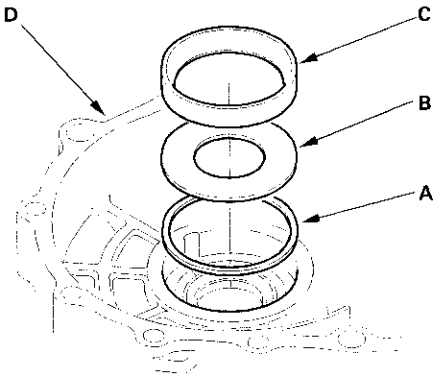

6. Drive the outer race with the special tools, and install it securely in the transmission housing.

7. Check that there is no clearance between the thrust washer, outer race, shim, and transmission housing.

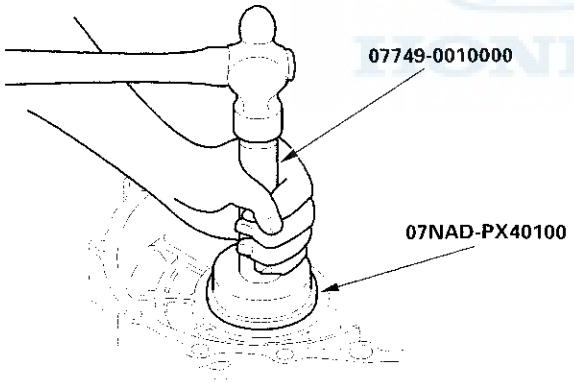

8. Install the differential assembly (A), gasket (B), and dowel pins (C) on the torque converter housing (D). Align the spring pin on the control shaft (E) with the transmission housing groove.

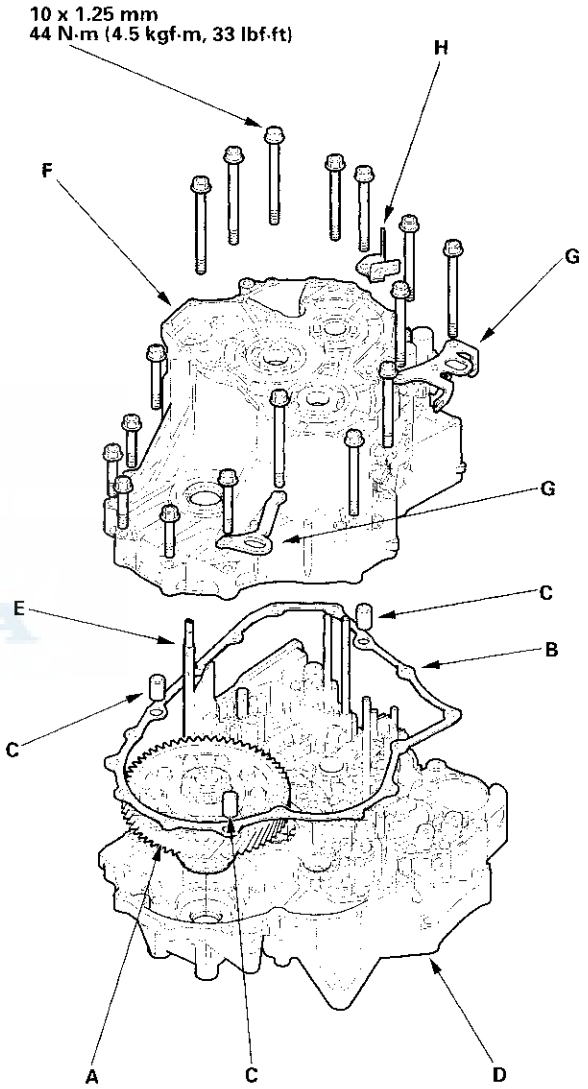

9. Install the transmission housing (F) with the transmission hangers (G) and harness clamp bracket (H), and tighten the bolts.

10. Rotate the differential assembly in both directions to seat the bearings.

11. Measure the starting torque of the differential assembly with the special tool and a torque wrench (A). Measure the starting torque at normal room temperature in both directions.

STANDARD:

New bearing:	**2.7 – 3.9 N·m (28 – 40 kgf·cm, 24 – 35 lbf·in.)**
Reused bearings:	**2.5 – 3.6 N·m (25 – 37 kgf·cm, 22 – 32 lbf·in.)**

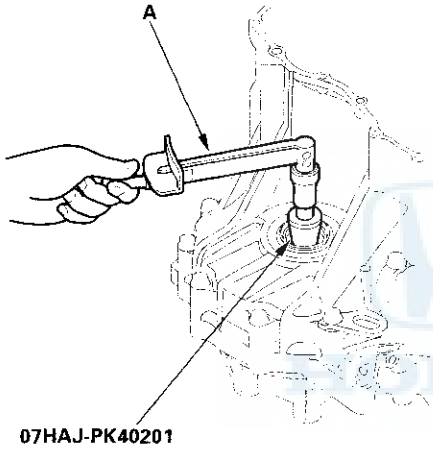

12. To increase the starting torque, increase the thickness of the shim. To decrease the starting torque, decrease the thickness of the shim. Changing the shim to the next size will increase or decrease starting torque about 0.3 – 0.4 N·m (3 – 4 kgf·cm, 3 – 3 lbf·in.).

Transaxle

Driveline/Axle

NOTE: Refer to the '98 – 01 Accord Service Manual, P/N 61S8008, for the items not shown in this section.

Outline of Model Changes

'98 model:
- The installation length of the driveshafts is different; installation instructions and specifications are included.
- The installation position of the intermediate shaft is different; related service information is included.

'99 model:
- The Thermoplastic Polyester Elastomer (TPE) outboard boot has been added.
- The replacement procedure for ear clamp type boot bands has been added.
- The outboard joint disassembly/reassembly procedure has been added.

'01 model:
- The replacement procedure for low profile type boot bands has been added.

Special Tools

Ref. No.	Tool Number	Description	Qty
①	07LAF-SM40300	Support Base Attachment	1
②	07746-0010300	Attachment, 42 x 47 mm	1
③	07749-0010000	Driver	1
④	07947-SD90101	Oil Seal Driver, Attachment	1
⑤	07947-4630100	Fork Seal Driver, 39.2x49.5x15 mm	1
⑥	07947-6340500	Driver Attachment	1
⑦	07965-SD90100	Support Base	1

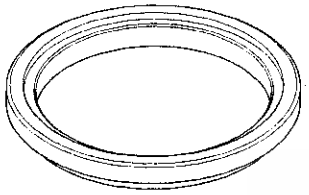

①

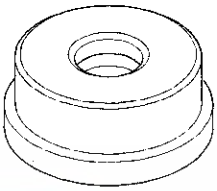

②

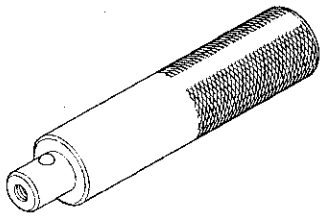

③

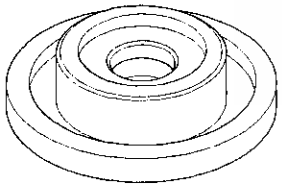

④

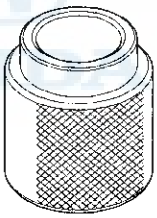

⑤

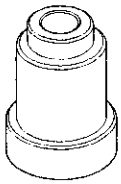

⑥

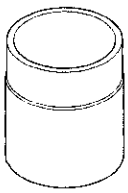

⑦

Driveshafts Reassembly

Exploded View

'98-00 model

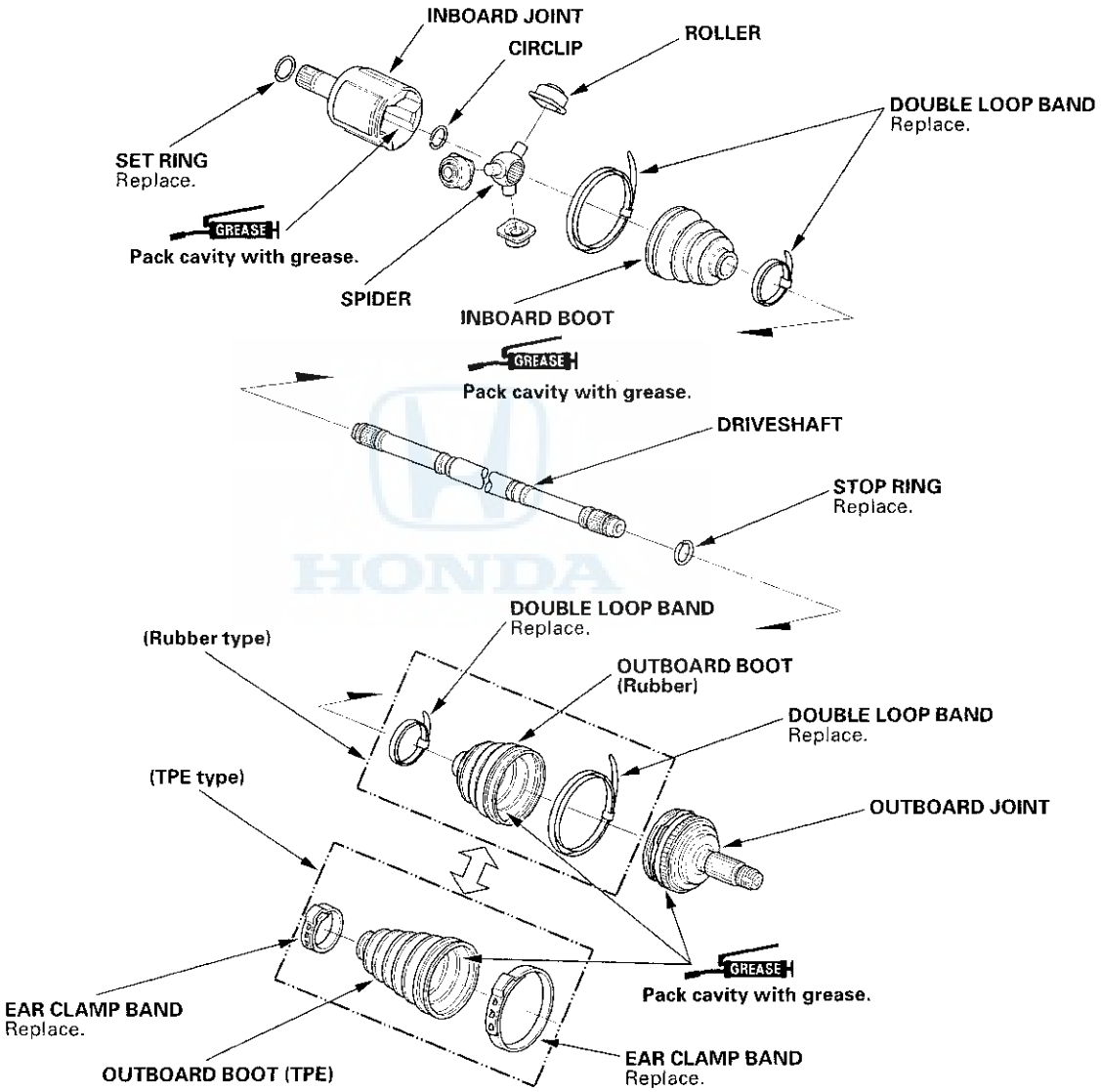

(cont'd)

Driveshafts Reassembly (cont'd)

'01 model

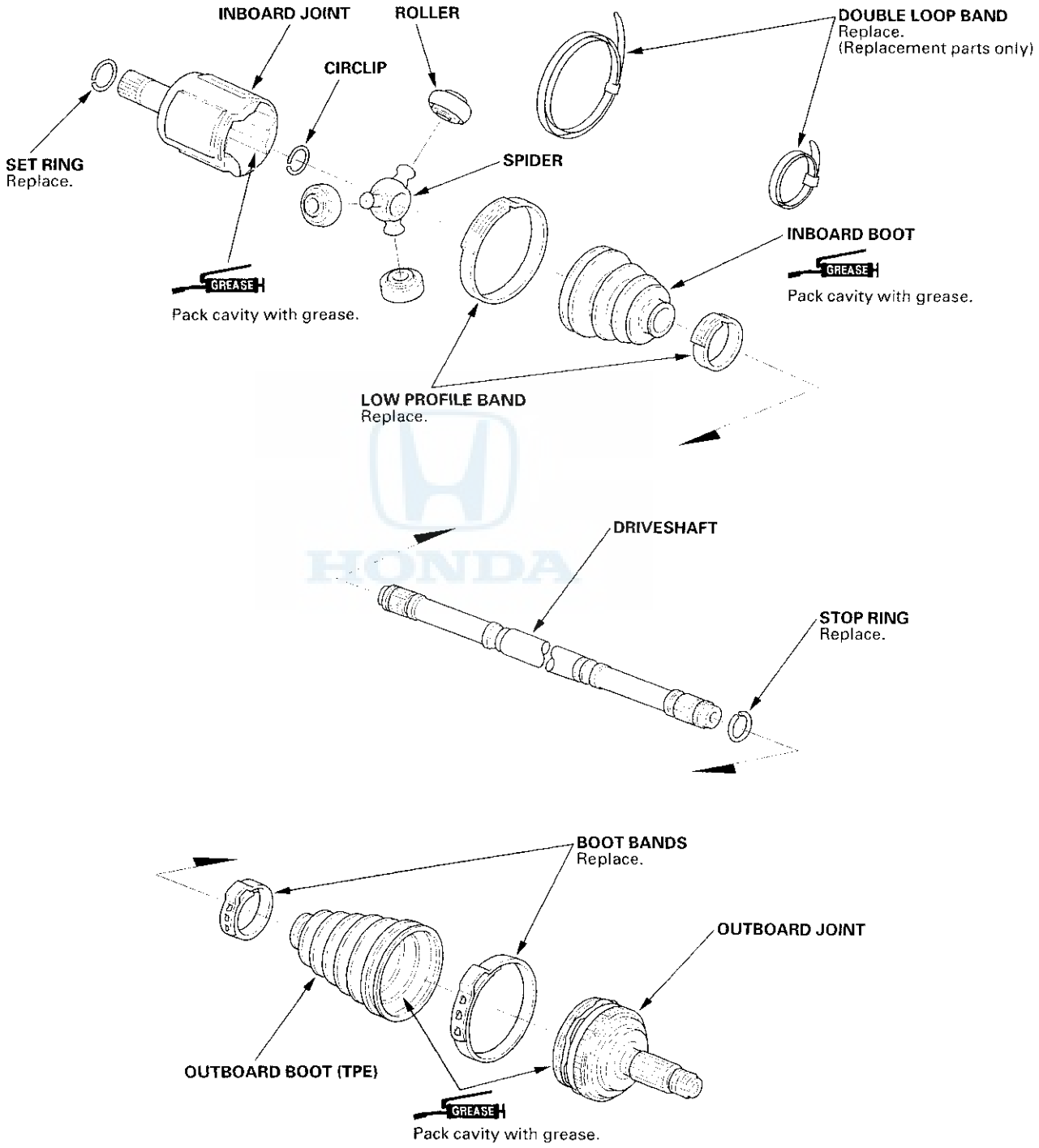

Special Tools Required
- Boot band tool, KD-3191 or equivalent commercially available
- Boot band pincers, KENT-MOORE J-35910 or equivalent commercially available
- Boot band pincers, commercially available

NOTE: Refer to the Exploded View as needed during this procedure.

Inboard Joint Side

1. Wrap the splines with vinyl tape (A) to prevent damage to the inboard boot.

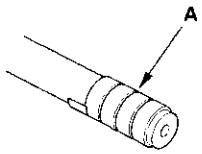

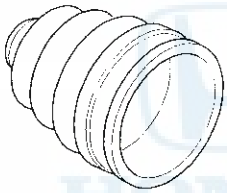

2. Install the inboard boot to the driveshaft, then remove the vinyl tape.Take care not to damage the inboard boot.

3. Install the spider (A) onto the driveshaft by aligning the marks (B) on the spider and the end of the driveshaft.

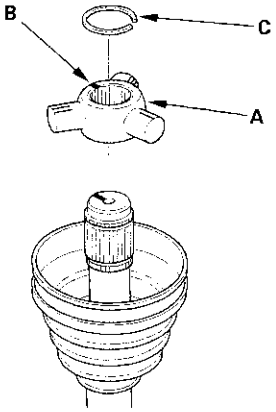

4. Fit the circlip (C) into the driveshaft groove. Always rotate the circlip in its groove to be sure it is fully seated.

5. Fit the rollers (A or B) onto the spider (C) with their high shoulders facing outward, and note these items:

   - Reinstall the rollers in their original positions on the spider by aligning the marks (D).
   - Hold the driveshaft pointed up to prevent the rollers from falling off.
   - Roller (A) is used on '98-00 A/T models and all '01 models.
   - Roller (B) is used on '98-00 M/T models.

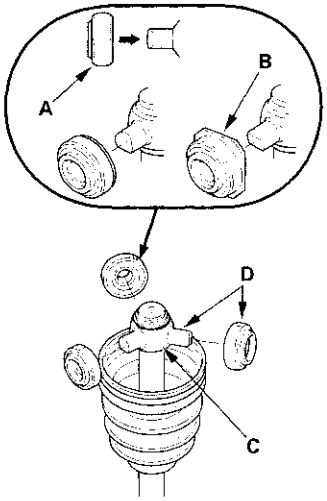

(cont'd)

Driveshafts Reassembly (cont'd)

6. Pack the inboard joint with the joint grease included in the new driveshaft set.

Grease quantity
Inboard joint: 120 – 130 g (4.2 – 4.6 oz) ('98-00 models)
150 – 160 g (5.3 – 5.6 oz) ('01 model)

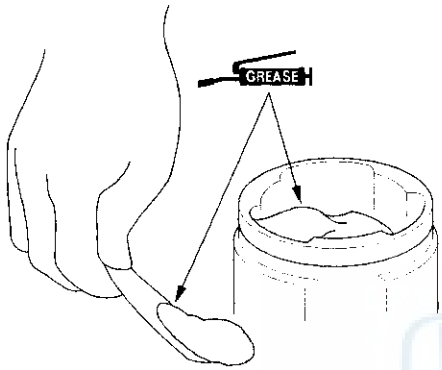

7. Fit the inboard joint onto the driveshaft, and note these items:

- Reinstall the inboard joint (A) onto the driveshaft by aligning the marks (B) on the inboard joint and the rollers.
- Hold the driveshaft so the inboard joint points up to prevent it from falling off.
- For M/T models, align the roller holders (C) with the grooves in the inboard joint ('98-00 models).

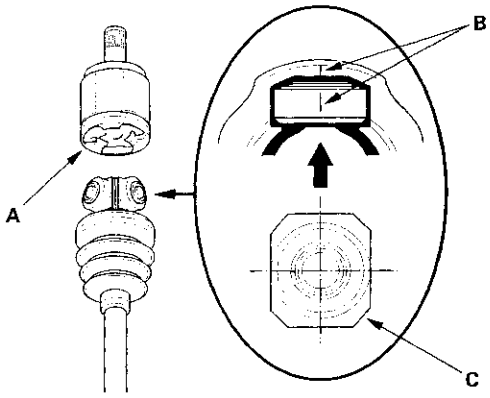

8. Adjust the length of the driveshafts to the figure below, then adjust the boots to halfway between full compression and full extension. Make sure the ends of the boots seat in the grooves of the driveshaft and joint.

Left driveshaft: 554 – 559 mm (21.8 – 22.0 in.)
Right driveshaft: 544 – 549 mm (21.4 – 21.6 in.)

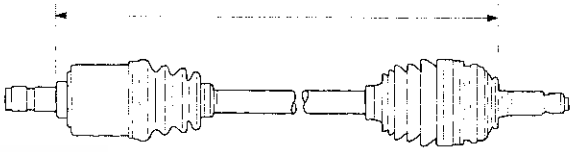

9. Install the boot bands.

- For the double loop type, go to step 13.
- For the low profile type, go to step 11.

10. Install the new low profile band (A) onto the boot (B) and dynamic damper, then hook the tab (C) of the band.

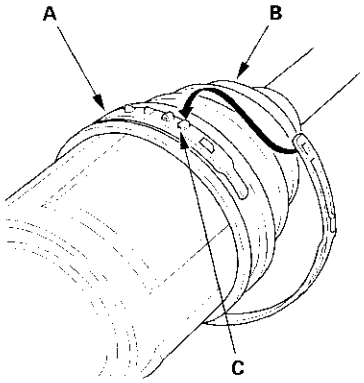

11. Close the hook portion of the band with a commercially available boot band pincers (A) then hook the tabs (B) of the band.

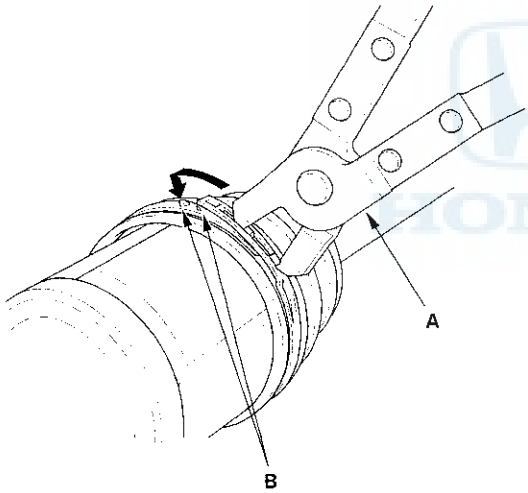

12. Fit the boot ends onto the driveshaft and the inboard joint, then install the band (A) onto the boot (B).

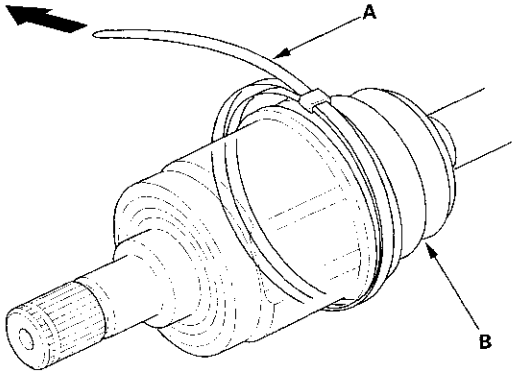

13. Pull up the slack in the band by hand.

14. Mark a position (A) on the band 10 – 14 mm (0.4 – 0.6 in.) from the clip (B).

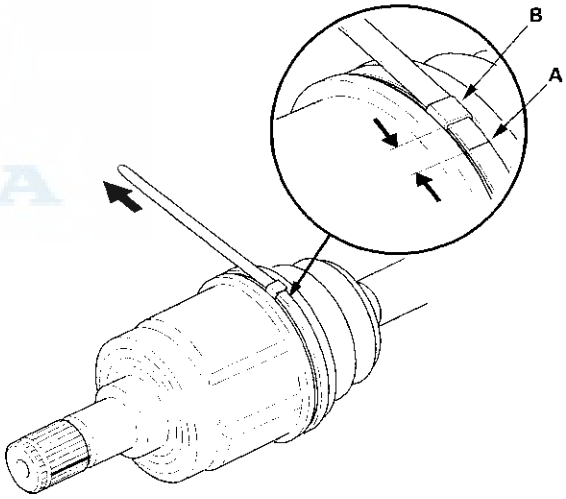

(cont'd)

Driveshafts Reassembly (cont'd)

15. Thread the free end of the band through the nose section of the commercially available boot band tool KD-3191 or equvialent (A), and into the slot on the winding mandrel (B).

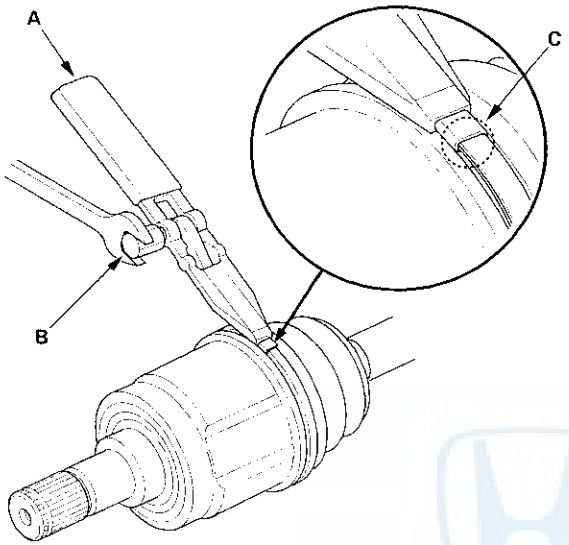

16. Place a wrench on the winding mandrel of the boot band tool, and tighten the band until the marked spot (C) on the band meets the edge of the clip.

17. Lift up the boot band tool to bend the free end of the band 90 degrees to the clip. Center punch the clip, then fold over the remaining tail onto the clip.

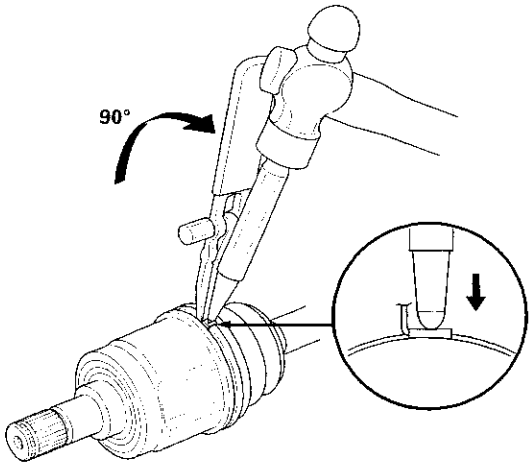

18. Unwind the boot band tool, and cut off the excess free end of the band to leave a 5 – 10 mm (0.2 – 0.4 in.) tail protruding from the clip.

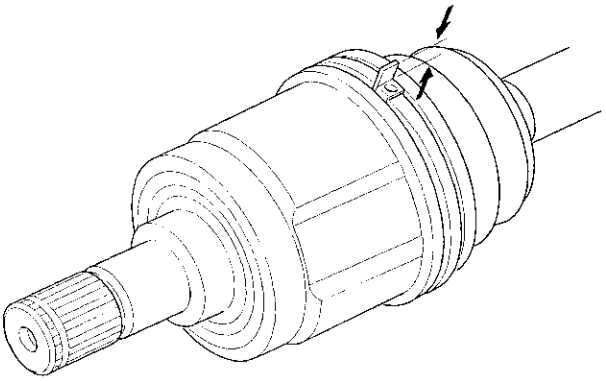

19. Bend the band end (A) by tapping it down with a hammer.

NOTE:
- Make sure the band and clip do not interfere with anything and the band does not move.
- Remove any grease remaining on the surrounding surfaces

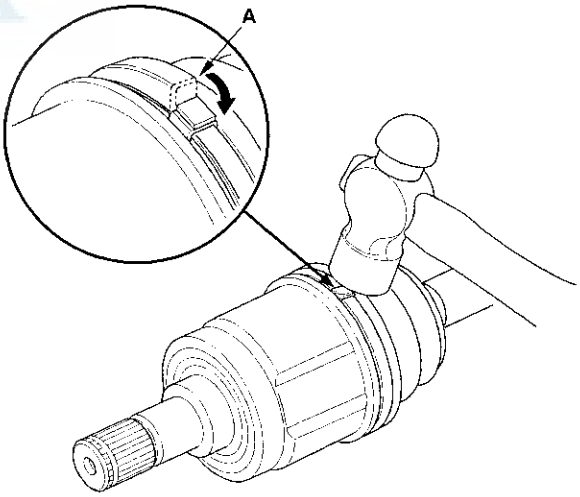

20. Install the new set ring.

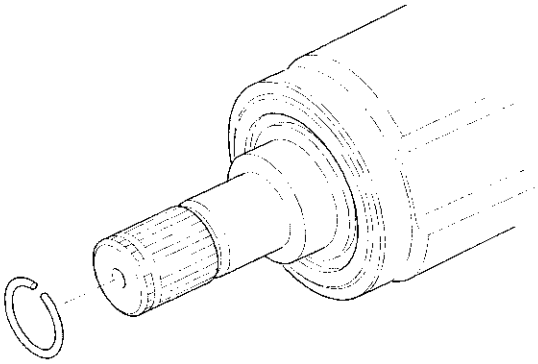

Outboard Joint Side:

1. Wrap the splines with vinyl tape (A) to prevent damage to the outboard boot.

Rubber type

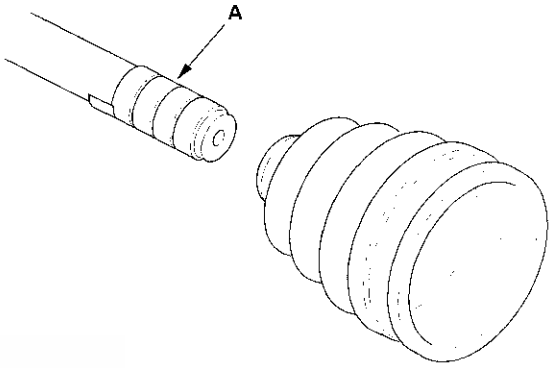

TPE type

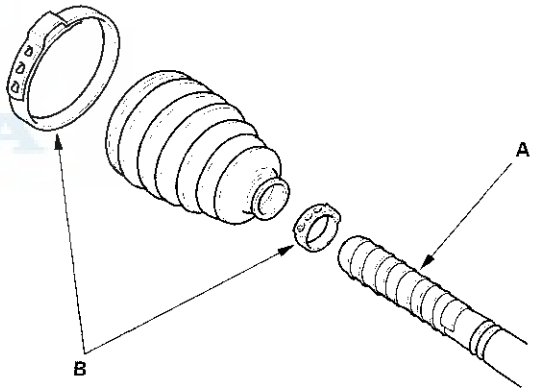

2. Install the new boot band (B) (TPE type).
3. Install the outboard boot. Take care not to damage the outboard boot.
4. Remove the vinyl tape.

(cont'd)

Driveshafts Reassembly (cont'd)

5. Install the new stop ring (A) into the driveshaft groove (B).

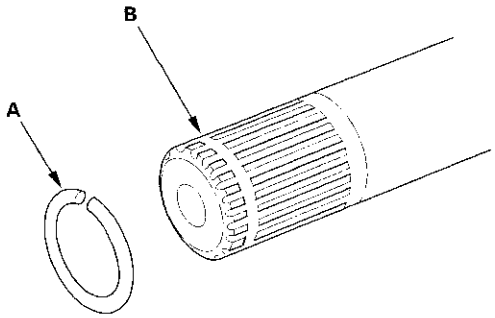

6. Insert the driveshaft (A) into the outboard joint (B) until the stop ring (C) is close on the joint.

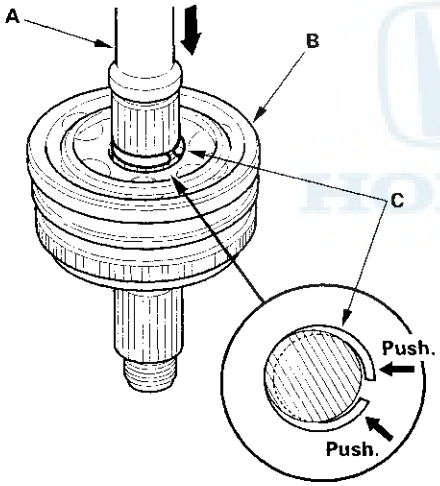

7. To completely seat the outboard joint, pick up the driveshaft and joint, and drop them from about 10 cm (4 in.) onto a hard surface. Do not use a hammer as excessive force may damage the driveshaft.

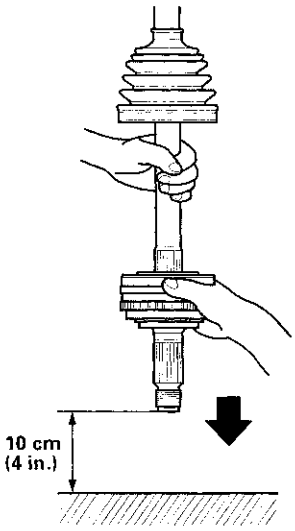

8. Check the alignment of the paint mark (A) with the outboard joint end (B).

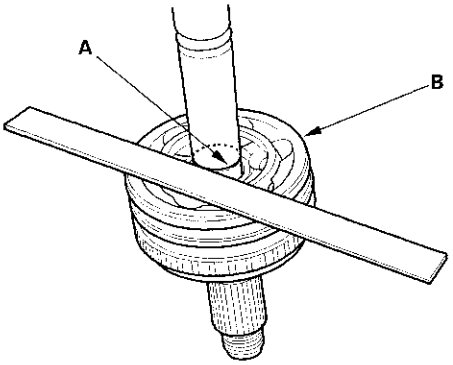

9. Pack the outboard joint with the joint grease included in the new joint boot set.

   Grease quantity
   Outboard joint (Rubber): 130 – 140 g (4.6 – 4.9 oz)
   Outboard joint (TPE): 140 – 150 g (4.9 – 5.3 oz)

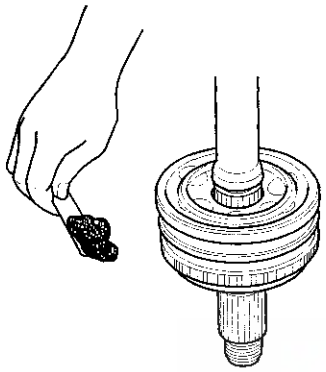

10. Install the outboard boot and boot bands.

    - For TPE type boot, go to step 20.
    - For rubber type boot, go to step 11.

11. Fit the boot (A) ends onto the driveshaft (B) and outboard joint (C).

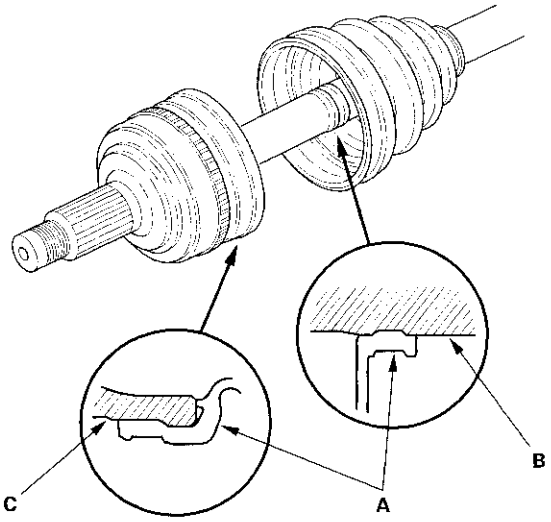

12. Set the new double loop band (A) onto the boot.

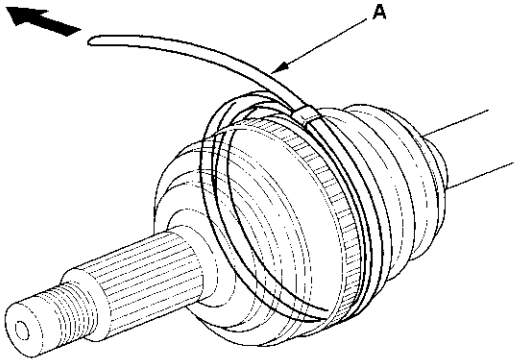

13. Pull up the slack in the band by hand.

14. Mark a position (A) on the band 10 – 14 mm (0.4 – 0.6 in.) from the clip (B).

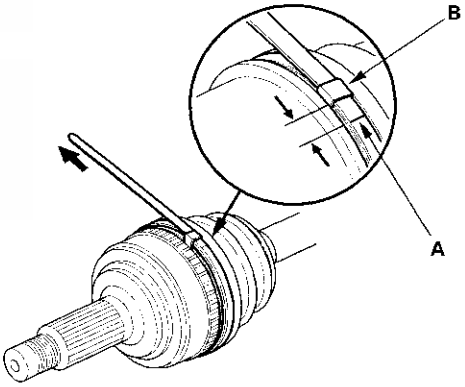

(cont'd)

Driveshafts Reassembly (cont'd)

15. Thread the free end of the band through the nose section of a commercially available boot band tool KD-3191 or equivalent (A), and into the slot on the winding mandrel (B).

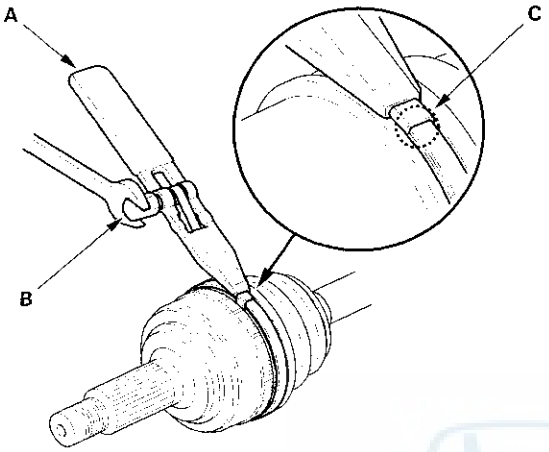

16. Place a wrench on the winding mandrel of the boot band tool, and tighten the band until the marked spot (C) on the band meets the edge of the clip.

17. Lift up the boot band tool to bend the free end of the band 90° to the clip. Center punch the clip, then fold over the remaining tail onto the clip.

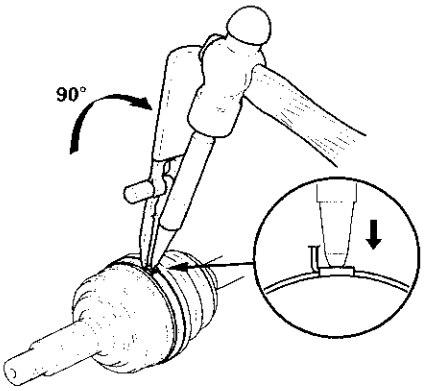

18. Unwind the boot band tool, and cut off the excess free end of the band to leave a 5 – 10 mm (0.2 – 0.4 in.) tail protruding from the clip.

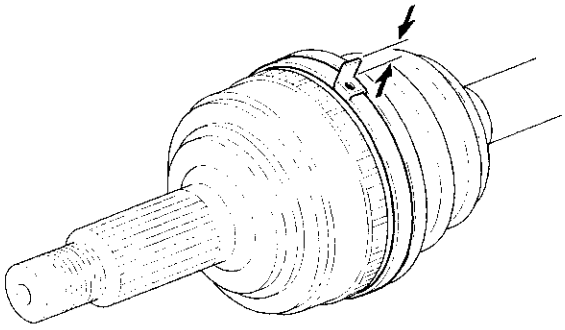

19. Bend the band end (A) by tapping it down with a hammer.

NOTE:
- Make sure the band and clip do not interfere with anything, and the band does not move.
- Remove any grease remaining on the surrounding surfaces.

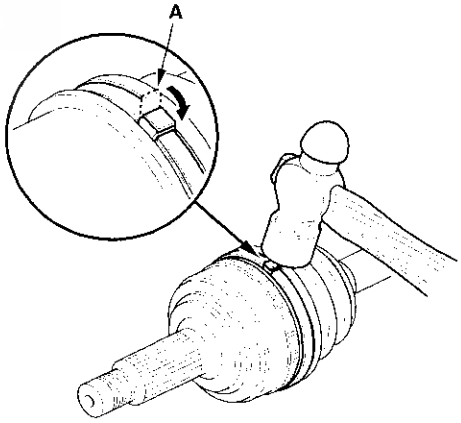

20. Fit the boot (A) ends onto the driveshaft (B) and outboard joint (C).

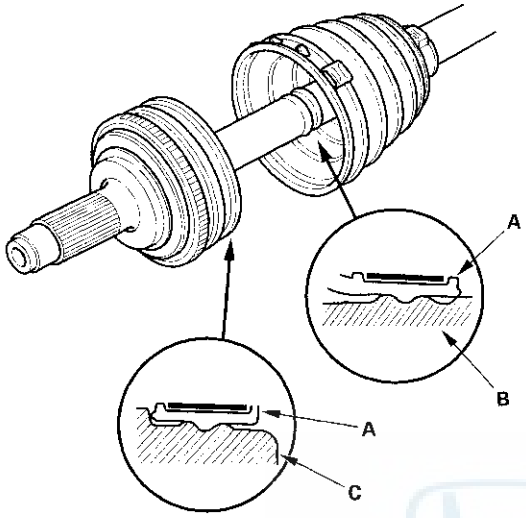

21. Close the ear portion (A) of the band with a commercially available boot band pincers (B).

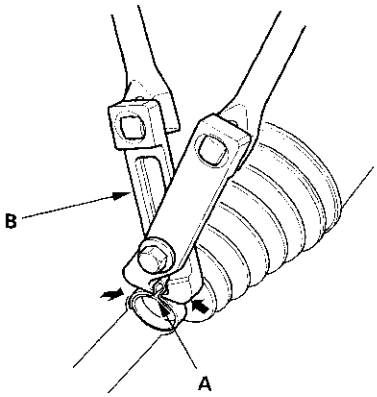

22. Check the clearance between the closed ear portion of the band. If the clearance is not within the standard, close the ear portion of the band further.

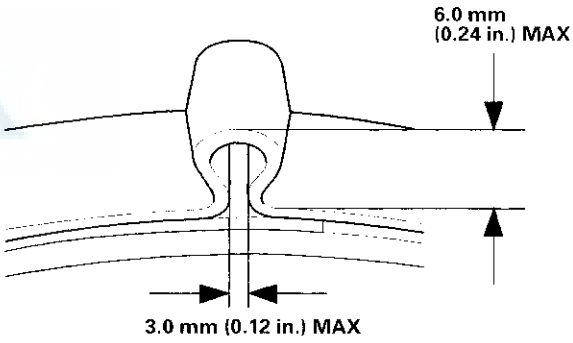

Intermediate Shaft Removal

1. Drain the ATF, refer to the '98-01 Accord Service Manual (see page 14-113).

2. Remove the left driveshaft; refer to the '98-01 Accord Service Manual (see page 16-3).

3. Remove the flange bolt (A) and 2 dowel bolts (B).

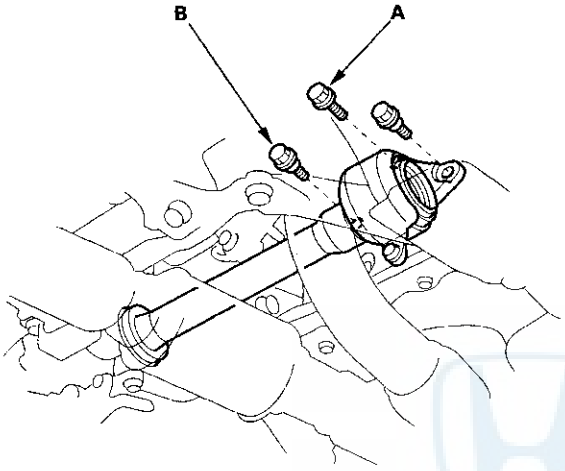

4. Remove the intermediate shaft (A) from the differential. Hold the intermediate shaft horizontal until it is clear of the differential to prevent damage to the differential oil seal (B).

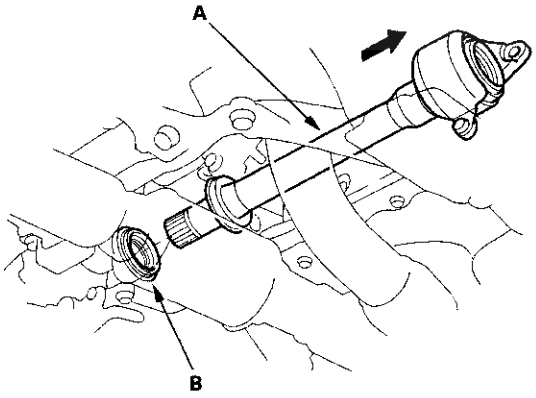

Intermediate Shaft Disassembly

Special Tools Required
- Driver 07749-0010000
- Driver attachment 07947-6340500
- Support base attachment 07LAF-SM40300
- Support base 07965-SD90100
- Attachment, 42 x 47 mm 07746-0010300

1. Remove the heat shield (A) and intermediate shaft outer seal (B) from the bearing support (C).

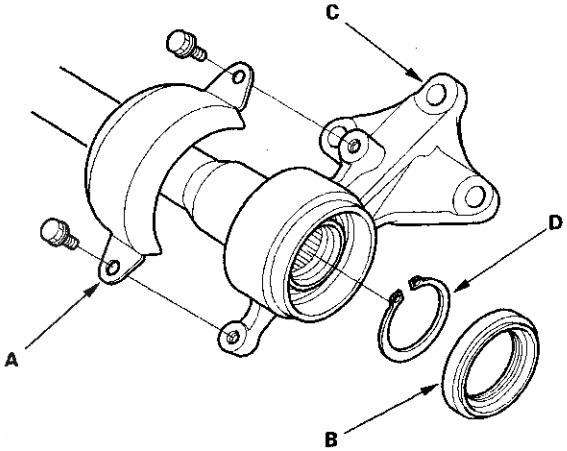

2. Remove the external snap ring (D).

3. Press the intermediate shaft (A) out of the intermediate shaft bearing (B) using the special tools and a press. Be careful not to damage the metal rings (C) on the intermediate shaft during disassembly.

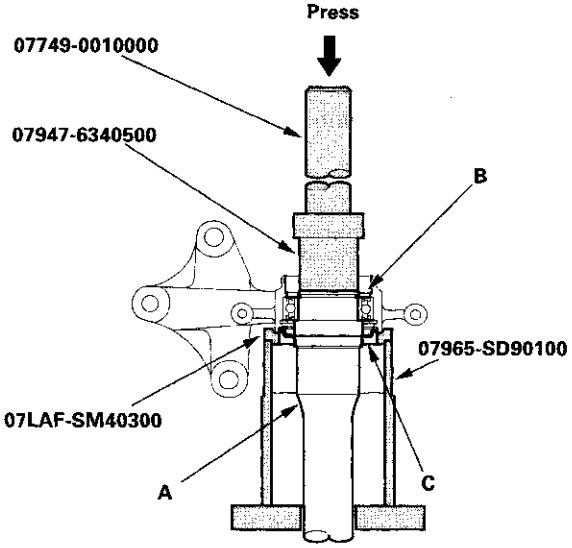

4. Remove the internal snap ring.

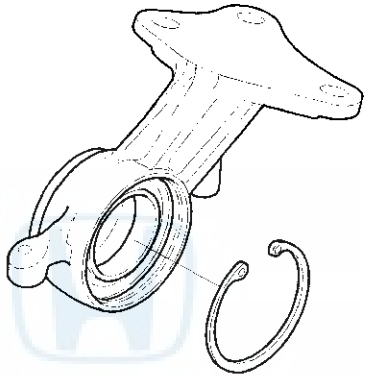

5. Press the intermediate shaft bearing (A) out of the bearing support (B) using the special tools and a press.

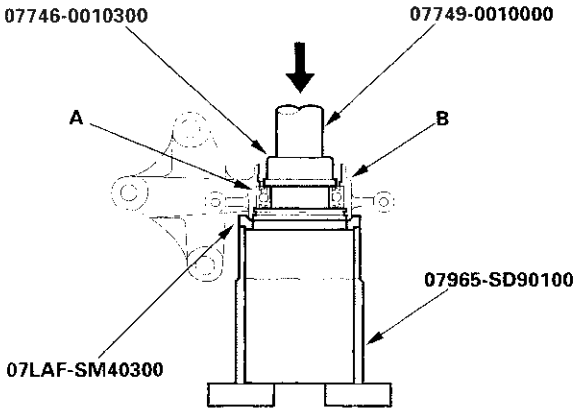

Intermediate Shaft Reassembly

Exploded View

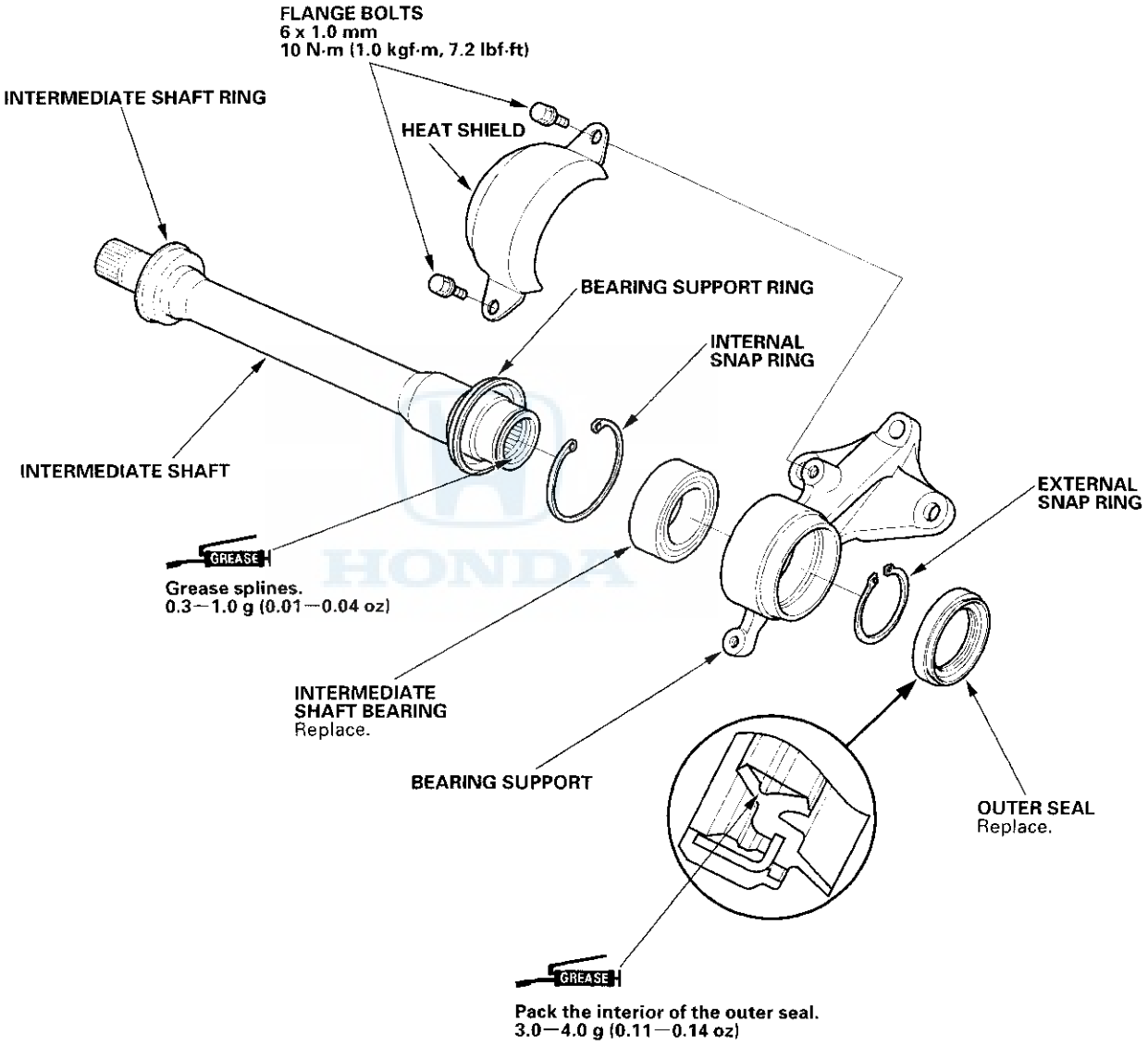

Special Tools Required
- Driver 07749-0010000
- Support base attachment 07LAF-SM40300
- Support base 07965-SD90100
- Oil seal driver attachment 07947-SD90101
- Fork seal driver, 39.2 x 49.5 x15 mm 07947-4630100

NOTE: Refer to the Exploded View as needed during this procedure.

1. Clean the disassembled parts with solvent, and dry them with compressed air. Do not wash the rubber parts with solvent.

2. Press the intermediate shaft bearing (A) into the bearing support (B) using the special tools and a press.

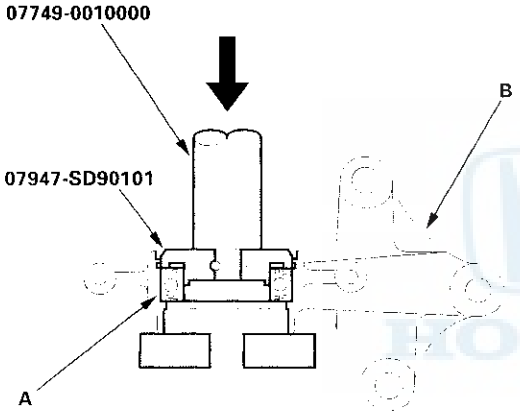

3. Seat the internal snap ring in the groove of the bearing support.

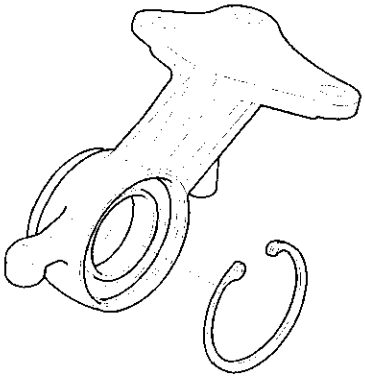

4. Press the intermediate shaft (A) into the shaft bearing using the special tool and a press.

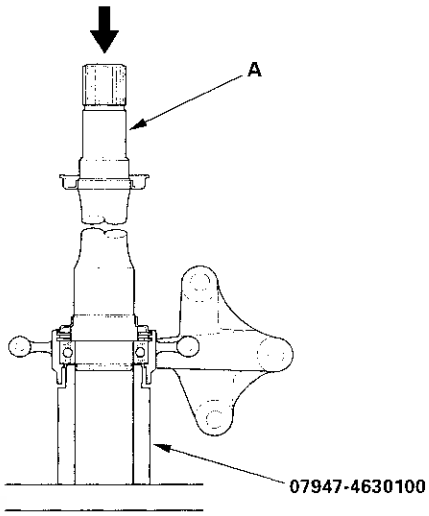

5. Seat the external snap ring (A) into the groove of the intermediate shaft (B).

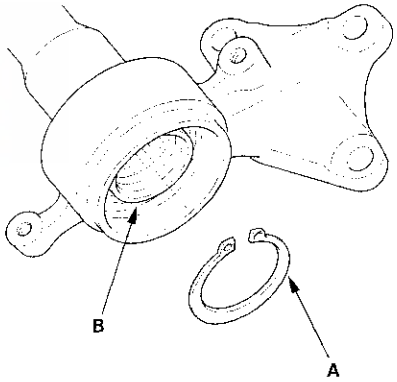

(cont'd)

Intermediate Shaft Reassembly (cont'd)

6. Pack the interior of the outer seal (A). Install the outer seal into the bearing support (B) using the special tools and a press.

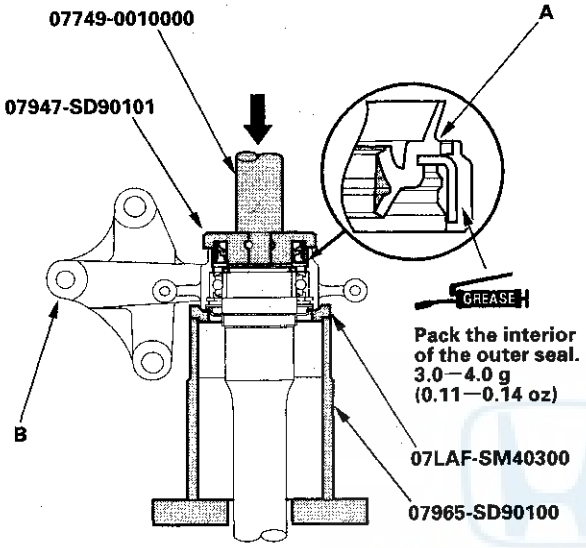

7. Install the heat shield onto the bearing support.

Intermediate Shaft Installation

1. Clean the areas where the intermediate shaft (A) contacts the transmission (differential) thoroughly with solvent or carburetor cleaner, and dry with compressed air. Insert the intermediate shaft assembly into the differential. Hold the intermediate shaft horizontal to prevent damage to the differential oil seal (B).

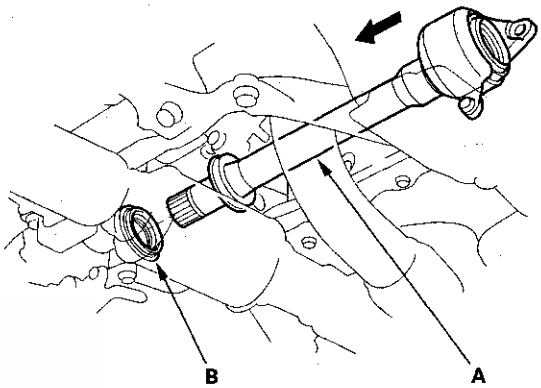

2. Install the flange bolt (A) and 2 dowel bolts (B).

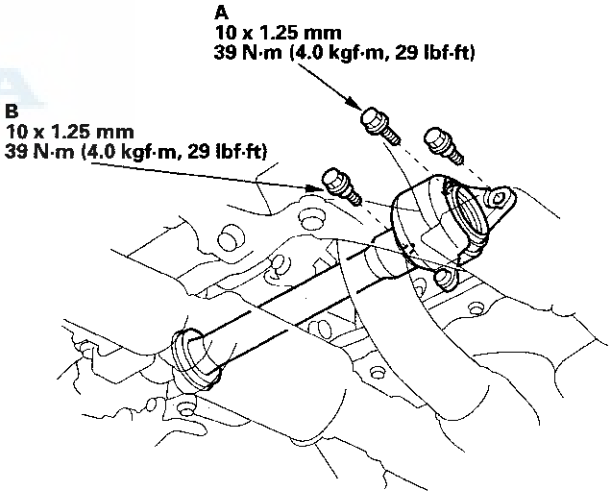

3. Refill the transmisson with recommended ATF, refer to the '98-01 Accord Service Manual (see page 14-113).

Steering

Power Steering

NOTE: Refer to the 1998—2001 Accord Service Manual, P/N 61S8008 for items not shown in this section.

Outline of V6 Model Changes

The Steering System has been changed to suit the V6 engine.

Special Tools

Ref.No.	Tool Number	Description	Qty
①	07LAG-SM40100 or 07LAG-SM4010A	Piston Seal Ring Guide	1
②	07LAG-SM40200 or 07LAG-SM4020A	Piston Seal Ring Sizing Tool	1
*③	07JGG-001010A	Belt Tension Gauge	1
④	07TAF-SZ50100	Cylinder End Seal Remover Attachment	1
⑤	07RAK-S040122	P/S Joint Adaptor (Hose)	1
⑥	07VAK-P8A011A	P/S Joint Adaptor (Pump)	1
⑦	07VAK-P8A012B	P/S Joint Adaptor Plate (Pump)	1
⑧	07406-0010001 or 07406-001000A	P/S Pressure Gauge	1
⑨	07746-0010300	Attachment, 42 x 47 mm	1
⑩	07749-0010000	Driver	1

*Included in the Belt Tension Gauge Set, 07TGG－001000A.

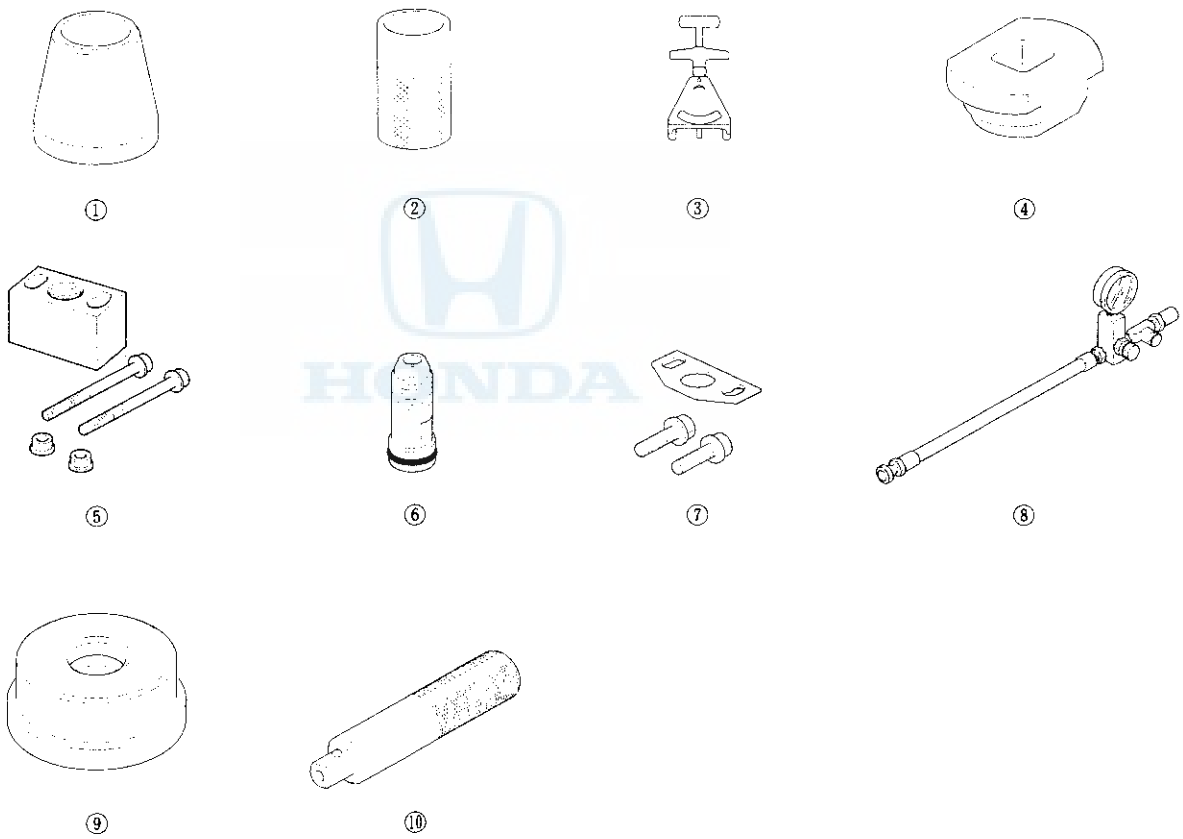

Component Location Index

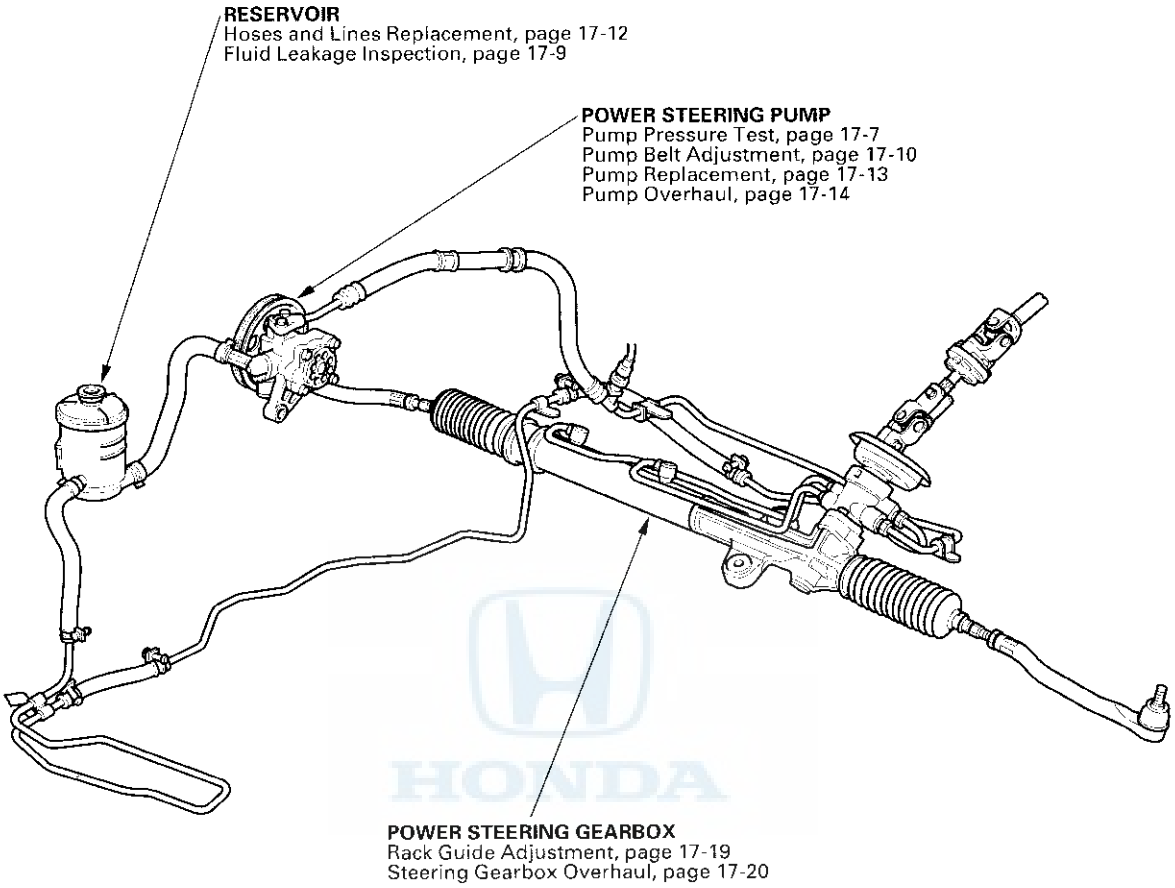

Symptom Troubleshooting Index

Find the symptom in the chart below, and do the related procedures in the order listed until you find the cause.

Symptom	Procedure(s)	Also check for:
Hard Steering	Troubleshoot the system (see page 17-6).	• Modified suspension • Tire sizes, tire varieties, and air pressure • Power steering pump belt adjustment
Assist (excessively light steering at high speed)	Check the rack guide adjustment (see page 17-19).	Front wheel alignment; refer to the '98-01 Accord Service Manual (see page 18-5).
Shock or vibration when the wheel is turned to full lock	1. Check the rack guide adjustment (see page 17-19). 2. Check the power steering pump belt for slippage and adjust as necessary (see page 17-10). 3. Replace the steering gearbox; refer to the '98-01 Accord Service Manual (see page 17-30).	
Steering wheel will not return smoothly	1. Check cylinder lines A and B for deformation. 2. Check wheel alignment; refer to the '98-00 Accord Service Manual (see page 18-5). 3. Replace the steering gearbox; refer to the '98-99 Accord Service Manual (see page 17-30).	
Uneven or rough steering	1. Check the rack guide adjustment (see page 17-19). 2. Check power steering pump belt adjustment (see page 17-10). 3. Check for low or erratic engine idle speed (see page 11-86). 4. Check for air in the power steering system due to low fluid level. 5. Check for low fluid level in the power steering reservoir due to possible leaks in system. 6. Replace the steering gearbox; refer to the '98-01 Accord Service Manual (see page 17-30).	
Steering wheel kicks back during wide turns	1. Check power steering pump belt adjustment (see page 17-10). 2. Check the power steering pump fluid pressure with T/N 07406-0010001 (see page 17-7), with T/N 07406-001000A (see page 17-8).	
Humming	1. Check when the noise occurs • If the noise happens 2—3 minutes after starting the engine in cold weather, this is normal. • If the noise happens when the wheel is turn with the vehicle stopped, this is normal due to the fluid pulsation. 2. Check for the high-pressure hose touching the sub-frame or body. 3. Check for automatic transmission convertor noise. Remove the power steering belt, and recheck.	

Rattle or chattering	1. Check for loose steering components (tie-rod and ball joints). Tighten or replace as necessary. 2. Check the steering column shaft for wobbling. If the steering columns wobbles, replace the steering column assembly, refer to the '98-'01 Accord Service Manual (see page 17-25). 3. Check the rack guide adjustment (see page 17-19). 4. Check the power steering pump pulley. • If the pulley is loose, tighten it (see page 17-14). • If the pump shaft is loose, replace the pump (see page 17-13).	
Hissing	• Check the fluid level. If low, fill the reservoir to the proper level and check for leaks. • Check the reservoir for leaks. • Check for crushed inlet hose or loose hose clamp allowing air into the suction side of the system. • Check the power steering pump shaft oil seal for leaks.	
Pump noise	• Compare the pump noise at normal operating temperature to another vehicle, (pump noise up to 2 - 3 minutes after starting the engine in cold weather is normal). • Remove and inspect the pump for wear and damage (see step 1 on page 17-15).	
Squeaking	Check the power steering belt tension and adjust as necessary (see page 17-10).	
Fluid Leaks from the steering gearbox	• Fluid leaks from the top of the valve body unit: Replace the valve body unit. • Fluid leaks from the left tie-rod boot: Replace the valve oil seal on the pinion shaft. Replace the cylinder end seal on the gearbox side. • Fluid leaks from the right tie-rod boot: Replace the cylinder end seal. • Fluid leaks from pinion shaft near the lower steering joint bolt: Replace the valve body unit.	
Fluid leaks from line	• Fluid leaks from the cylinder line A or B connections (flare nuts): Tighten the connection and retest. If it still leaks, replace the fitting O-rings. • Fluid leaks from a damaged cylinder line A or B: Replace the cylinder line. • Fluid leaks from the pump outlet hose or return line fitting on the valve body unit (flair nuts): Tighten the fitting and retest. If it still leaks, replace the hose, the line, or valve body unit as necessary.	
Fluid leaks from pump	• Fluid leaks from the front oil seal: Replace the front oil seal. • Fluid leaks from the power steering pump housing: Replace the leaking O-rings or seals (see page 17-14), and if necessary replace (see page 17-13)	
Fluid leaks from reservoir	• Fluid leaks from around the reservoir cap: Fluid level is too high: drain the reservoir to the proper level. Aerated fluid: check for an air leak on the inlet side of pump. • Fluid leaks from reservoir: Check for the reservoir for cracks and replace as necessary.	
Fluid leaks from pump outlet hose (high-pressure)	• Check the fitting for loose bolts. If the bolts are tight, replace the fitting O-ring. • Fluid leaks at the swagged joint: Replace the outlet hose.	
Fluid leaks from pump inlet hose (low-pressure)	Check the hose for damage, deterioration, or improper assembly. Replace or repair as necessary.	

Symptom Troubleshooting

Hard Steering

1. Check the power assist, refer to the '98-01 Accord Service Manual (see page 17-7).

   Is the power assist more than 29 N (3.0 kgf, 6.6 lbf)?

   YES—Go to step 2.

   NO—Power assist is OK.■

2. Measure steady-state fluid pressure from the pump at idle with T/N 07406-0010001 (see page 17-7) or with T/N 07406-001000A (see page 17-8).

   Is the pressure 1,500 kPa (15 kgf/cm², 213 psi) or less?

   YES—Go to step 3.

   NO—Go to step 7.

3. Measure the pump relief pressure at idle with T/N 07406-0010001 (see page 17-7) or with T/N 07406-001000A (see page 17-8).

   Is the pressure 7,600—8,300 kPa (78—85 kgf/cm 2, 1,100—1,210 psi) or less?

   YES—Go to step 4.

   NO—Go to step 8.

4. With a spring scale, measure the power assist in both directions, to the left and to the right.

   Are the two measurements within 5.0 N (0.51 kgf, 1.12 lbf) of each other?

   YES—Go to step 5.

   NO—Go to step 9.

5. Measure the fluid pressure with T/N 07406-0010001 (see page 17-7) or with T/N 07406-001000A (see page 17-8) with both pressure gauge valves open (if so equipped), wheel turning the steering wheel fully to the left and fully to the right.

   Is the pressure 7,600—8,300 kPa (78—85 kgf/cm², 1,100—1,210 psi) or less?

   YES—Go to step 6.

   NO—Faulty gearbox.■

6. Adjust the rack guide (see page 17-19), and retest.

   Is the steering OK?

   YES—Repair is completed.■

   NO—Faulty gearbox.■

7. Check for feed and return lines between the pump and the gearbox for clogging and deformation.

   Are the lines clogged or deformed?

   YES—Repair or replace the lines.■

   NO—Faulty valve body unit.■

8. Check the flow control valve, refer to the '98-01 Accord Service Manual (see page 17-17) for smooth movement and leaks.

   Is the flow control valve OK?

   YES—Faulty pump assembly.■

   NO—Faulty flow control valve.■

9. Check the cylinder lines A and B for deformation (see page 17-12).

   Are the A or B lines deformed?

   YES—Replace the lines.■

   NO—Go to step 10.

10. Check for a bent rack shaft or misadjusted rack guide (to tight).

    Is the rack shaft bent or the rack guide adjusted too tight?

    YES—Replace the rack shaft or readjust the rack guide.■

    NO—Faulty valve body unit.■

Pump Pressure Test with T/N 07406-0010001

Special Tools Required
- P/S joint adapter (pump), 07VAK-P8A011A
- P/S joint adapter plate (pump), 07VAK-P8A012B
- P/S joint adapter (hose), 07RAK-S040122
- P/S pressure gauge, 07406-0010001

Check the fluid pressure as follows to determine whether the trouble is in the pump or gearbox.

1. Check the power steering fluid level; refer to the '98-01 Accord Service Manual (see page 17-14) and pump belt tension (see page 17-10).

2. Disconnect the pump outlet hose (A) from the pump outlet with care so as not to spill the power steering fluid on the frame and other parts, then install the P/S joint adapter (pump) on the pump outlet (B) with the P/S joint outlet plate.

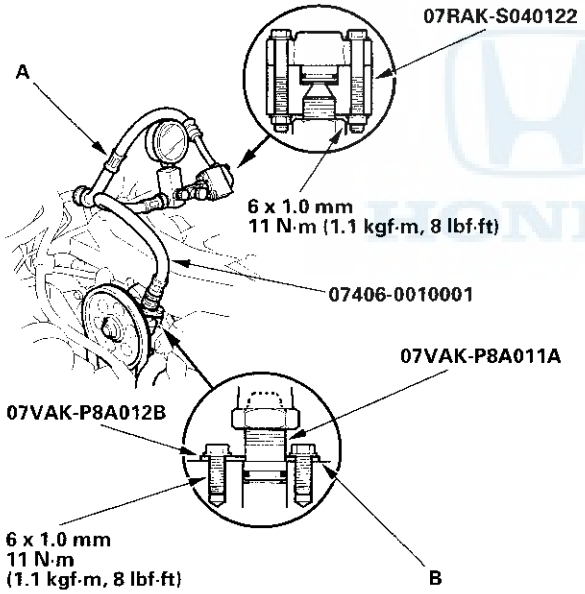

3. Connect the P/S joint adapter (hose) to the P/S pressure gauge, then connect the pump outlet hose (A) to the P/S joint adapter (hose).

4. Install the P/S pressure gauge to the P/S joint adapter (pump).

5. Fully open the shut-off valve (A).

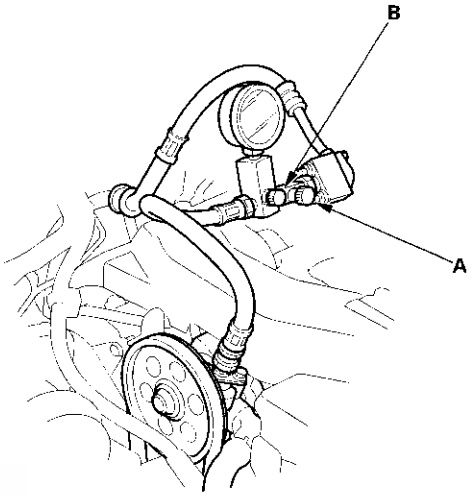

6. Fully open the pressure control valve (B).

7. Start the engine and let it idle.

8. Turn the steering wheel from lock-to-lock several times to warm the fluid to operating temperature.

9. Measure steady-state fluid pressure while the engine is idling. If the pump is in good condition, the gauge should read less than 1,500 kPa (15 kgf/cm^2, 213 psi). If it reads high, check the outlet hose or valve body unit (see Steering System Troubleshooting).

10. Close the pressure control valve, then close the shut-off valve gradually until the pressure gauge needle is stable. Read the pressure.

NOTICE
Do not keep the pressure control valve closed more than 5 seconds or the pump could be damaged by over-heating.

11. Immediately open the pressure control valve fully. If the pump is in good condition, the gauge should read at least 7,600 – 8,300 kPa (78 – 85 kgf/cm^2, 1,110 – 1,210 psi). A low reading means pump output is too low for full assist. Repair or replace the pump.

Pump Pressure Test with T/N 07406-001000A

Special Tools Required
- P/S joint adapter (pump), 07VAK-P8A011A
- P/S joint adapter plate (pump), 07VAK-P8A012B
- P/S joint adapter (hose), 07RAK-S040122
- P/S pressure gauge, 07406-001000A

Check the fluid pressure as follows to determine whether the trouble is in the pump or gearbox.

1. Check the power steering fluid level; refer to the '98-01 Accord Service Manual (see page 17-14) and pump belt tension (see page 17-10).

2. Disconnect the pump outlet hose (A) from the pump outlet with care so as not to spill the power steering fluid on the frame and other parts, then install the P/S joint adapter (pump) on the pump outlet (B) with the P/S joint outlet plate.

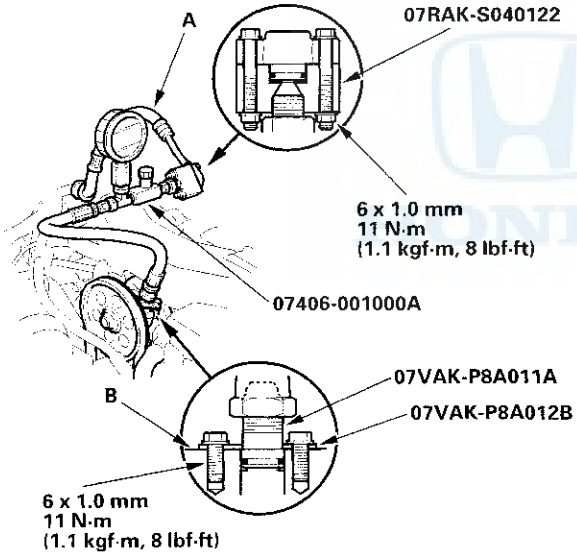

3. Connect the P/S joint adapter (hose) to the P/S pressure gauge, then connect the pump outlet hose (A) to the P/S joint adapter (hose).

4. Install the P/S pressure gauge to the P/S joint adapter (pump).

5. Open the pressure control valve (A) fully.

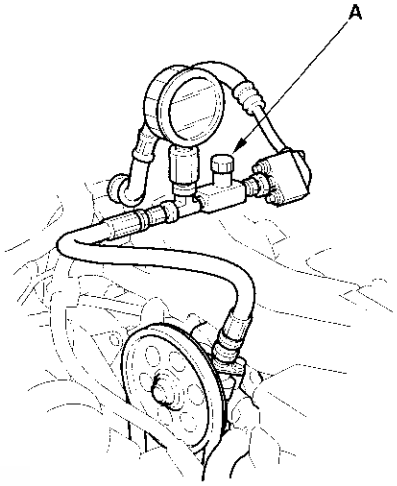

6. Start the engine and let it idle.

7. Turn the steering wheel from lock-to-lock several times to warm the fluid to operating temperature.

8. Measure steady-state fluid pressure while the engine is idling. If the pump is in good condition, the gauge should read less than 1,500 kPa (15 kgf/cm², 213 psi). If it reads high, check the outlet hose or valve body unit (see Steering System Troubleshooting).

9. Close the pressure control valve gradually and read the pressure.

NOTICE
Do not keep the pressure control valve closed more than 5 seconds or the pump could be damaged by over-heating.

10. Immediatery open the pressure control valve fully. If the pump is in good condition, the gauge should read at least 7,600 – 8,300 kPa (78 85 kgf/cm², 1,110 – 1,210 psi). A low reading means pump output is too low for full assist. Repair or replace the pump.

Fluid Leakage Inspection

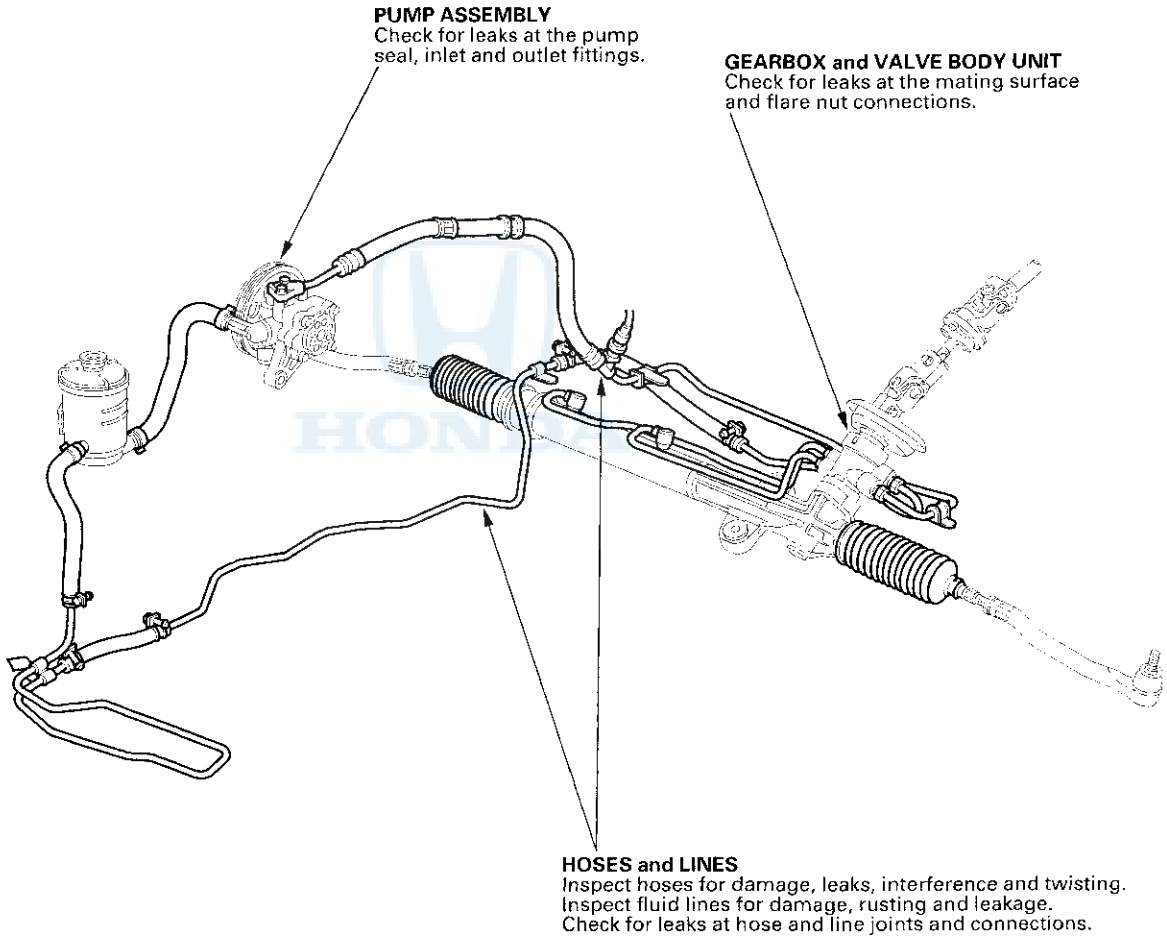

Pump Belt Inspection and Adjustment

Special Tools Required
Belt tension gauge set, 07JGG-001000A or
Belt tension gauge, 07JGG-001010A

Belt Tension Gauge Method

Inspection

1. Attach the belt tension gauge to the belt with the gauge face toward the engine, and measure the tension of the belt. Follow the manufacture's instructions. If the belt is worn or damaged, replace it.

   NOTE: Remove the belt tension gauge carefully to avoid hitting the gauge reset lever.

   Tension:
   Used Belt: 390 – 540 N (40 – 55 kgf, 88 – 121 lbf)
   New Belt: 740 – 880 N (75 – 90 kgf, 165 – 198 lbf)

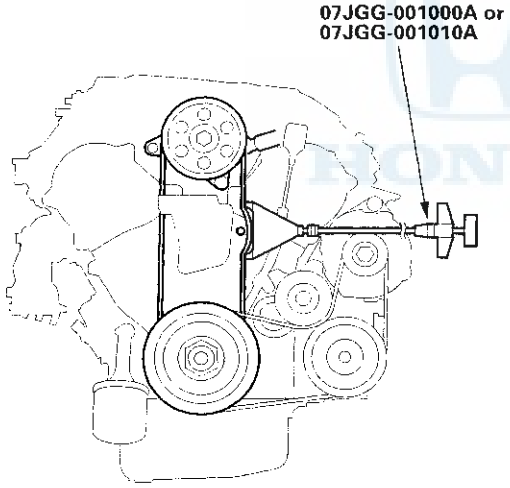

2. If you installed a new belt, run the engine for 5 minutes, then readjust the belt to the used belt specifications.

Adjustment

3. Loosen the power steering pump mounting nut (A) and bolt (B).

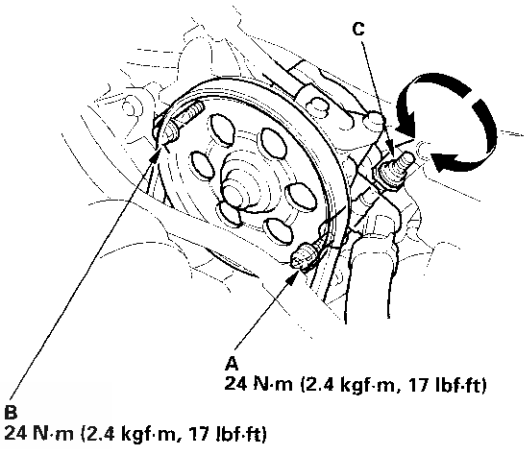

4. Turn the adjusting nut (C) to get the proper belt tension, then retighten the mounting nut and bolt.

5. Start the engine and turn the steering wheel from lock-to-lock several times, then stop the engine and recheck the tension of the belt.

Deflection Method

Inspection

1. Apply a force of 98 N (10 kgf, 22 lbf) and measure the deflection between the power steering pump pulley (A) and the crankshaft pulley (B).

   Deflection:
   Used Belt: 13.0 – 16.5 mm (0.51 – 0.65 in.)
   New Belt: 8.5 – 11.0 mm (0.33 – 0.45 in.)

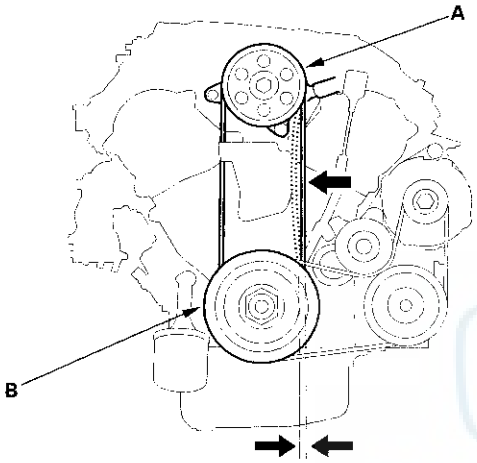

2. If you installed a new belt, run the engine for 5 minutes, then readjust the belt to the used belt specifications.

Adjustment

3. Loosen the power steering pump mounting nut (A) and bolt (B).

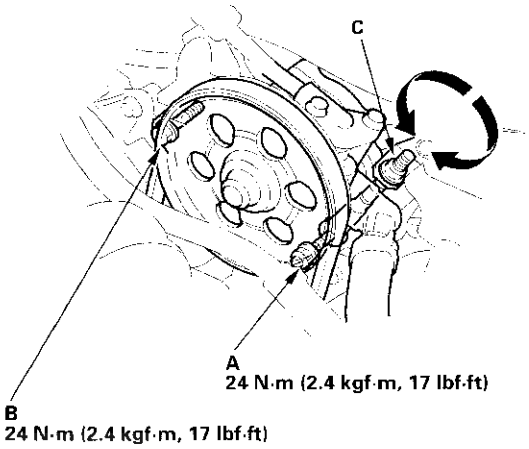

4. Turn the adjusting nut (C) to get the proper belt tension, then retighten the mounting nut and bolt.

5. Start the engine and turn the steering wheel from lock-to-lock several times, then stop the engine and recheck the tension of the belt.

Hoses and Lines Replacement

Note these items during installation:

- Connect each hose to the corresponding line securely until it contacts the stop on the line. Install the clamp or adjustable clamp at the specified distance from the hose end as shown.
- Check all clamps for deterioration or deformation; replace with the clamps new ones if necessary.
- Add the recommended power steering fluid to the specified level on the reservoir and check for leaks.

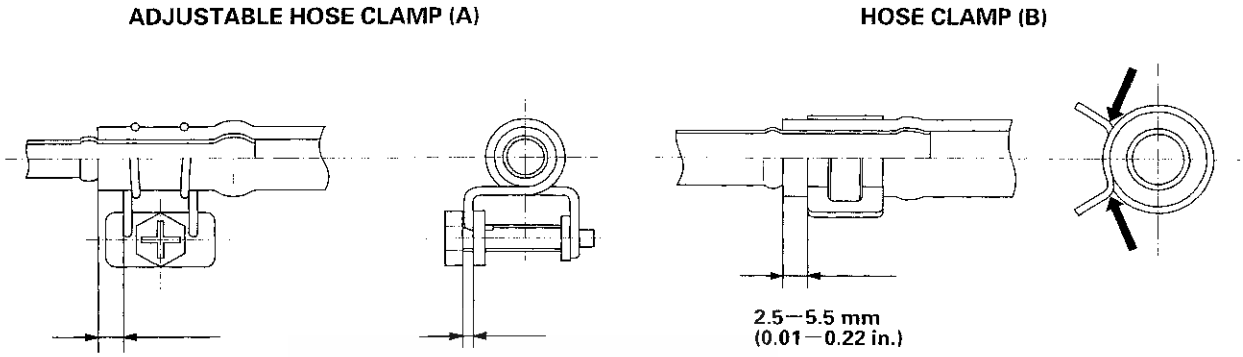

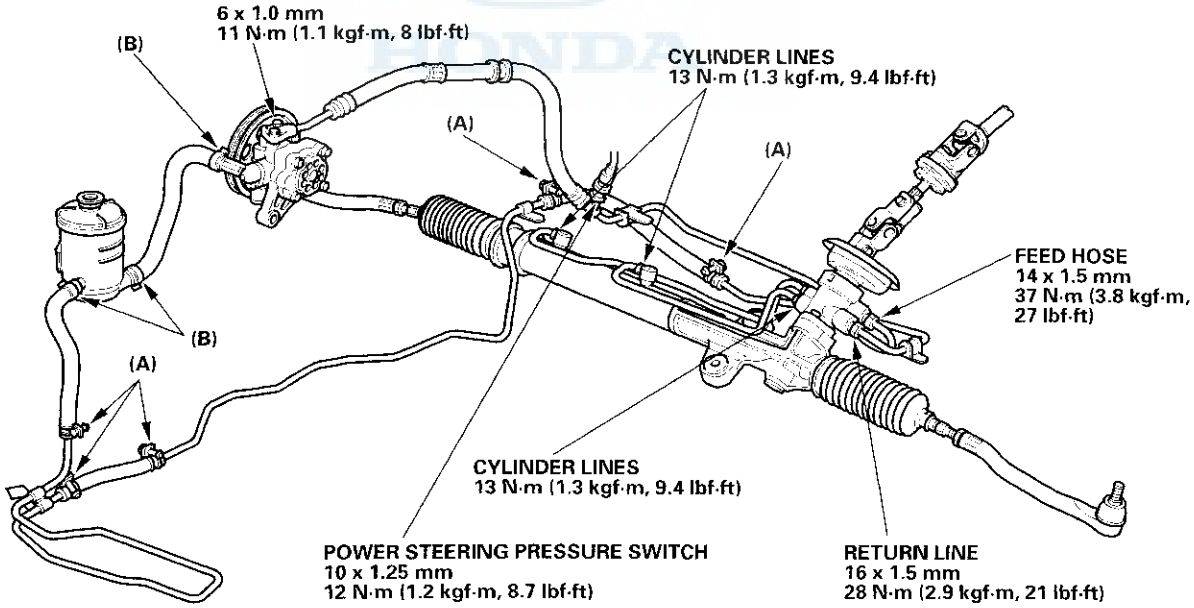

Pump Replacement

1. Place a suitable container under the vehicle.

2. Drain the power steering fluid from the reservoir.

3. Remove the intake manifold cover.

4. Cover the crankshaft pulley with several shop towels to protect if from spilled power steering fluid. Disconnect the pump inlet hose (A) and pump outlet hose (B) from the pump (C), and plug them. Take care not to spill the fluid on the body or parts. Wipe off any spilled fluid at once.

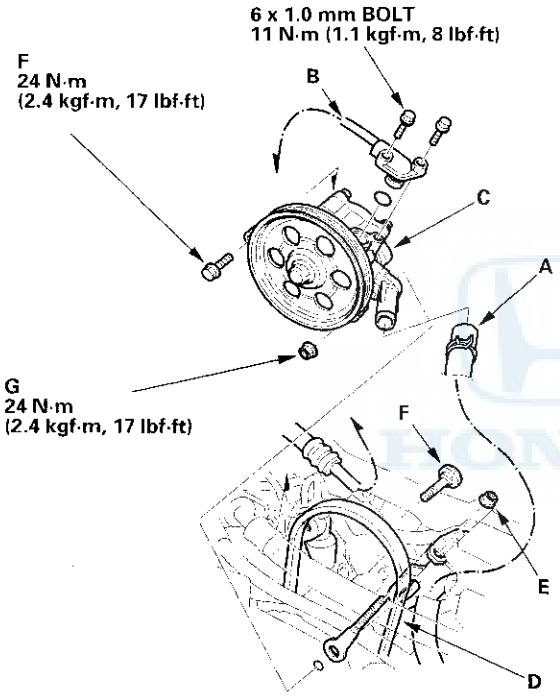

5. Remove the belt (D) by loosening the pump adjusting nut (E), then remove pump mounting bolts (F), nut (G) and pump. Do not turn the steering wheel with pump removed.

6. Connect the pump outlet hose and inlet hose. Tighten the pump fittings securely.

7. Loosely install the pump in the pump bracket with the mounting bolts and nut.

8. Install the pump belt (A) on the pulley (B).

   Note these items during belt installation:
   - Make sure that the power steering belt is properly positioned on the pulleys.
   - Do not get the power steering fluid or grease on the belt or pulley faces. Clean off any fluid or grease before installation.

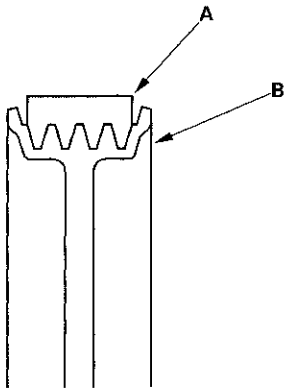

9. Adjust the pump belt adjustment (see page 17-10).

10. Fill the reservoir to the upper level line; refer to the '98-01 Accord Service Manual (see page 17-14).

Pump Overhaul

Exploded View

Replace the pump as an assembly if the parts indicated with asterisk (*) are worn or damaged.

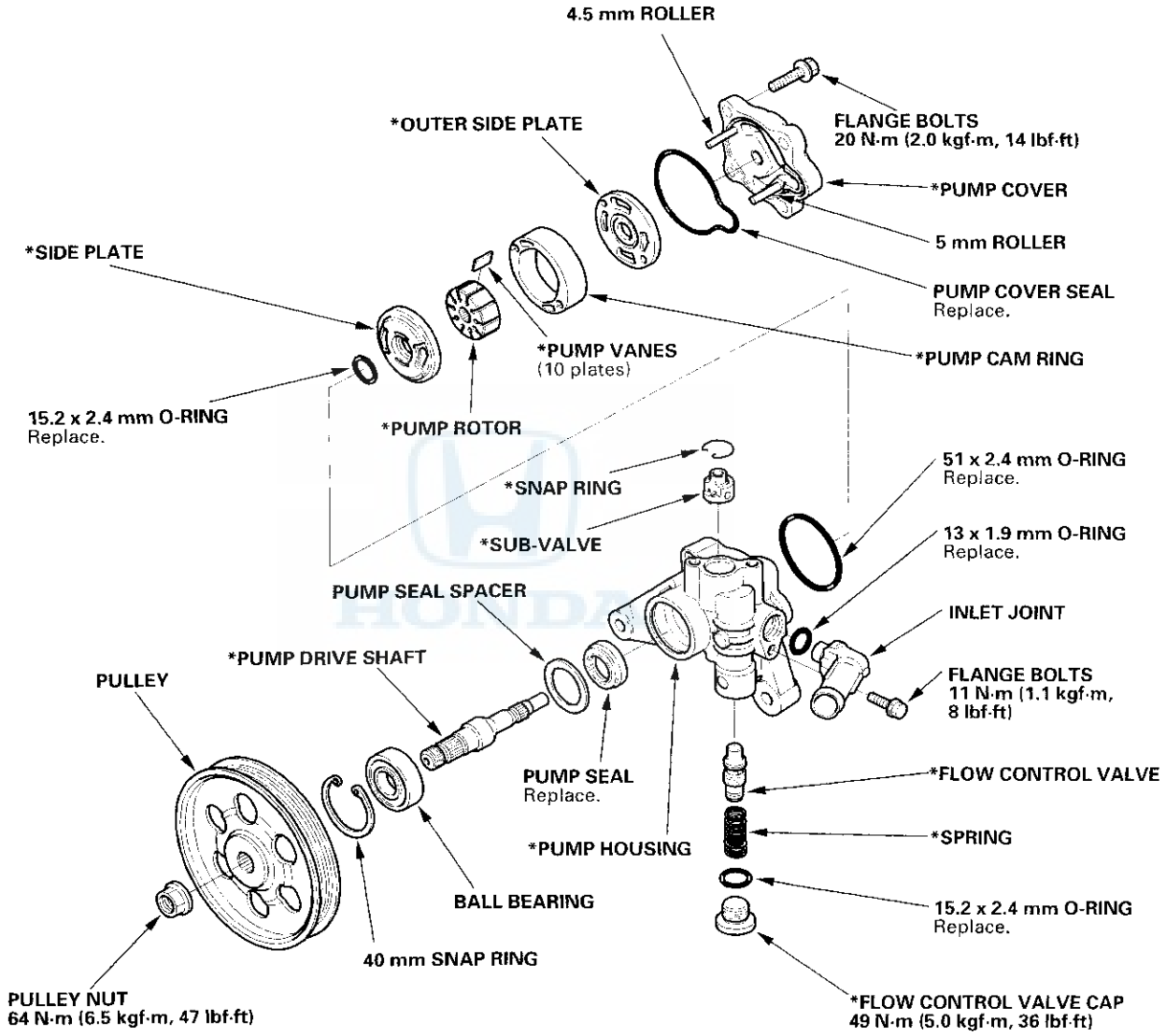

Special Tools Required
Universal holder, 07725-0030000

Disassembly

NOTE: Refer to the Exploded View as needed during the following procedure.

1. Remove the power steering pump (see page 17-13).

2. Drain the fluid from the pump.

3. Hold the steering pump (A) in a vise with soft jaws, hold the pulley (B) with the special tool, and remove the pulley nut (C) and pulley. Be careful not to damage the pump housing with the jaws of the vise.

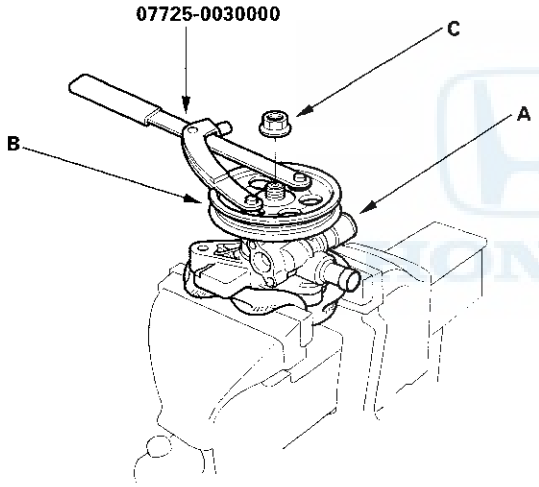

4. Loosen the flow control valve cap with a hex wrench, and remove it and the O-ring, flow control valve, and spring.

5. Remove the pump cover and pump cover seal.

6. Remove the outer side plate, pump cam ring, pump rotor, pump vanes, side plate, and O-rings.

7. Remove the snap ring, then remove the sub-valve from the pump housing.

8. Remove the circlip, then remove the pump drive shaft by tapping the shaft end with the plastic hammer.

9. Remove the pump seal spacer and pump seal.

Inspection

10. Check the flow control valve for wear, burrs, and other damage to the edges of the grooves in the valve.

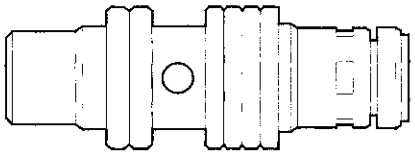

11. Inspect the bore of the flow control valve on the pump housing for scratches and wear.

12. Slip the flow control valve back in the pump housing, and check that it moves in and out smoothly. If OK, go to step 13; if not, replace the pump as an assembly. The flow control valve is not available separately.

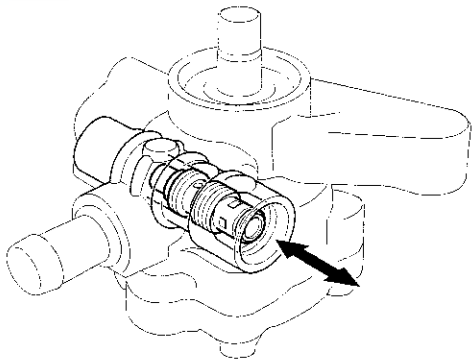

(cont'd)

Pump Overhaul (cont'd)

13. Attach a hose (A) to the end of the flow control valve (B) as shown. Then submerge the flow control valve (B) in a container of power steering fluid or solvent (C), and blow in the hose.
    - If air bubbles leak through the valve at less than 98 kPa (1.0 kgf/cm^2, 14.2 psi), replace the pump as an assembly. The flow control valve is not available separately.
    - If the flow control valve tests OK, set it aside for reassembly later.

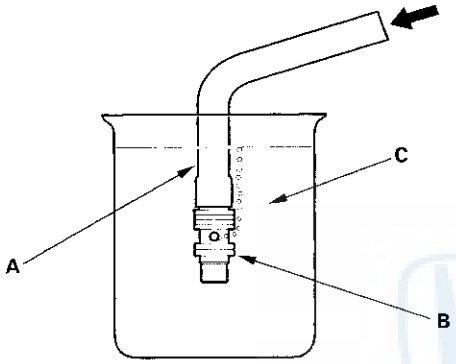

14. Inspect the ball bearing by rotating the outer race slowly. If you feel any play (axial or radial) or roughness remove the faulty ball bearing (A), and install a new one (B).

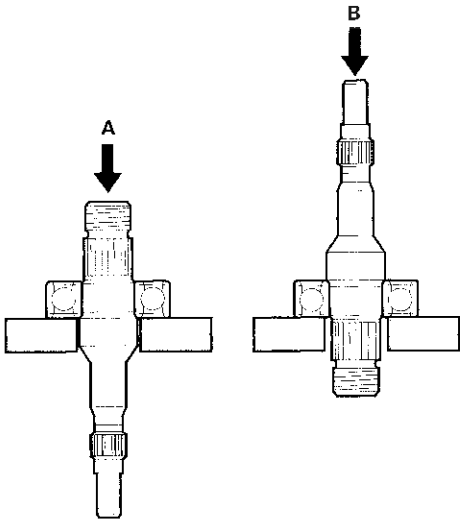

15. Inspect each part shown with an asterisk in the Exploded View; if any of them are worn or damaged, replace the pump as an assembly.

Reassembly

16. Clean the disassembled parts with solvent, and dry them with compressed air. Do not dip rubber parts in solvent.

17. Align the pin (A) of the sub-valve (B) with the oil passage (C) in the pump housing, and push the sub-valve into place. then install the snap ring (D).

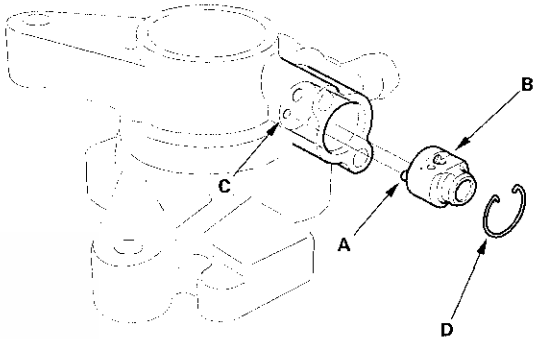

18. Install the new pump seal (A)(with its grooved side facing in) into the pump housing by hand, then install the pump seal spacer (B).

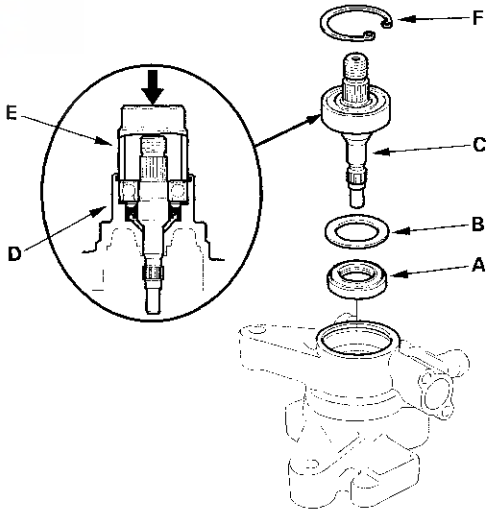

19. Position the pump drive shaft (C) in the pump housing (D), then drive it in using a 29 mm socket (E).

20. Install the 40 mm snap ring (F) with its radiused side facing out.

21. Coat the new pump cover seal (A) with power steering fluid, and install it into the groove in the pump cover (B).

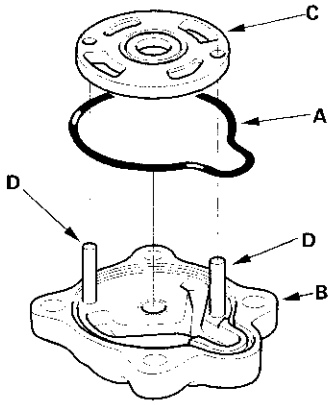

22. Install the outer side plate (C) over the 2 rollers (D).

23. Set the pump cam ring (A) over the 2 rollers with its "•" mark (B) facing up.

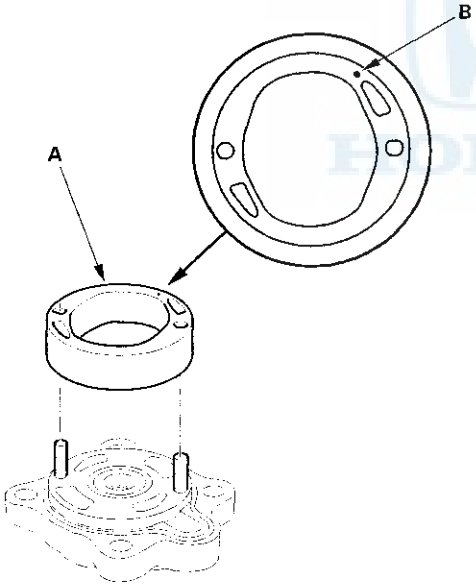

24. Assemble pump rotor (A) to the pump cover (B).

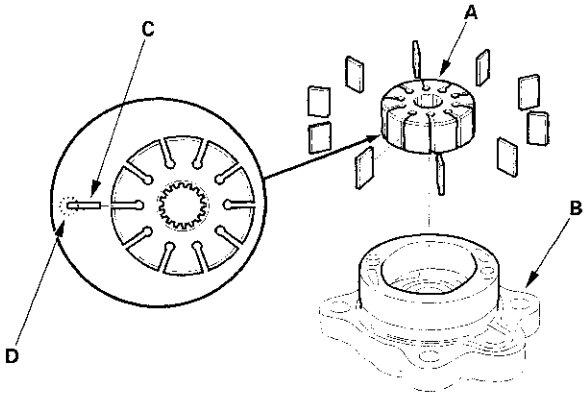

25. Set the 10 vanes (C) in the grooves in the rotor. Make sure that the round ends (D) of the vanes are in contact with the sliding surface of the cam ring.

26. Coat the new O-ring (A) with power steering fluid, and install it into the groove in the side plate (B).

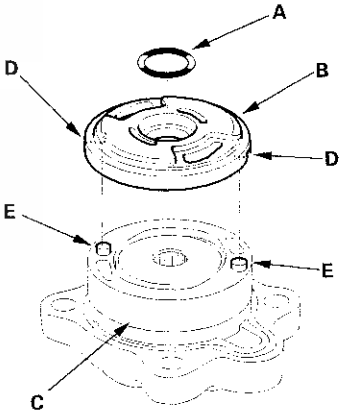

27. Install the side plate on the cam ring (C) by aligning the roller set holes (D) in the side plate with the rollers (E).

(cont'd)

Pump Overhaul (cont'd)

28. Coat the new O-ring (A) with power steering fluid, and position it in the bottom of the pump housing (B).

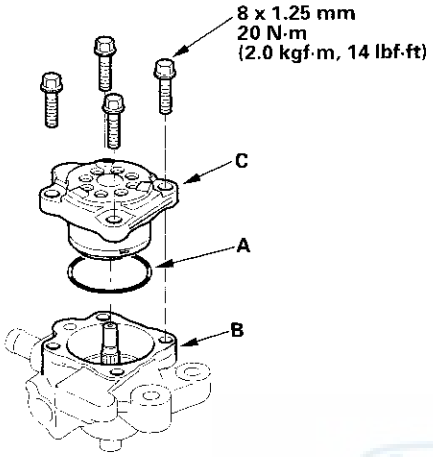

29. Install the pump cover assembly (C) in the pump housing.

30. Coat the flow control valve (A) with power steering fluid, then install it and the spring (B) in the pump housing.

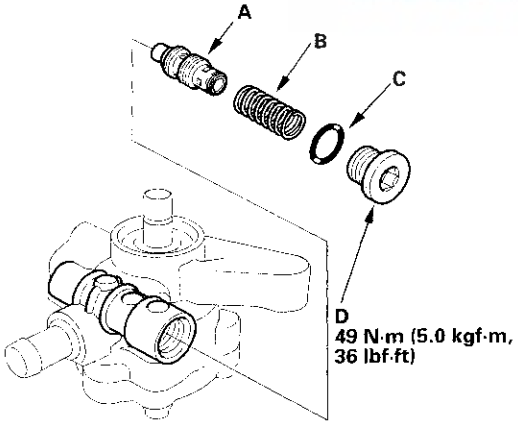

31. Coat the new O-ring (D) with power steering fluid, and install it on the flow control valve cap (E). Install the cap on the pump housing, and tighten it.

32. Install the pulley (A), then loosely install the pulley nut (B). Hold the steering pump in a vise with soft jaws. Be careful not to damage the pump housing with the jaws of the vise.

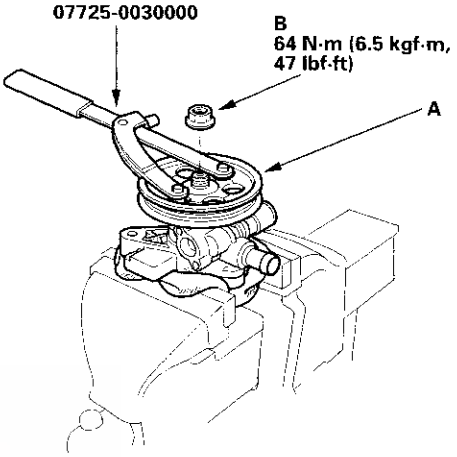

33. Hold the pulley (A) with the special tool, and tighten the pulley nut (B).

34. Check that the pump turns smoothly by turning the pulley by hand.

Rack Guide Adjustment

1. Set the wheels in the straight ahead position.

2. Loosen the rack guide screw locknut (A) with a commercially available 1 3/4 inch crowfoot wrench (B), then remove the rack guide screw (C).

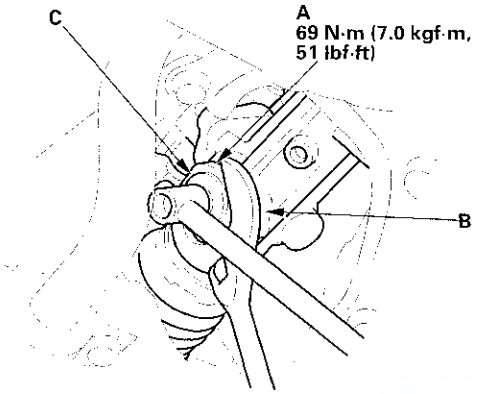

3. Remove the old sealant from rack guide screw threaded section, and apply new sealant all the way around the first three threads (A). Loosely install the rack guide screw on the steering gearbox.

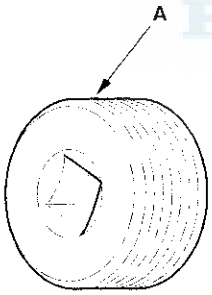

4. Tighten the rack guide screw to 25 N·m (2.5 kgf·m, 18 lbf·ft), then loosen it.

5. Retighten the rack guide screw to 3.9 N·m (0.4 kgf·m, 2.9 lbf·ft), then back it off to specified angle.

   Specified Return Angle: 60°±5°

6. Tighten the locknut while holding the rack guide screw.

7. Check for tight or loose steering through the complete turning travel.

8. Check the steering wheel rotational play and the power assist; refer to the '98-01 Accord Service Manual (see page 17-7).

Steering Gearbox Overhaul

Exploded View

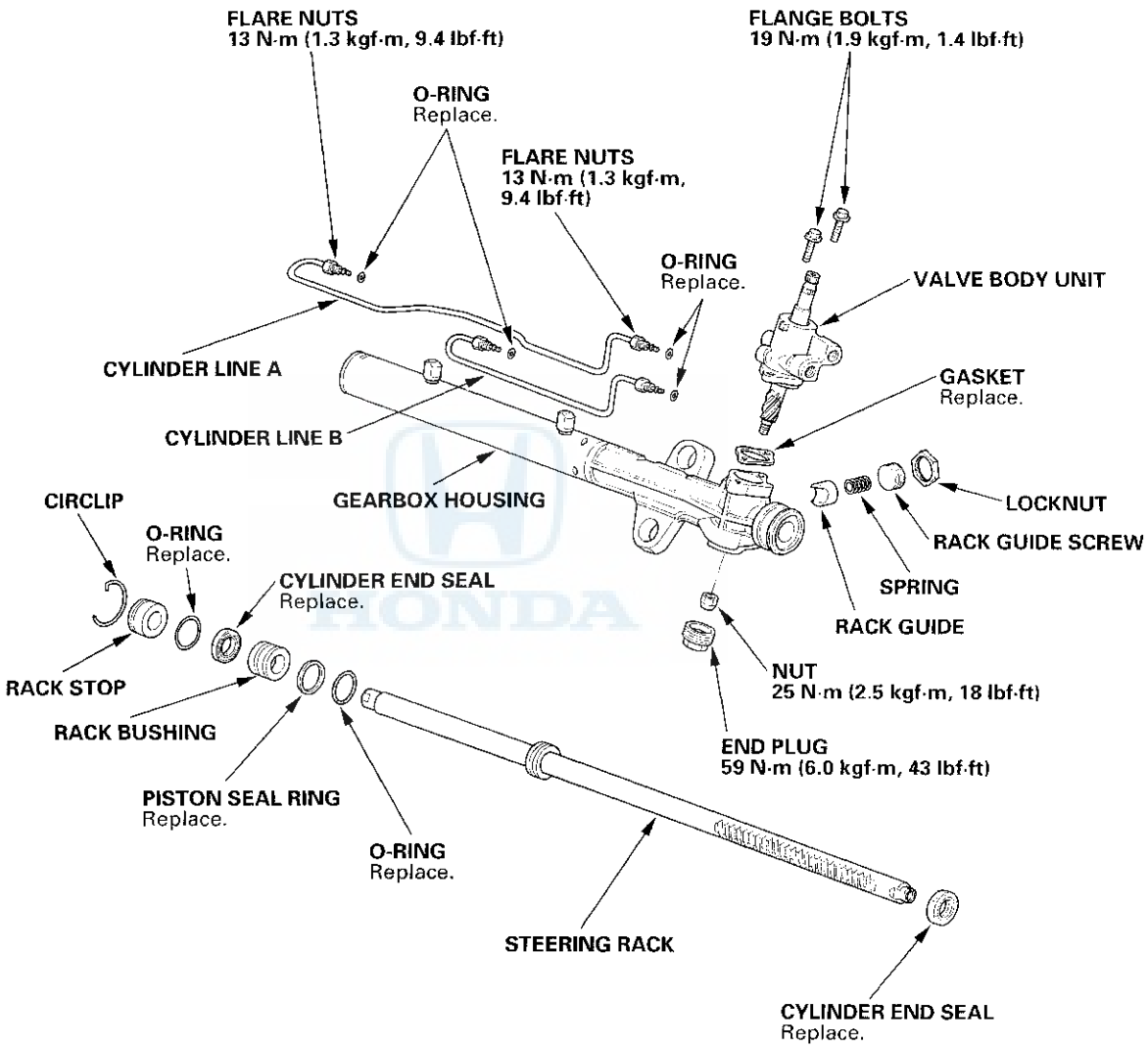

Special Tools Required
- Cylinder end seal remover attachment, 07TAF-SZ50100
- Driver, 07749-0010000
- Attachment, 42 X 47 mm, 07746-0010300
- Piston seal ring guide, 07LAG-SM4010A or 07LAG-SM40100
- Piston seal ring sizing tool, 07LAG-SM4020A or 07LAG-SM40200
- Pincer Oetiker 1098, or equivalent, commercially available

NOTE: Refer to the Exploded View as needed during the following procedure.

Removal

1. Remove the steering gearbox; refer to the '98-01 Accord Service Manual (see page 17-30).

   Note these items during removal:
   - Disconnect the primary H02S sensor connector.
   - Remove exhaust pipe A (see page 5-2) to allow clearance for the steering gearbox.

Disassembly

2. Remove the boot band (A) and tie-rod clips (B). Pull the boots away from the ends of the gearbox.

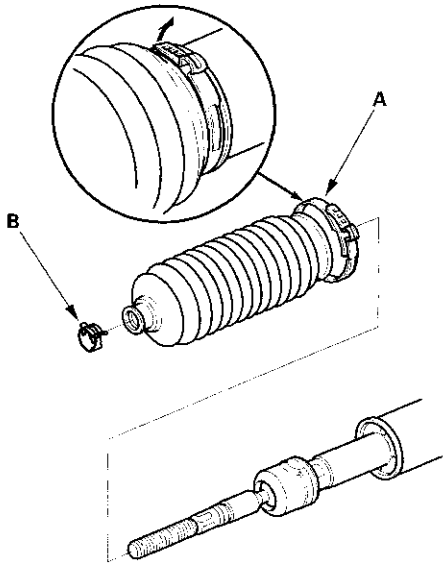

3. Unbend the lock washer (A).

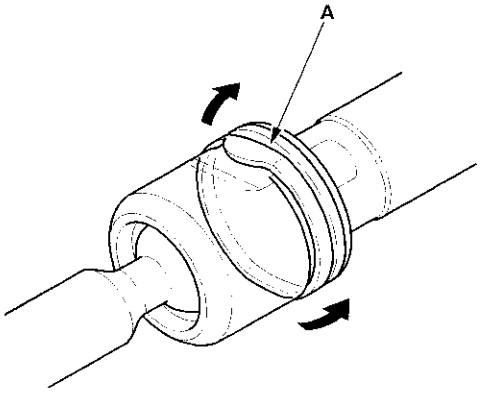

4. Hold the flat surface sections (A) of the right side steering rack (B) with a wrench, and unscrew both rack ends (C) with a wrench. Be careful not to damage the rack surface with the wrench. Remove the lock washer (D) and stop washer (E).

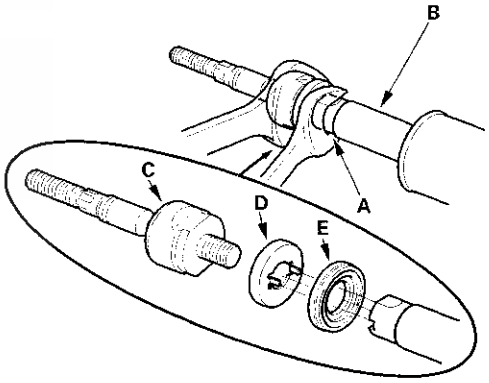

(cont'd)

Steering Gearbox Overhaul (cont'd)

5. Loosen the locknut (A), then remove the rack guide screw (B).

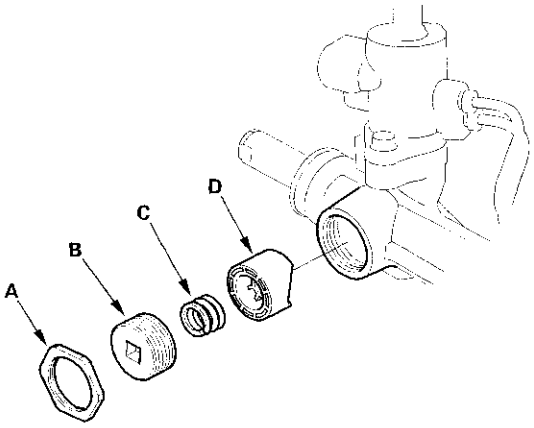

6. Remove the spring (C) and the rack guide (D) from the gearbox.

7. Remove the cylinder lines from the gearbox.

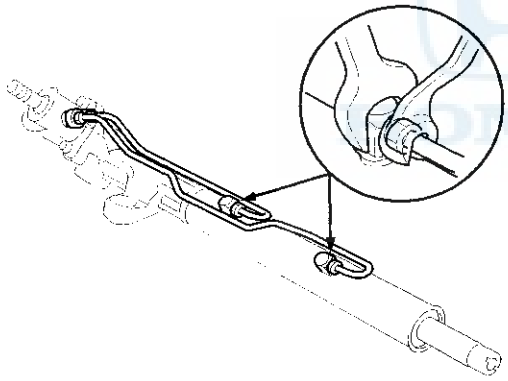

8. Drain the fluid from the cylinder fittings by slowly moving the steering rack back and forth.

9. Remove the end plug (A) from the gearbox housing, then remove the nut (B) from the pinion shaft end.

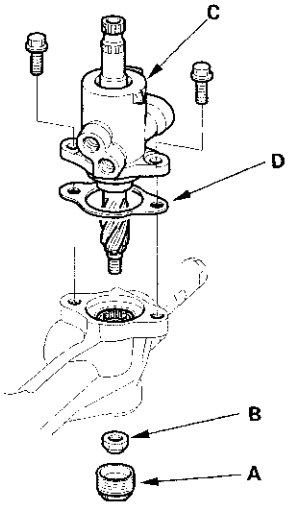

10. Remove the two flange bolts, the valve body unit (C), and gasket (D) from the gearbox. Check that the valve turns smoothly by turning the pinion shaft. If any play or roughness is felt, replace the valve body unit with a new part if necessary. Do not try to disassemble the valve body unit.

11. Slide the steering rack all the way to the left.

12. Turn the rack stop (A) counterclockwise until the end of the circlip (B) sticks out from the hole (C) in the rack stop. Then turn it clockwise to remove the circlip (D).

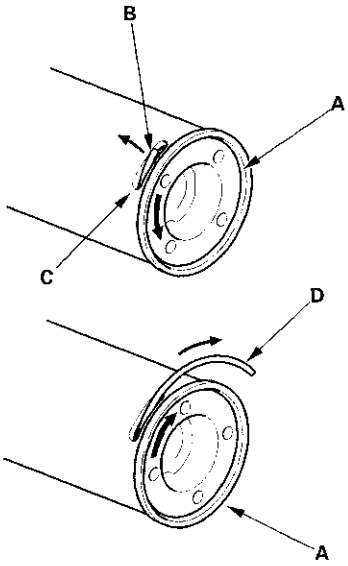

13. Remove the rack stop (A), rack bushing (B), and steering rack (C) from the steering gearbox.

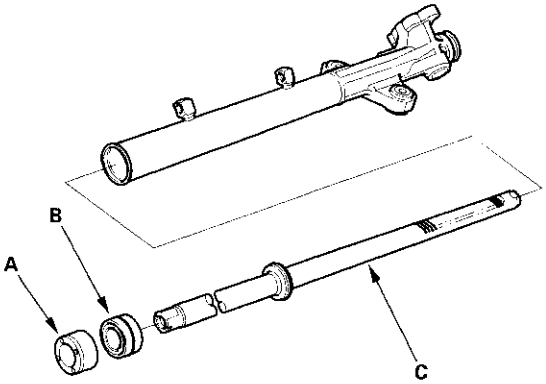

14. Remove the O-ring (A) and cylinder end seal (B) from the rack bushing (C).

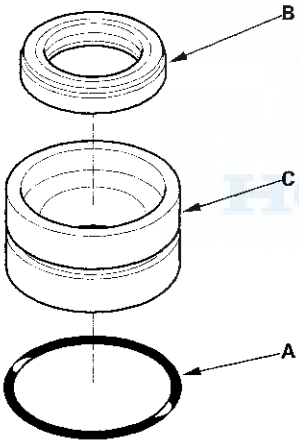

15. Carefully pry the piston seal ring (A) and O-ring (B) off the rack piston. Be careful not to damage the inside of seal ring groove and piston edges when removing the seal ring.

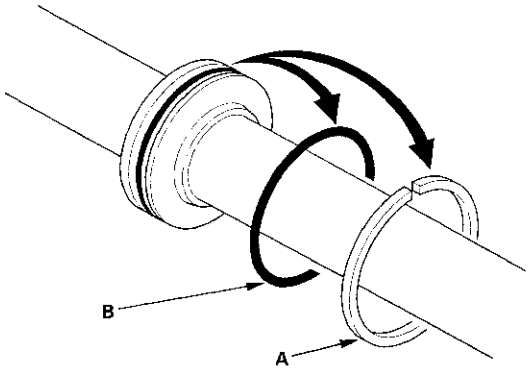

16. Install a washer (O.D. 27.5 mm, P/N 94103-10400) (A) so it will fit through the rack guide hole of the gearbox housing, then position the washer on the cylinder end seal (B). Make sure that the washer is securely positioned on the cylinder end seal edges.

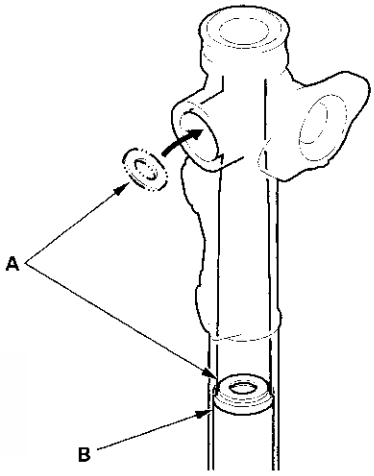

17. Install a socket with a 27.5 mm O.D. (A) onto a 24 in. long, 3/8 in. drive extension (B), and carefully place it on the washer (C).

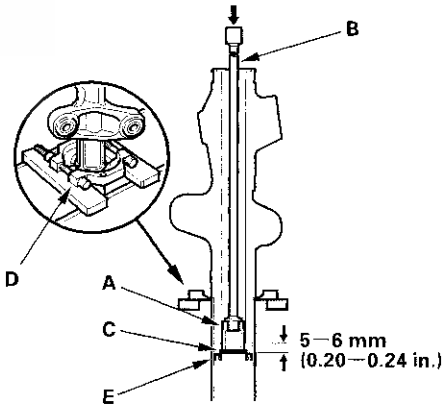

18. Install a bearing separator (D) on the gearbox housing. Set the steering gearbox in a press so the gearbox housing points upward, then push out the cylinder end seal (E) 5 - 6 mm (0.20 - 0.24 in.) by pressing on the end of the extension.

19. Remove the steering gearbox from the press, and remove the washer from the gearbox inside.

(cont'd)

Steering Gearbox Overhaul (cont'd)

20. Turn the special tool so it will fit through the rack guide hole of the steering gearbox, then position the special tool on the cylinder end seal (A). Make sure that the special tool is securely positioned on the seal edges.

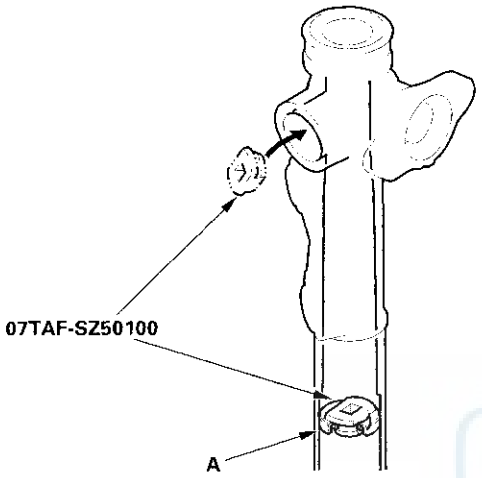

21. Insert a 24 in. long, 3/8 in. drive extension (A), on the special tool. Place the steering gearbox in a press, then remove the cylinder end seal (B) from of the gearbox by pressing on the end of the extension.

    Note these items when pressing the cylinder end seal:
    - Keep the tool straight to avoid damaging the cylinder wall. Check the tool angle, and correct it if necessary, when removing the cylinder end seal.
    - Use a press to remove the cylinder end seal. Do not try to remove the seal by striking the tool; striking the tool would break the cylinder end seal, and the seal would remain in the gearbox.

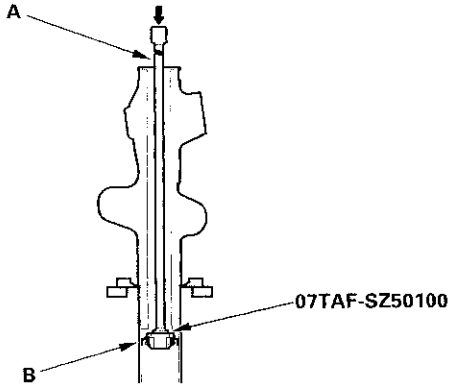

Reassembly

22. Coat the special tool with power steering fluid, then slide it onto the rack, big end first.

23. Position the new O-ring (A) and new piston seal ring (B) on the special tool, then slide them down toward the big end of the tool.

    Note these items during reassembly:
    - Do not over expand the resin seal rings. Install the resin seal rings with care so as not to damage them. After installation, be sure to contract the seal ring using the special tool (sizing tool).
    - Replace the piston's O-ring and seal ring as a set.

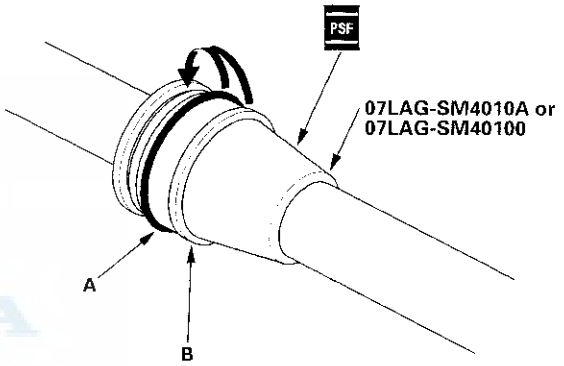

24. Pull the O-ring off into the piston groove, then pull the piston seal ring off into the piston groove on top of the O-ring.

25. Coat the piston seal ring (A) and the inside of the special tool with power steering fluid, then carefully slide the tool onto the rack and over the piston seal ring.

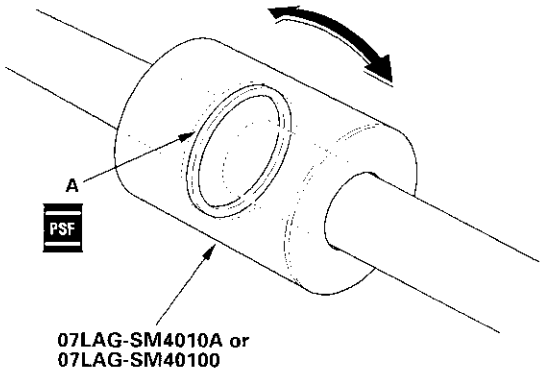

26. Move the special tool back and forth several times to make the piston seal ring fit snugly in the piston.

27. Wrap vinyl tape around the rack teeth and rack end edges, then coat the surface of the tape with power steering fluid. Make sure that the vinyl tape is wrapped carefully so that there is no stepped portion.

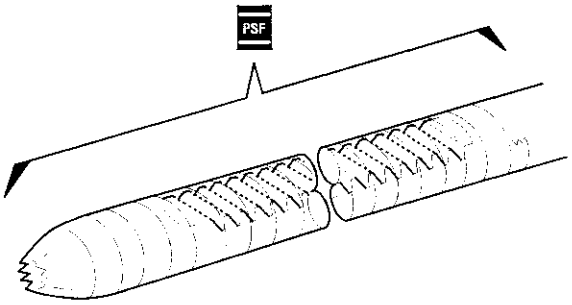

28. Coat the inside surface of the new cylinder end seal (A) with power steering fluid, then install it onto the steering rack with its grooved side toward the piston. When installing the cylinder end seal, be careful not damage the lip of the seal with the edges or teeth of the steering rack.

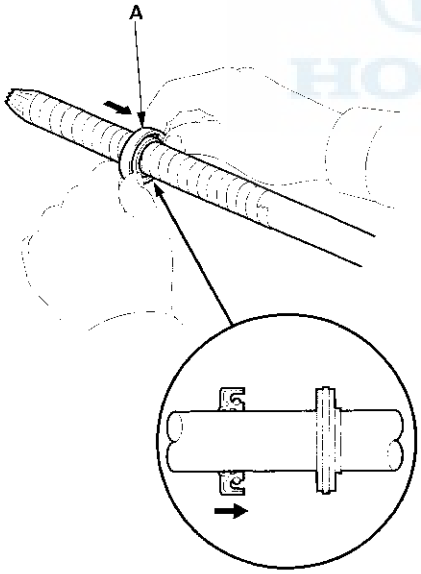

29. Remove the vinyl tape from the steering rack, then remove any adhesive residue.

30. Grease the steering rack teeth, then insert the steering rack into the gearbox housing. Be careful not to damage to inner surface of the cylinder wall with the rack edges.

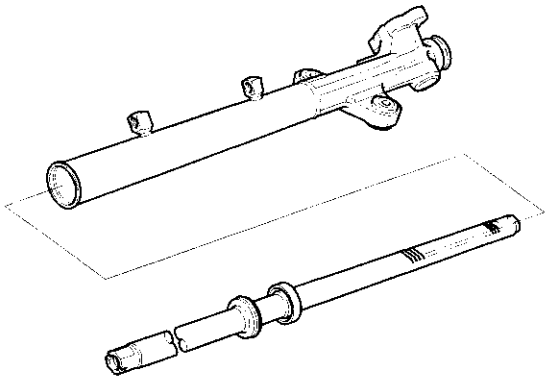

31. Insert a deep socket (A) onto the steering rack as shown.

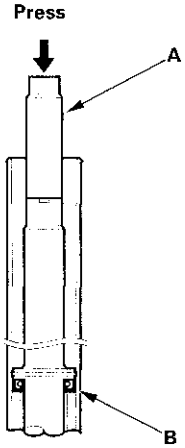

32. Install the cylinder and seal (B) into the bottom of the cylinder by pressing on the tool with a press. Do not push on the tool with excessive force as it may damage the cylinder end seal.

33. Remove the tool, and center the steering rack.

(cont'd)

Steering Gearbox Overhaul (cont'd)

34. Wrap vinyl tape around the rack end edges, and coat the surface of the tape with power steering fluid. Make sure that the vinyl tape is wrapped carefully so there is no stepped portion.

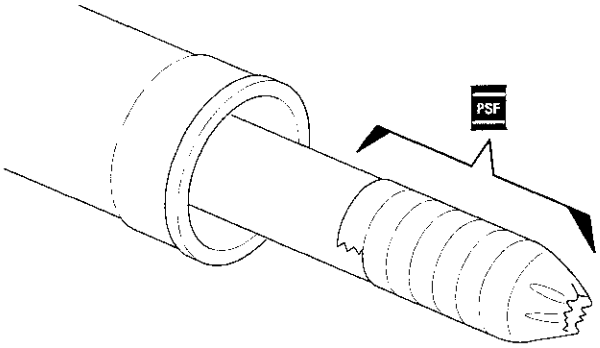

35. Coat the inside surface of the new cylinder end seal (A) with power steering fluid, then press it into the rack bushing (B) using the special tools.

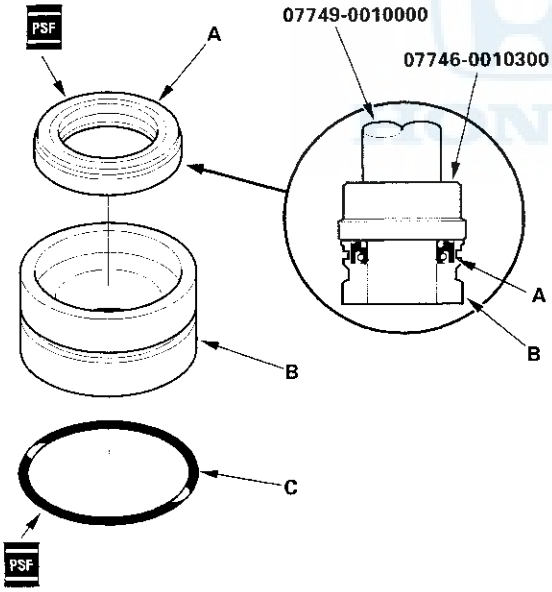

36. Coat the new O-ring (C) with power steering fluid, and carefully fit it in the groove of the rack bushing.

37. Install the rack bushing onto the steering rack with the cylinder end seal grooved side toward the piston. Push in the rack bushing with your finger.

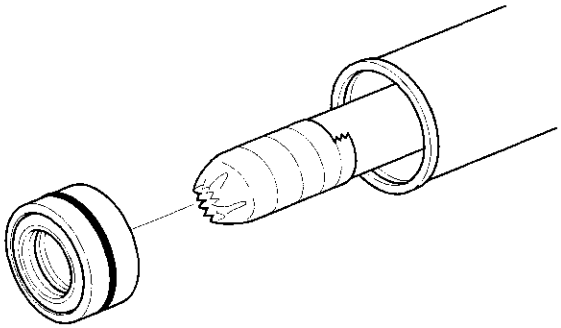

38. Remove the vinyl tape from the steering rack, then remove any adhesive residue.

39. Install the rack stop (A) onto the steering rack so the hole (B) is aligned with the slot (C) on the steering rack.

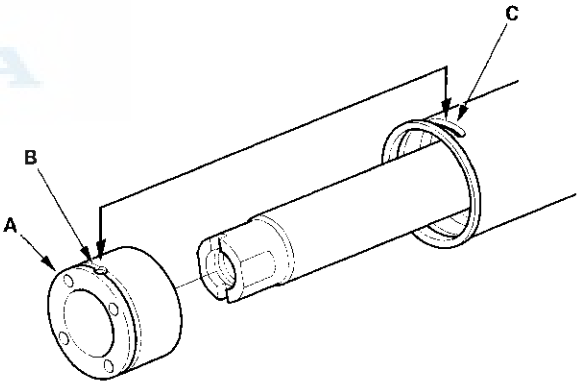

40. Insert the end of the circlip (A) into the hole (B) of the rack stop (C). Turn the rack stop counterclockwise until the circlip is fully seated in the rack stop.

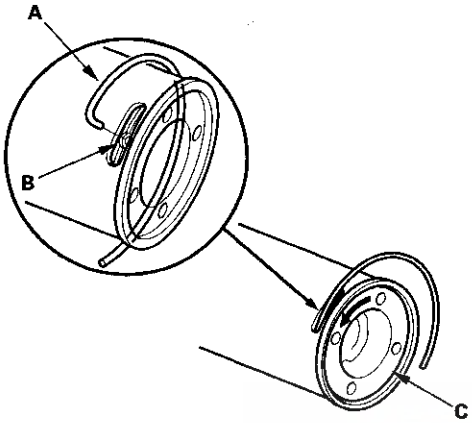

41. Apply grease to the needle bearing (A) in the gearbox housing, and install the valve body unit (B) and gasket (C) by engaging the gears. Note the valve body unit installation position (direction of line connections). Then loosely install the 2 flange bolts.

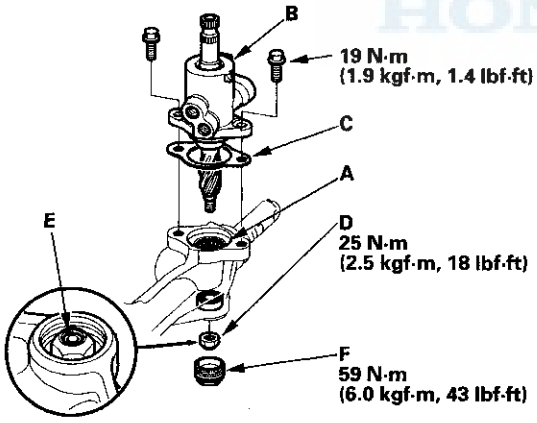

42. Install the nut (D) onto the pinion shaft end, and tighten to specified torque. After tightening, use a drift to stake the nut shoulder (E) against the pinion shaft.

43. Apply sealant all the way around the threads on the end plug (F), install the end plug onto the gearbox housing, and tighten it to the specified torque.

44. Tighten the flange bolts to the specified torque.

45. Before installing the cylinder lines, coat the new O-rings with power steering fluid, then install the lines.

Note these items during reassembly:
- Thoroughly clean the joints of the cylinder lines. The joints must be free of foreign material.
- Install the cylinder lines by tightening the flare nuts by hand first, then tighten the flare nuts to the specified torque.

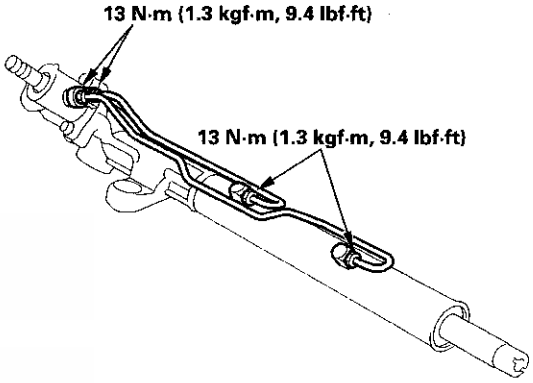

46. Apply multipurpose Grease to the sliding surface of the rack guide (A), and install it onto the gearbox housing.

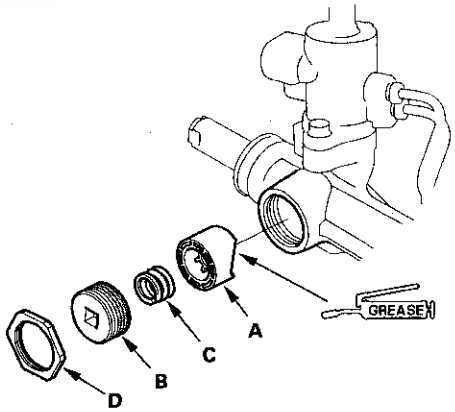

47. Apply new sealant all the way around the first 3 threads of the rack guide screw (B), then install the spring (C), rack guide screw, and locknut (D).

48. Adjust the rack guide screw (see page 17-19). After adjusting, check that the rack moves smoothly by sliding it right and left.

(cont'd)

Steering Gearbox Overhaul (cont'd)

49. Install the stop washer (A) with the chamfered side facing out, and screw each rack end (B) into the rack while holding the lock washer (C) so its tabs (D) are in the slots (E) in the end of the rack.

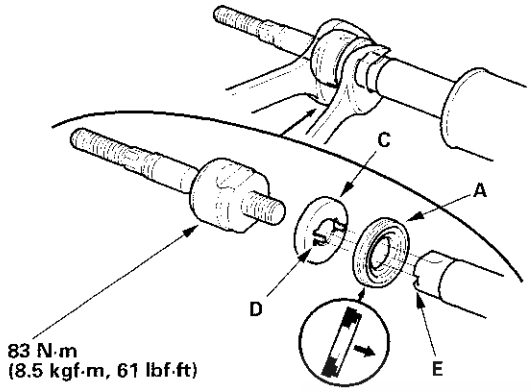

50. Hold the flat surface sections of the right side steering rack with a wrench, and tighten both rack ends. Be careful not to damage the rack surface with the wrench.

51. Bend the lock washer back against the flat spots on the rack end joint housing.

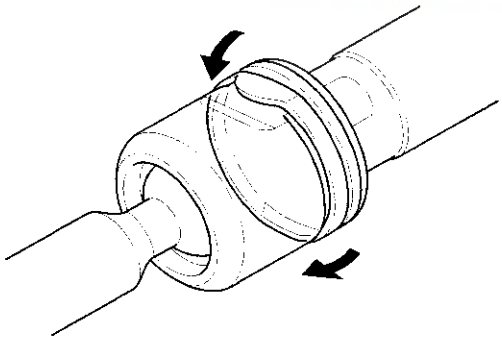

52. Apply multipurpose grease (A) to the circumference of the rack end joint housing.

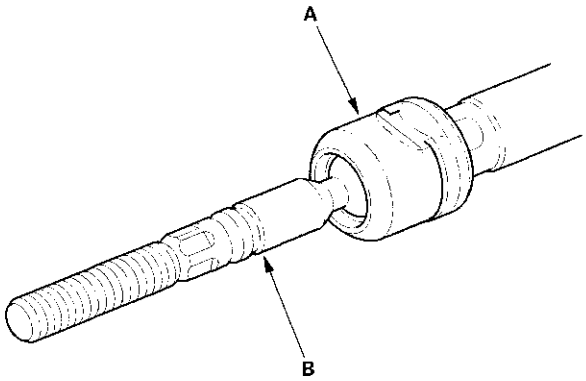

53. Apply a light coat of silicone grease (B) to the boot grooves (B) on the rack ends.

54. Center the steering rack within its stroke. Install the boots on the rack ends with the tie-rod clips. After installing the boots, wipe the grease off the threaded section (A) of the rack end.

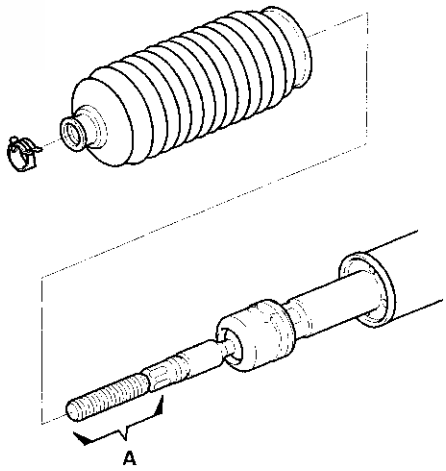

55. Install the new boot bands by aligning the tabs (A) with the holes (B) of the band.

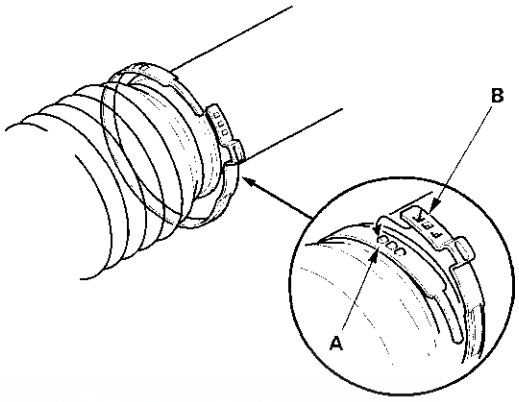

56. Close the ear portion (A) of the band with a commercially available Oetiker 1098 pincer or equivalent (B).

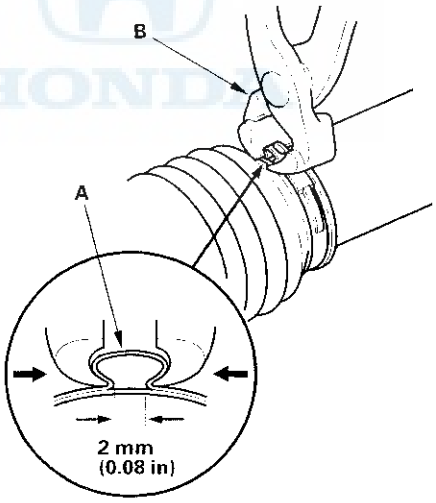

57. Slide the rack right and left to be certain that the boots are not deformed or twisted.

Installation

58. Install the steering gearbox; refer to the '98-01 Accord Service Manual (see page 17-47).

    Note these items during installation:
    - Reinstall exhaust pipe A with new gasket (see page 5-11).
    - Reconnect the primary HO2S sensor connector.

Brakes

NOTE: Refer to the 1998–2001 Accord Service Manual, P/N 61S8008 for the items not shown in this section.

Outline of V6 Model Change

The front brake caliper is different; the brake pad replacement and the brake caliper overhaul procedures are included.

Front Brake Pads Inspection and Replacement

⚠CAUTION

Frequent inhalation of brake pad dust,regardless of material composition,could be hazardous to your health.
- Avoid breathing dust particles.
- Never use an air hose or brush to clean brake assemblies.Use an OSHA-approved vacuum cleaner.

1. Loosen the front wheel nuts slightly. Raise the front of the vehicle, and make sure it is securely supported. Remove the front wheels. Remove the brake hose mounting bolts (A) from the knuckle.

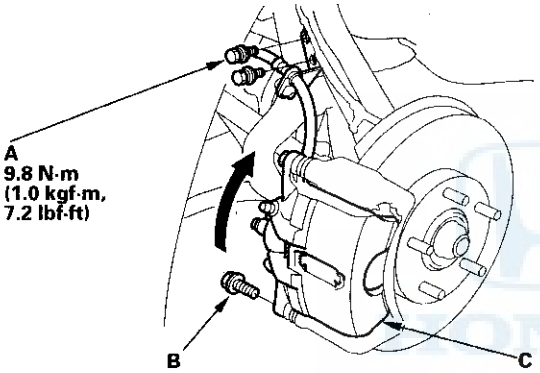

2. Remove the caliper bolt (B), and pivot the caliper (C) up out of the way. If the caliper pin head is the hex. type, the caliper bolt should be removed using a wrench while holding the caliper pin with another wrench. Check the hoses and pin boots for damage and deterioration.

3. Remove the pads (A), pad shims (B), and pad retainers (C).

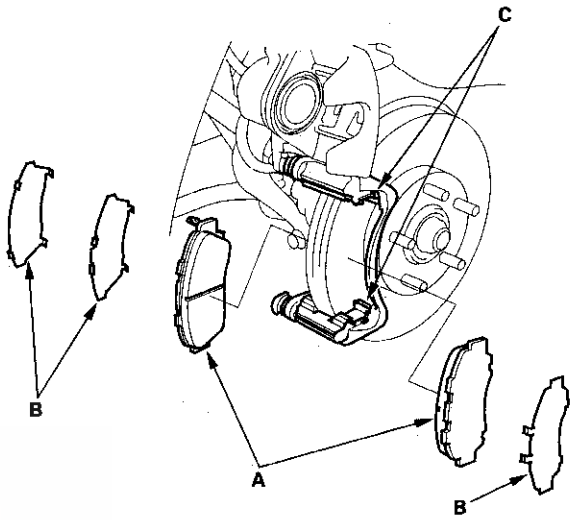

4. Using vernier calipers, measure the thickness of each brake pad lining. The measurement does not include the pad backing plate (A) thickness.

Brake Pad Thickness:
Standard: 10.5 – 11.5 mm (0.41 – 0.45 in)
Service Limit: 1.6 mm (0.06 in)

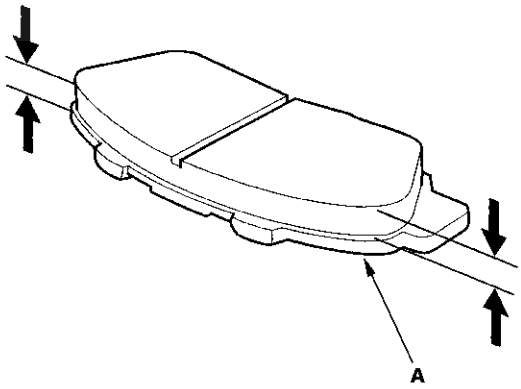

5. If the brake pad thickness is less than the service limit, replace the front pads and shims together as a set.

6. Clean the caliper thoroughly; remove any rust, and check for grooves and cracks.

7. Check the brake disc for damage and cracks.

8. Install the pad retainers (A).

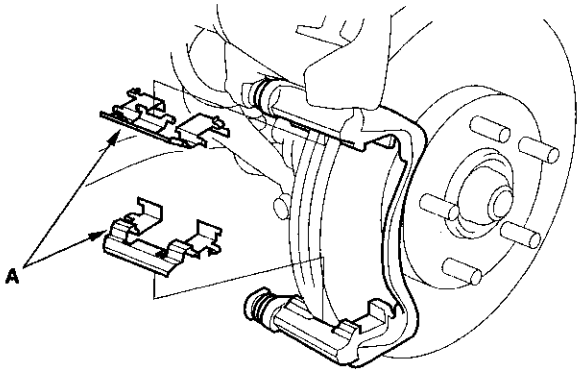

9. Apply Molykote M77 grease to both sides of the pad shims (A) and the back of the pads (B). Wipe excess grease off the shim.

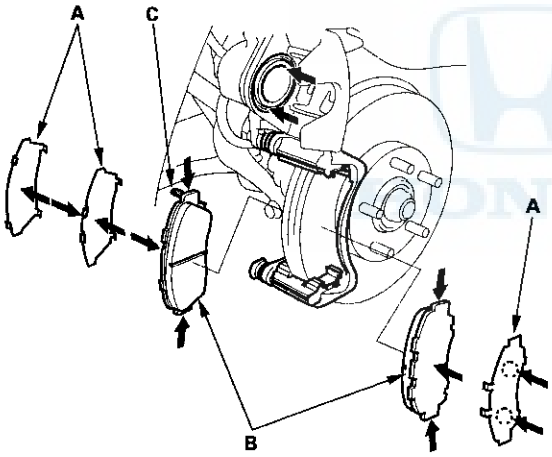

10. Install the brake pads and pad shims correctly. Install the pad with the wear indicator (C) on the inside.If you are reusing the pads,always reinstall the brake pads in their original positions to prevent loss of braking efficiency.

11. Push in the piston (A) so the caliper will fit over the pads. Make sure the piston boot is in position to prevent damaging it when pivoting the caliper down.

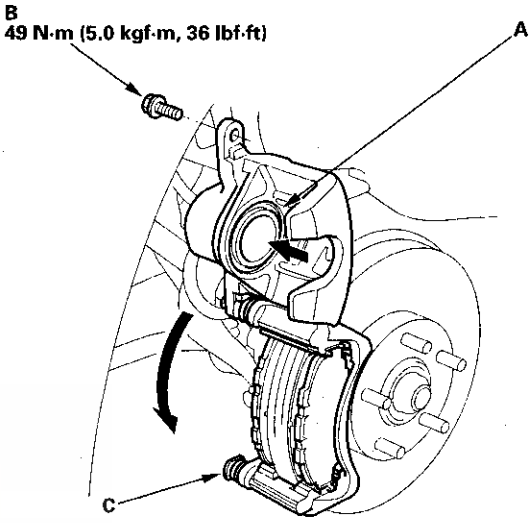

12. Pivot the caliper down into position, being careful not to damage the pin boot. Install the caliper bolt (B), and torque it to proper specification. If the caliper pin head (C) is the hex. type, the caliper bolt should be installed by using a wrench while holding the caliper pin with another wrench. Install the brake hose onto the knuckle.

13. Press the brake pedal several times to make sure the brakes work, then road-test.

    NOTE: Engagement of the brake may require a greater pedal stroke immediately after the brake pads have been replaced as a set. Several applications of the brake pedal will restore the normal pedal stroke.

14. After installation, check for leaks at hose and line joints and connections, and retighten if necessary.

Conventional Brake Components

Front Brake Caliper Overhaul

⚠CAUTION

Frequent inhalation of brake pad dust, regardless of material composition, could be hazardous to your health.
- Avoid breathing dust particles
- Never use an air hose or brush to clean brake assemblies. Use an OSHA-approved vacuum cleaner.

Remove, disassemble, inspect, reassemble, and install the caliper, and note these items:
- Do not spill brake fluid on the vehicle; It may damage the paint; if brake fluid gets on the paint, wash it off immediately with water.
- Clean all parts in brake fluid and air dry; blow out all passages with compressed air.
- Before reassembling, check that all parts are free of dirt and other foreign particles.
- Replace parts with new ones as specified in the illustration.
- Make sure no dirt or other foreign matter gets into the brake fluid.
- Make sure no grease or oil gets on the brake discs or pads.
- When reusing pads, always reinstall the brake pads in their original positions to prevent loss of braking efficiency.
- Do not reuse drained brake flued.
- Always use Genuine Honda DOT 3 Brake Fluid. Non-Honda brake fluid can cause corrosion and decrease the life of the system.
- Coat the piston, piston seal, and caliper bore with clean brake fluid.
- Replace all rubber parts with new ones.
- After installing the caliper, check the brake hose and line for leaks, interference, and twisting.

Sedan:

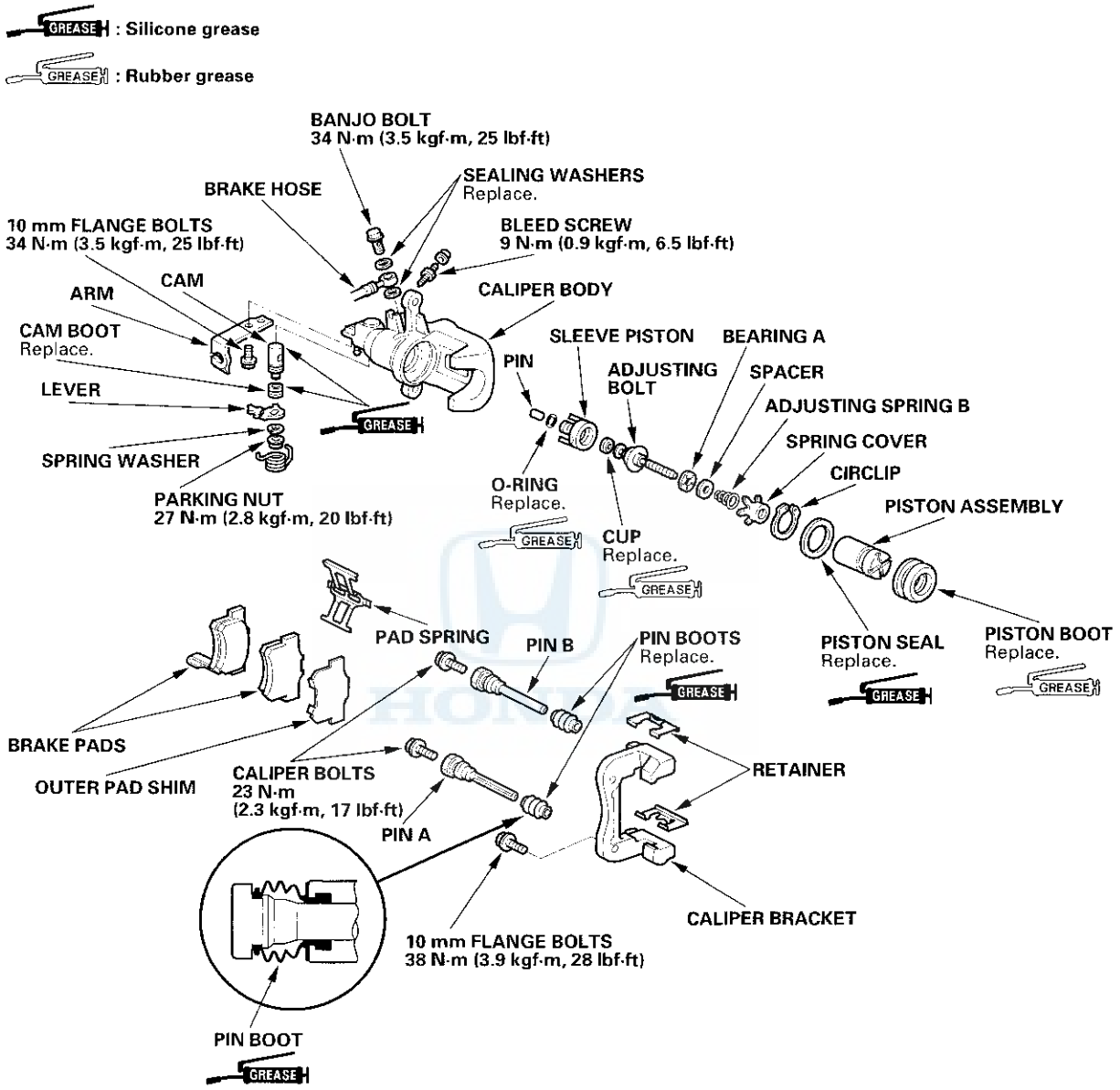
GREASE : Silicone grease
GREASE : Rubber grease
BANJO BOLT
34 N·m (3.5 kgf·m, 25 lbf·ft)
SEALING WASHERS
Replace.
BRAKE HOSE
10 mm FLANGE BOLTS
34 N·m (3.5 kgf·m, 25 lbf·ft)
BLEED SCREW
9 N·m (0.9 kgf·m, 6.5 lbf·ft)
CAM
ARM
CALIPER BODY
CAM BOOT
Replace.
SLEEVE PISTON
BEARING A
PIN
ADJUSTING BOLT
SPACER
LEVER
ADJUSTING SPRING B
SPRING COVER
SPRING WASHER
CIRCLIP
O-RING
Replace.
PISTON ASSEMBLY
PARKING NUT
27 N·m (2.8 kgf·m, 20 lbf·ft)
CUP
Replace.
PAD SPRING
PIN B
PIN BOOTS
Replace.
PISTON SEAL
Replace.
PISTON BOOT
Replace.
BRAKE PADS
OUTER PAD SHIM
CALIPER BOLTS
23 N·m
(2.3 kgf·m, 17 lbf·ft)
RETAINER
PIN A
CALIPER BRACKET
10 mm FLANGE BOLTS
38 N·m (3.9 kgf·m, 28 lbf·ft)
PIN BOOT
GREASE

(cont'd)

Front Brake Caliper Overhaul (cont'd)

Coupe:

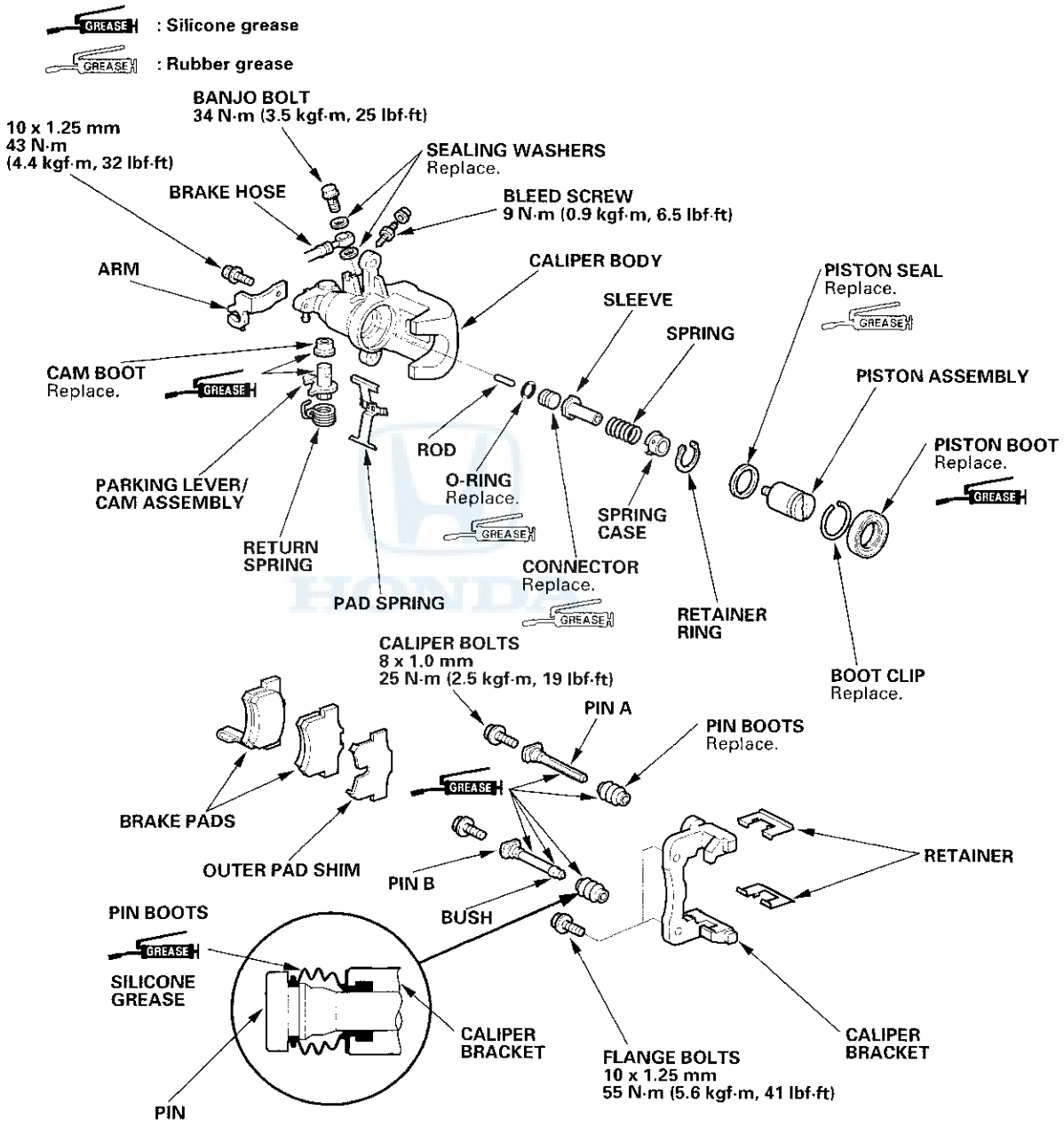

Brakes

ABS Components ('98 – 00 Models)

NOTE: Refer to the 1998 2001 Accord Service Manual (P/N 61S8008) for the items not shown in this section.

Outline of V6 Model Changes

- The locations of the modulator unit and ABS control unit were changed;
  - Component location index was added.
  - Modulator unit removal and installation was added.
  - ABS control unit replacement was added.
- Ground numbers of pump motor ground and ABS control unit ground were changed;
  - DTC troubleshooting index was added.
  - Symptom troubleshooting index was added.
  - Circuit diagram was added.
  - DTC troubleshooting was added.
  - ABS indicator circuit troubleshooting was added.

ABS Components

Component Location Index

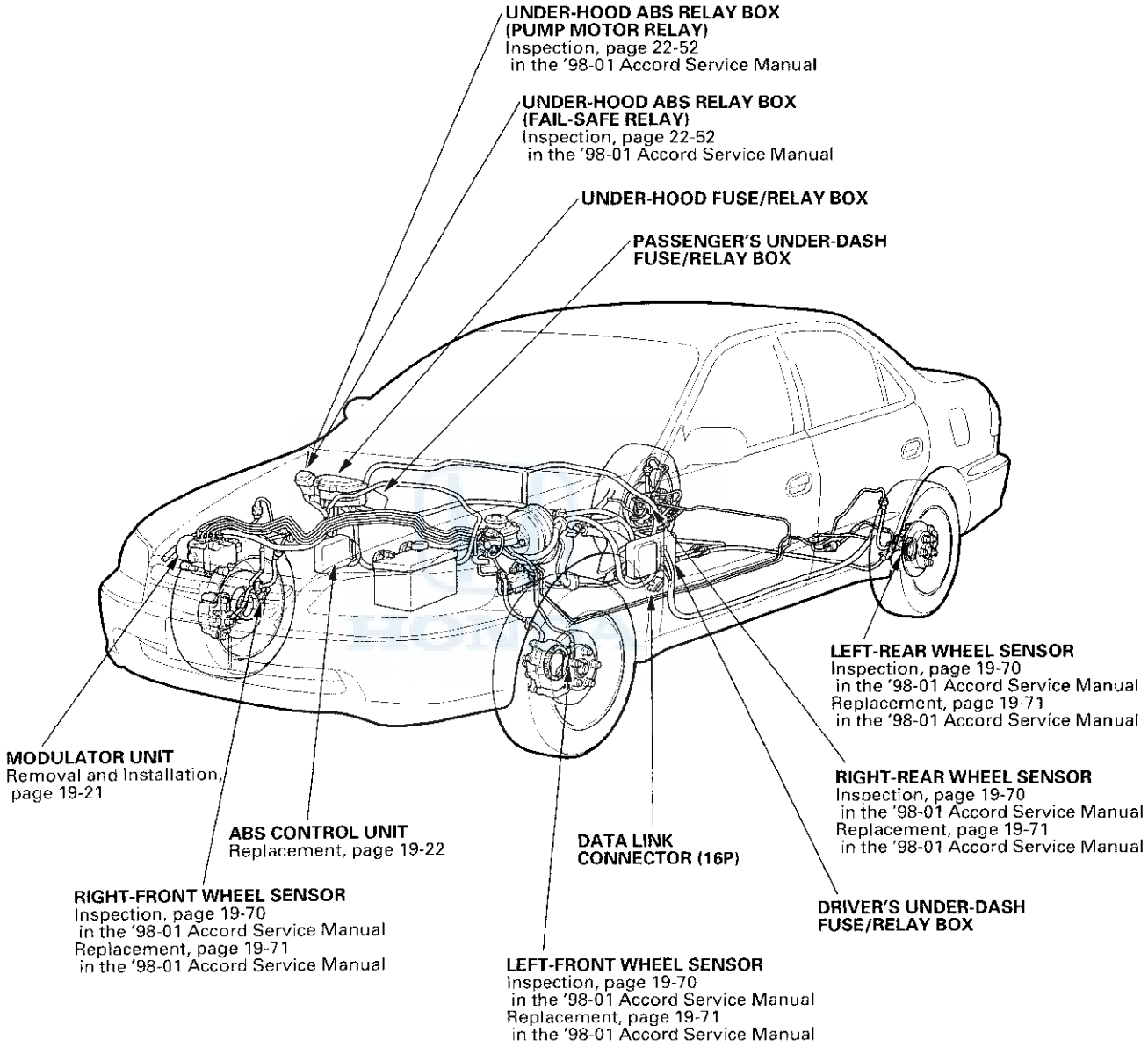

DTC Troubleshooting Index

DTC	Detection Item	Note
DTC: 11	Right-front wheel sensor (open/short to body ground/short to power)	Refer to the '98-01 Accord Service Manual (see page 19-52)
DTC: 12	Right-front wheel sensor (electrical noise/intermittent interruption)	Refer to the '98-01 Accord Service Manual (see page 19-53)
DTC: 13	Left-front wheel sensor (open/short to body ground/short to power)	Refer to the '98-01 Accord Service Manual (see page 19-52)
DTC: 14	Left-front wheel sensor (electrical noise/intermittent interruption)	Refer to the '98-01 Accord Service Manual (see page 19-53)
DTC: 15	Right-rear wheel sensor (open/short to body ground/short to power)	Refer to the '98-01 Accord Service Manual (see page 19-52)
DTC: 16	Right-rear wheel sensor (electrical noise/intermittent interruption)	Refer to the '98-01 Accord Service Manual (see page 19-53)
DTC: 17	Left-rear wheel sensor (open/short to body ground/short to power)	Refer to the '98-01 Accord Service Manual (see page 19-52)
DTC: 18	Left-rear wheel sensor (electrical noise/intermittent interruption)	Refer to the '98-01 Accord Service Manual (see page 19-53)
DTC: 21	Right-front pulser	Refer to the '98-01 Accord Service Manual (see page 19-54)
DTC: 22	Left-front pulser	Refer to the '98-01 Accord Service Manual (see page 19-54)
DTC: 23	Right-rear pulser	Refer to the '98-01 Accord Service Manual (see page 19-54)
DTC: 24	Left-rear pulser	Refer to the '98-01 Accord Service Manual (see page 19-54)
DTC: 31	Right-front inlet solenoid	Refer to the '98-01 Accord Service Manual (see page 19-55)
DTC: 32	Right-front outlet solenoid	Refer to the '98-01 Accord Service Manual (see page 19-55)
DTC: 33	Left-front inlet solenoid	Refer to the '98-01 Accord Service Manual (see page 19-55)
DTC: 34	Left-front outlet solenoid	Refer to the '98-01 Accord Service Manual (see page 19-55)
DTC: 35	Right-rear inlet solenoid	Refer to the '98-01 Accord Service Manual (see page 19-55)
DTC: 36	Right-rear outlet solenoid	Refer to the '98-01 Accord Service Manual (see page 19-55)
DTC: 37	Left-rear inlet solenoid	Refer to the '98-01 Accord Service Manual (see page 19-55)
DTC: 38	Left-rear outlet solenoid	Refer to the '98-01 Accord Service Manual (see page 19-55)
DTC: 41	Right-front wheel lock	Refer to the '98-01 Accord Service Manual (see page 19-58)
DTC: 42	Left-front wheel lock	Refer to the '98-01 Accord Service Manual (see page 19-58)
DTC: 43	Right-rear wheel lock	Refer to the '98-01 Accord Service Manual (see page 19-58)
DTC: 44	Left-rear wheel lock	Refer to the '98-01 Accord Service Manual (see page 19-58)
DTC: 51	Motor lock	Refer to the '98-01 Accord Service Manual (see page 19-59)
DTC: 52	Motor stuck OFF	(see page 19-14)
DTC: 53	Motor stuck ON	(see page 19-16)
DTC: 54	Fail-safe relay	Refer to the '98-01 Accord Service Manual (see page 19-63)
DTC: 61	Low ignition voltage	Refer to the '98-01 Accord Service Manual (see page 19-65)
DTC: 62	High ignition voltage	Refer to the '98-01 Accord Service Manual (see page 19-65)
DTC: 71	Different diameter tire	Refer to the '98-01 Accord Service Manual (see page 19-66)
DTC: 81	Central Processing Unit (CPU) diagnosis, and ROM/RAM diagnosis	Refer to the '98-01 Accord Service Manual (see page 19-66)

ABS Components

Symptom Troubleshooting Index

Symptom	Diagnostic procedure	Also check for
ABS indicator does not come on	ABS Indicator Circuit Troubleshooting (see page 19-18)	
ABS indicator does not go off and no DTC is stored	ABS Indicator Circuit Troubleshooting (see page 19-18)	

ABS Components

Circuit Diagram

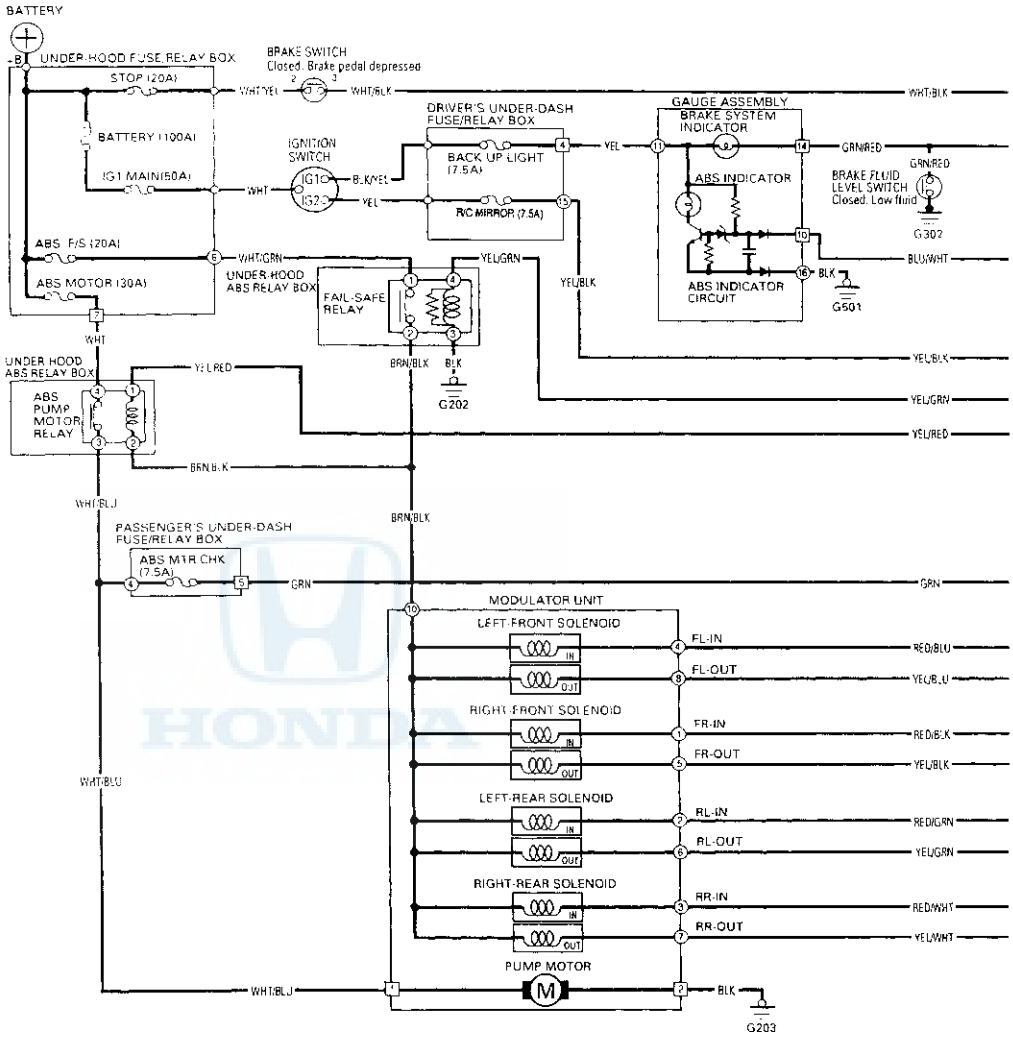

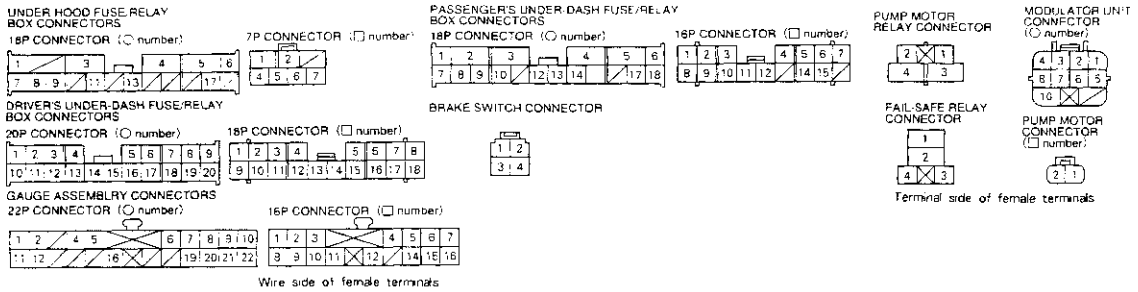

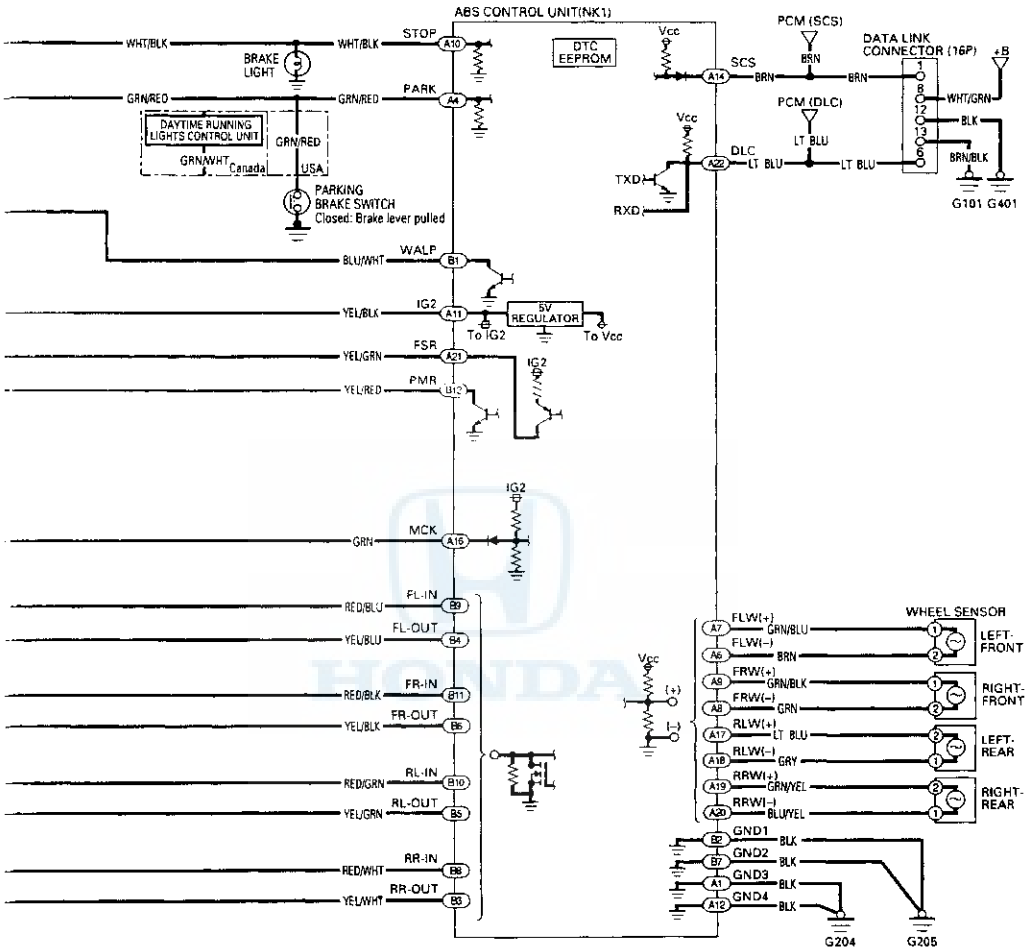
ABS CONTROL UNIT(NK1)
DTC EEPROM
WHT/BLK
STOP
A10
BRAKE LIGHT
GRN/RED
PARK
A4
DAYTIME RUNNING LIGHTS CONTROL UNIT
GRN/WHT Canada
GRN/RED USA
PARKING BRAKE SWITCH
Closed: Brake lever pulled
BLU/WHT
WALP
B1
YEL/BLK
IG2
A11
To IG2
5V REGULATOR
To Vcc
YEL/GRN
FSR
A21
YEL/RED
PMR
B12
GRN
MCK
A16
RED/BLU
FL-IN
B9
YEL/BLU
FL-OUT
B4
RED/BLK
FR-IN
B11
YEL/BLK
FR-OUT
B6
RED/GRN
RL-IN
B10
YEL/GRN
RL-OUT
B5
RED/WHT
RR-IN
B8
YEL/WHT
RR-OUT
B3
Vcc
SCS
A14
BRN
PCM (SCS)
DATA LINK CONNECTOR (16P)
+B
WHT/GRN
BLK
BRN/BLK
PCM (DLC)
LT BLU
DLC
A22
TXD
RXD
G101 G401
FLW(+)
GRN/BLU
FLW(−)
BRN
FRW(+)
GRN/BLK
FRW(−)
GRN
RLW(+)
LT BLU
RLW(−)
GRY
RRW(+)
GRN/YEL
RRW(−)
BLU/YEL
WHEEL SENSOR
LEFT-FRONT
RIGHT-FRONT
LEFT-REAR
RIGHT-REAR
GND1
GND2
GND3
GND4
BLK
G204
G205

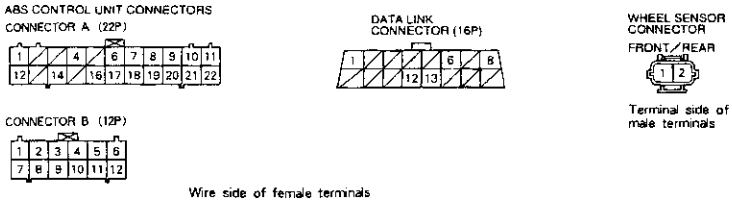
ABS CONTROL UNIT CONNECTORS
CONNECTOR A (22P)
CONNECTOR B (12P)
DATA LINK CONNECTOR (16P)
WHEEL SENSOR CONNECTOR
FRONT/REAR
Terminal side of male terminals
Wire side of female terminals

DTC Troubleshooting

DTC 52: Motor Stuck OFF

1. Check the ABS MOTOR (30 A) fuse in the under-hood fuse/relay box, and reinstall the fuse if it is OK.

   Is the fuse OK?

   YES – Go to step 3. ■

   NO – Replace the fuse, and go to step 2.

2. Connect the pump motor relay connector terminal No. 3 to No. 4 with a jumper wire for a moment, and check the fuse.

   PUMP MOTOR RELAY CONNECTOR

   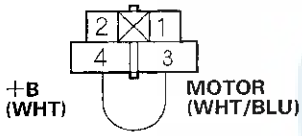

   JUMPER WIRE

   Terminal side of female terminals

   Is the fuse blown?

   YES – Check for a short to body ground in the motor power source circuit. ■

   NO – Go to step 3.

3. Check the ABS MTR CHK (7.5 A) fuse in the passenger's under-dash fuse/relay box, and reinstall the fuse if it is OK.

   Is the fuse OK?

   YES – Go to step 5.

   NO – Replace the fuse, and go to step 4.

4. Connect the pump motor relay connector terminal No. 3 to No. 4 with a jumper wire for a moment, and check the fuse.

   PUMP MOTOR RELAY CONNECTOR

   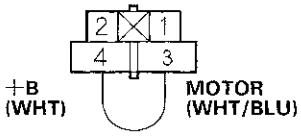

   JUMPER WIRE

   Terminal side of female terminals

   Is the fuse blown?

   YES – Check for a short to body ground in the MCK circuit. ■

   NO – Go to step 5.

5. Check the pump motor relay in the under-hood ABS relay box, refer to the '98-01 Accord Service Manual (see page 22-52).

   Is the relay OK?

   YES – Go to step 6.

   NO – Replace the pump motor relay. ■

6. Connect the pump motor relay connector terminal No. 3 to No. 4 with a jumper wire for a moment.

   Does the pump motor operate?

   YES – Go to step 11.

   NO – Go to step 7.

7. Disconnect the pump motor connector.

8. Connect the pump motor relay connector terminal No. 3 to No. 4 with a jumper wire.

9. Measure the voltage between the pump motor connector terminal No. 1 and body ground.

PUMP MOTOR CONNECTOR

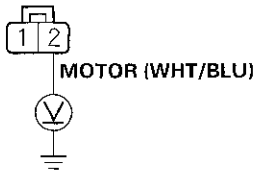

Terminal side of female terminals

Is there battery voltage?

YES – Go to step 10.

NO – Repair open in the wire between the under-hood ABS relay box and the pump motor. ■

10. Measure the voltage between the pump motor connector terminal No. 1 and No. 2.

PUMP MOTOR CONNECTOR

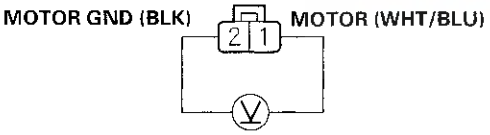

Terminal side of female terminals

Is there battery voltage?

YES – Replace the modulator unit. ■

NO – Repair open in the wire between the pump motor and body ground (G203). ■

11. Disconnect the ABS control unit connector B (12P).

12. Connect the pump motor relay connector terminal No. 1 to No. 4 with a jumper wire.

PUMP MOTOR RELAY CONNECTOR

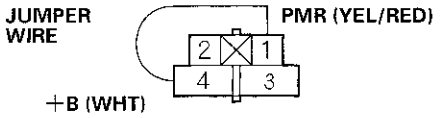

Terminal side of female terminals

13. Measure the voltage between the ABS control unit connector terminal B12 and body ground.

ABS CONTROL UNIT CONNECTOR B (12P)

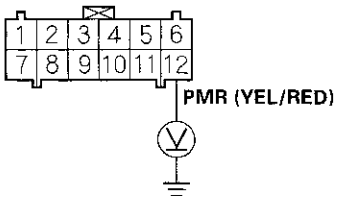

Wire side of female terminals

Is there battery voltage?

YES – Go to step 14.

NO – Repair open in the wire between the under-hood ABS relay box and the ABS control unit. ■

(cont'd)

DTC Troubleshooting (cont'd)

14. Remove the jumper wire from the pump motor relay connector.

15. Start the engine.

16. Measure the voltage between the ABS control unit connector terminal B12 and body ground.

ABS CONTROL UNIT CONNECTOR B (12P)

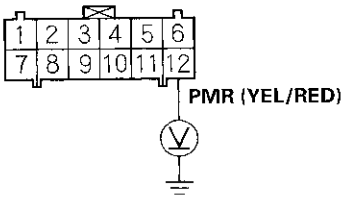

Wire side of female terminals

Is there battery voltage?

YES – Repair a short to power in the wire between the under-hood ABS relay box and the ABS control unit. ■

NO – If the problem recurs, replace the ABS control unit. ■

DTC 53: Motor Stuck ON

1. Check that the pump motor operates with the ignition switch OFF.

   Does the pump motor operate?

   YES – Replace the pump motor relay. (Pump motor relay stuck ON.) ■

   NO – Go to step 2.

2. Remove the ABS MTR CHK (7.5 A) fuse in the passenger's under-dash fuse/relay box.

   Is the fuse OK?

   YES – Remove the fuse, and go to step 3.

   NO – Replace the fuse, and recheck. ■

3. Turn the ignition switch ON (II).

4. Measure the voltage between the passenger's under-dash fuse/relay box 16P connector terminal No. 5 and body ground.

PASSENGER'S UNDER-DASH FUSE/RELAY BOX 16P CONNECTOR

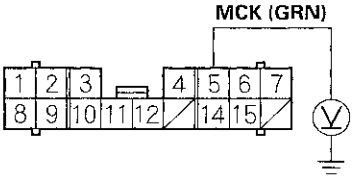

Wire side of female terminals

Is there approx. 10 V?

YES – Go to step 5.

NO – Repair open in the wire between the passenger's under-dash fuse/relay box and the ABS control unit. ■

5. Reinstall the ABS MTR CHK (7.5 A) fuse in the passenger's under-dash fuse/relay box.

6. Disconnect the pump motor connector.

7. Measure the voltage between terminal No. 1 and body ground.

PUMP MOTOR CONNECTOR

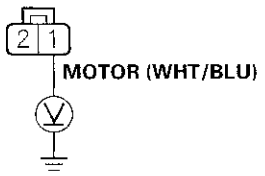

Terminal side of female terminals

Is there approx. 10 V?

YES – Go to step 8.

NO – Repair open in the wire between the under-hood ABS relay box and the pump motor. ■

8. Measure the voltage between the pump motor connector terminal No. 1 and No. 2.

PUMP MOTOR CONNECTOR

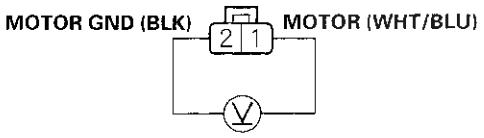

Terminal side of female terminals

Is there approx. 10 V?

YES – Go to step 9.

NO – Repair open in the wire between the pump motor and body ground (G203). ■

9. Remove the pump motor relay.

10. Disconnect the ABS control unit connector B (12P).

11. Check for continuity between terminal B12 and body ground.

ABS CONTROL UNIT CONNECTOR B (12P)

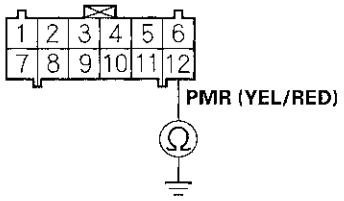

Wire side of female terminals

Is there continuity?

YES – Repair short to body ground in the wire between the under-hood ABS relay box and the ABS control unit. ■

NO – If the problem recurs, replace the ABS control unit. ■

ABS Indicator Circuit Troubleshooting

1. Turn the ignition switch ON(II), and watch the ABS indicator.

   Does the ABS indicator come on?

   NO - Go to step 2.

   YES -- If the ABS indicator comes on and goes off, it's OK. If the ABS indicator stays on, go to step 13.

2. Turn the ignition switch OFF then ON (II) again.

   Does the brake system indicator come on?

   YES — Go to step 3.

   NO — Repair open in the brake system indicator circuit. ■

   - Blown BACK-UP LIGHT (7.5 A) fuse.
   - Open in the wire between the BACK-UP LIGHT (7.5 A) fuse and the gauge assembly.
   - Open circuit inside the fuse box.

3. Turn the ignition switch OFF.

4. Disconnect the ABS control unit connector B (12P).

5. Turn the ignition switch ON (II).

   Does the ABS indicator come on?

   YES -- Check for loose ABS control unit connectors. If necessary, substitute a known-good ABS control unit and recheck. ■

   NO - Go to step 6.

6. Check the ABS indicator bulb in the gauge assembly.

   Is the bulb OK?

   YES - Go to step 7.

   NO Replace the ABS indicator bulb. ■

7. Turn the ignition switch OFF.

8. Disconnect the gauge assembly 16P connector.

9. Check for continuity between the gauge assembly 16P connector terminal No.10 and body ground.

GAUGE ASSEMBLY 16P CONNECTOR

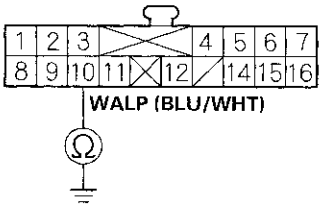

Wire side of female terminals

   Is there continuity?

   YES - Repair short to body ground in the wire between the gauge assembly and the ABS control unit. ■

   NO — Go to step 10.

10. Connect the gauge assembly 16P connector.

11. Connect the gauge assembly 22P connector terminal No. 16 to body ground with a jumper wire.

12. Turn the ignition switch ON (II).

GAUGE ASSEMBLY 22P CONNECTOR

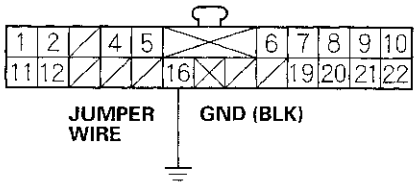

Wire side of female terminals

   Does the ABS indicator come on?

   YES — Repair open in the wire between the gauge assembly and body ground (G501). ■

   NO — Replace the printed circuit board in the gauge assembly. ■

13. Check the POWER MIRROR (7.5 A) fuse in the under-dash driver's fuse/relay box, and reinstall the fuse if it is OK.

    Is the fuse OK?

    YES—Go to step 14.

    NO—Replace the fuse, and recheck.■

14. Connect the ABS control unit connector terminal A1 to body ground with a jumper wire.

ABS CONTROL UNIT CONNECTOR A (22P)

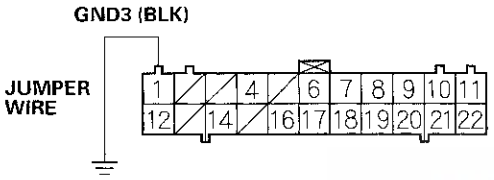

Wire side of female terminals

15. Turn the ignition switch ON (II).

    Does the ABS indicator go off?

    YES—Repair open in the wire between the ABS control unit and body ground (G204).■

    NO—Go to step 16.

16. Measure the voltage between the ABS control unit connector terminal A11 and body ground.

ABS CONTROL UNIT CONNECTOR A (22P)

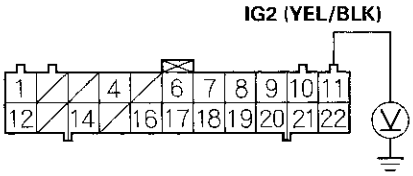

Wire side of female terminals

Is there battery voltage?

YES—Go to step 17.

NO—Repair open in the wire between the POWER MIRROR (7.5 A) fuse and the ABS control unit.■

17. Connect the ABS control unit connector terminal B1 to body ground with a jumper wire.

ABS CONTROL UNIT CONNECTOR B (12P)

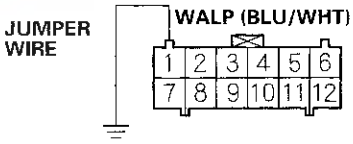

Wire side of female terminals

Does the ABS indicator go off?

YES—Check for loose ABS control unit connectors. If necessary, substitute a known-good ABS control unit, and recheck.■

NO—Go to step 18.

(cont'd)

ABS Indicator Circuit Troubleshooting (cont'd)

18. Connect the gauge assembly 16P connector terminal No. 10 to body ground with a jumper wire.

GAUGE ASSEMBLY 16P CONNECTOR

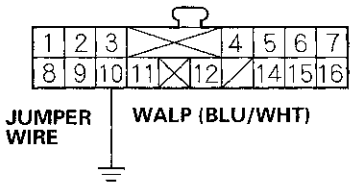

Wire side of female terminals

Does the ABS indicator go off?

YES—Repair open in the wire between the gauge assembly and the ABS control unit. ■

NO—Replace the printed circuit board in the gauge assembly. ■

Modulator Unit Removal and Installation

NOTE:
- Do not spill brake fluid on the vehicle; it may damage the paint; if brake fluid does contact the paint, wash it off immediately with water.
- Take care not to damage or deform the brake lines during removal and installation.
- To prevent the brake fluid from flowing, plug and cover the hose ends and joints with a shop towel.

Removal

1. Disconnect the modulator unit connector (B) and the pump motor connector (A).

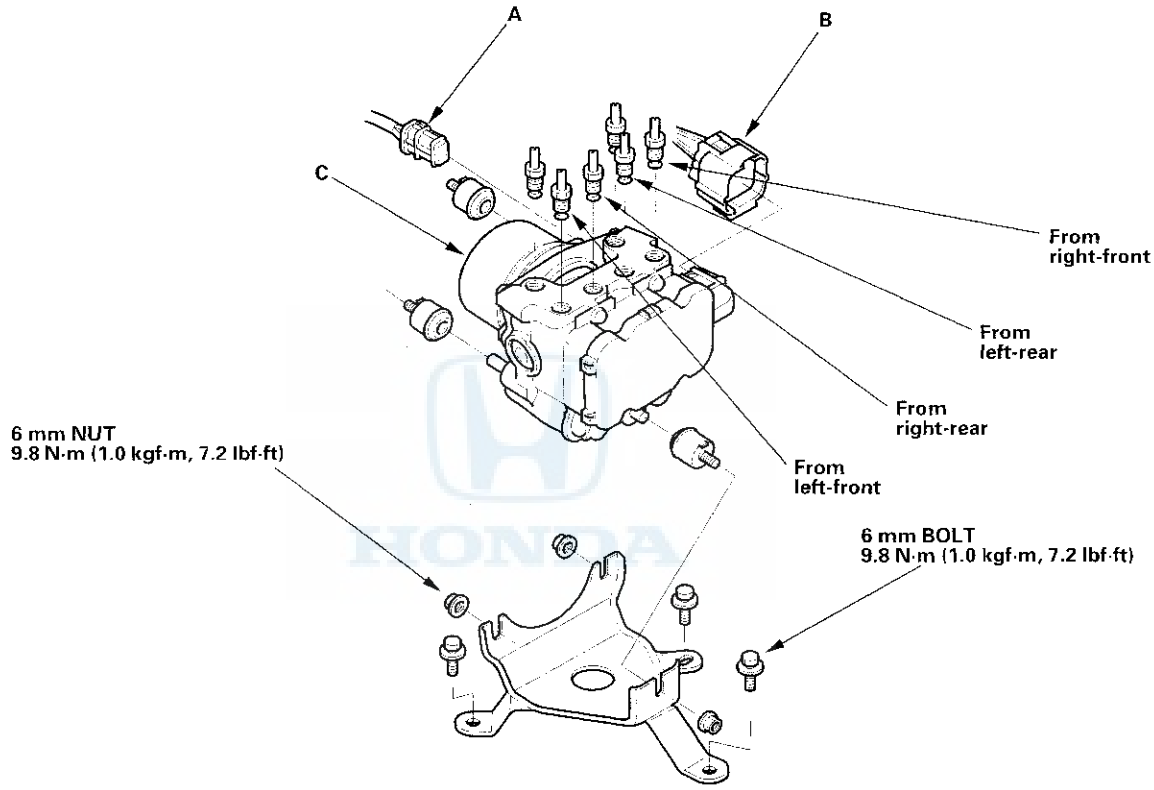

2. Disconnect the brake lines, then remove the modulator unit (C).

Installation

3. Install the modulator unit, then connect the brake lines. Tighten the flare nuts to 15 N·m (1.5 kgf·m, 11 lbf·ft).
4. Connect the modulator unit connector and the pump motor connector.
5. Bleed the brake system, starting with the front wheels.
6. Start the engine, and check that the ABS indicator goes off.
7. Test-drive the vehicle, and check that the ABS indicator does not come on.

ABS Control Unit Replacement

1. Remove the passenger's side kick panel.
2. Disconnect the ABS control unit connectors.

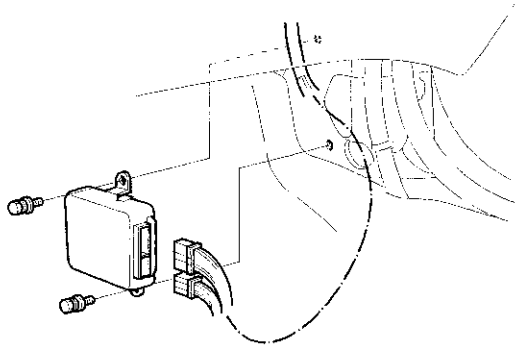

3. Remove the ABS control unit.
4. Install the ABS control unit in the reverse order of removal.

Brakes

ABS/TCS Components ('01 Model)

Outline of V6 Model Changes

- The ABS has been changed to ABS/TCS; troubleshooting was added.

ABS/TCS Components

Component Location Index

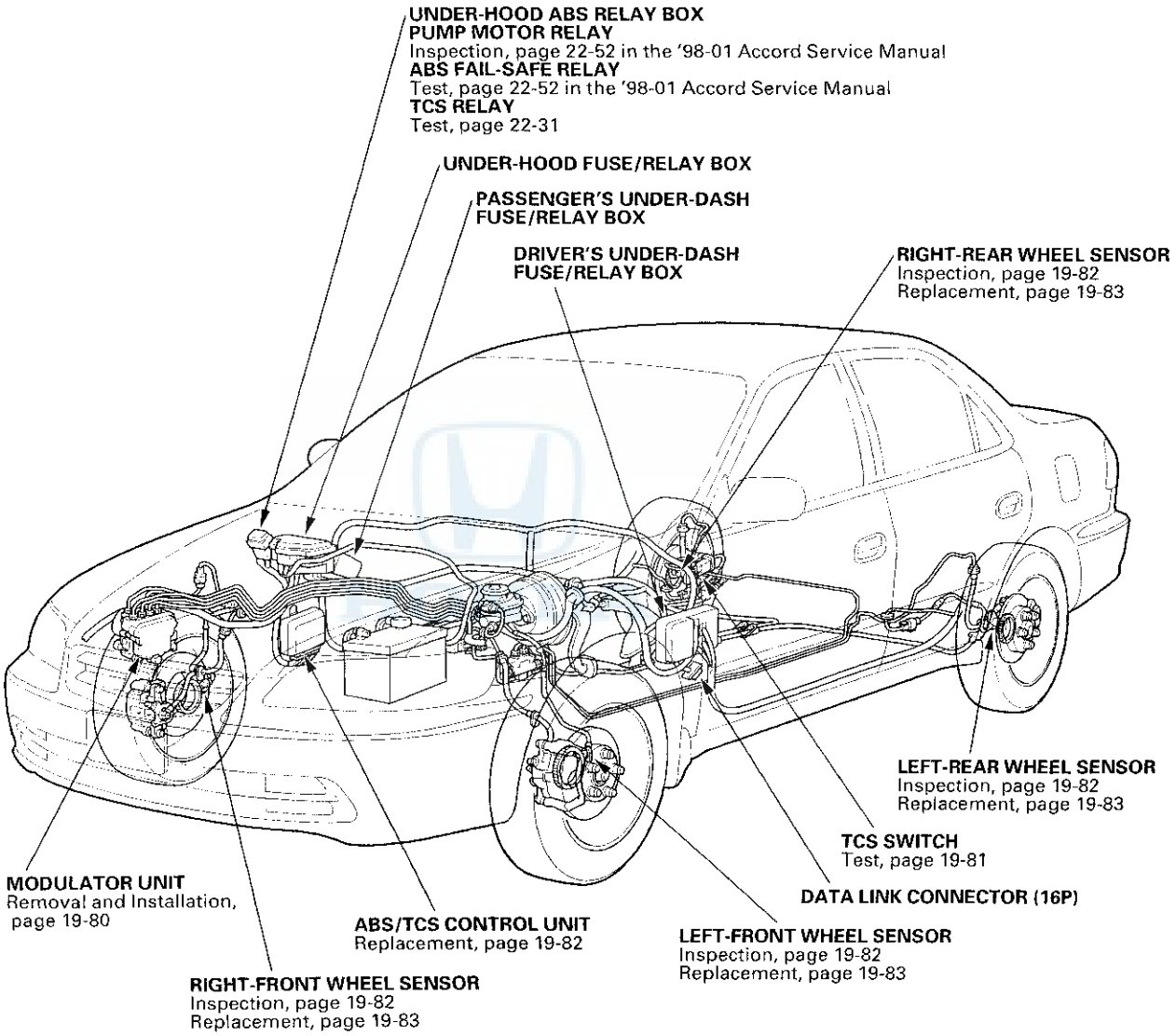

General Troubleshooting Information

ABS/TCS Indicators

- If the system is OK, the ABS indicator goes off once after turning the ignition switch ON(II) without starting the engine, and then comes on again and goes off several seconds later after starting the engine. This occurs because the ABS/TCS control unit is turned on by the IG2 power source.
- The TCS or ABS indicator comes on when the ABS/TCS control unit detects a problem in the system. However, even though the system is operating properly, the TCS or ABS indicator will come on, under the following conditions:
- **For ABS or TCS Indicator:**
  - Only drive wheels rotate
  - One drive wheel is stuck
  - The vehicle goes into a spin.
  - The ABS continues to operate for a long time.
  - The vehicle is subjected to an electrical signal disturbance.
- **For TCS Indicator:**
  - The TCS operated when the front brake pad temperature rises excessively.
  - The TCS switch is OFF.
  - One or more of these components are faulty: Heated oxygen sensor, Manifold absolute pressure sensor, Crankshaft position sensor, Engine coolant temperature sensor, Throttle position sensor, Top dead center sensor, Top dead center sensor 2, Intake air temperature sensor, Exhaust gas recirculation, Barometric pressure sensor, Idle air control valve, VTEC pressure switch, Knock sensor, Fuel supply system, Automatic transaxle, Misfire detection system of the PGM-FI system.

To determine the actual cause of the problem, question the customer about the problem, taking these conditions into consideration:

- When a problem is detected and the ABS or TCS indicator comes on, there are cases when the indicator stays on until the ignition switch is turned OFF, and cases when the indicator goes off automatically when the system returns to normal. For ABS DTCs 61 and 62, the indicator goes off automatically when the system returns to normal. For all other codes, the indicator stays on until the ignition switch is turned OFF.
- For ABS DTCs 12, 14, 16, 18, 21, 22, 23, 24, 51, 52 and 53, the ABS indicator goes off when the vehicle is driven again and the system is OK after the ignition switch is turned from OFF to ON (II). However, if the DTC is cleared, the CPU resets and the indicator goes off right after the engine is started if the system is OK.
- The ABS is not operational when the ABS indicator is ON; the TCS is not operational when the TCS indicator is ON.
- When the ABS and TCS indicators are both ON, troubleshoot the ABS first.
- When the TCS indicator and MIL are both ON, troubleshoot the PGM-FI system first.

Diagnostic Trouble Code (DTC)

- The memory can hold any number of DTCs. However, when the same DTC is detected more than once, the more recent DTC is written over the earlier one . Therefore, when the same problem is detected repeatedly, it is memorized as a single DTC.
- The DTCs are indicated in ascending number order, not in the order they occur.
- The DTCs are memorized in the EEPROM (non-volatile memory). Therefore, the memorized DTCs cannot be canceled by disconnecting the battery. Perform the specified procedures to clear the DTCs.

Self-diagnosis

- Self-diagnosis can be classified into 2 categories:
  - Initial diagnosis: Performed right after the engine starts and until the ABS or TCS indicator goes off.
  - Regular diagnosis: Performed right after the initial diagnosis until the ignition switch is turned OFF.
- When a problem is detected by self-diagnosis,the ABS/TCS control unit shifts to fail-safe mode.

Kickback

The pump motor operates when the ABS is functioning, and the fluid in the reservoir is forced out to the master cylinder, causing kickback at the brake pedal.

Pump Motor

- The pump motor operates when the ABS is functioning.
- The ABS/TCS control unit checks the pump motor operation during initial diagnosis when the vehicle is started. You may hear the motor operate at this time, but it is normal.

Brake Fluid Replacement/Air Bleeding

Brake fluid replacement and air bleeding procedures are identical to the procedures used on vehicles not equipped with ABS/TCS. To ease bleeding, start with the front wheels.

(cont'd)

General Troubleshooting Information (cont'd)

How to Troubleshoot ABS and TCS DTCs

The troubleshooting flowchart procedures assume that the cause of the problem is still present and the ABS and/or TCS indicator is still on. Following the flowchart when the ABS and/or TCS indicator does not come on can result in incorrect diagnosis.
The connector illustrations show the female terminal connectors with a single outline and the male terminal connectors with a double outline.

1. Question the customer about the conditions when the problem occured, and try to reproduce the same conditions for troubleshooting. Find out when the ABS and/or TCS indicator came on, such as during ABS control, after ABS control, when vehicle speed was at a certain speed, etc.

2. When the ABS or TCS indicator does not come on during the test drive, but troubleshooting is performed based on the DTC, check for loose connectors, poor contact of the terminals, etc. before you start troubleshooting.

3. After troubleshooting, clear the DTCs, and test-drive the vehicle. Make sure the ABS and TCS indicators do not come on.

How to Retrieve ABS or TCS DTCs

Using the Honda PGM Tester:

1. With the ignition switch OFF, connect the Honda PGM Tester (A) to the 16P Data Link Connector (DLC) (B) behind the driver's side kick panel.

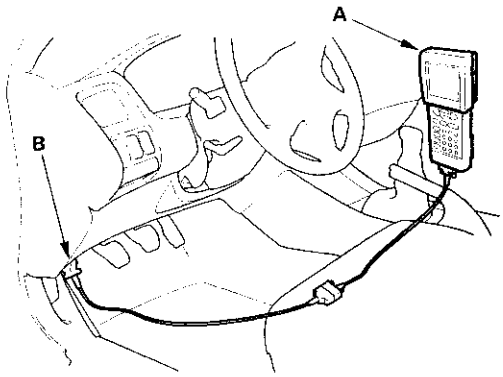

2. Turn the ignition switch ON (II), and follow the prompts on the Honda PGM Tester to display the DTC(s) on the screen. After determining the DTC, refer to the DTC Troubleshooting Index.

   NOTE: See the Honda PGM Tester user's manual for specific instructions.

Shorting the Service Check Signal Circuit with the Honda PGM Tester:

1. With the ignition switch OFF, connect the Honda PGM Tester (A) to the 16P Data Link Connector (DLC) (B) behind the driver's side kick panel.

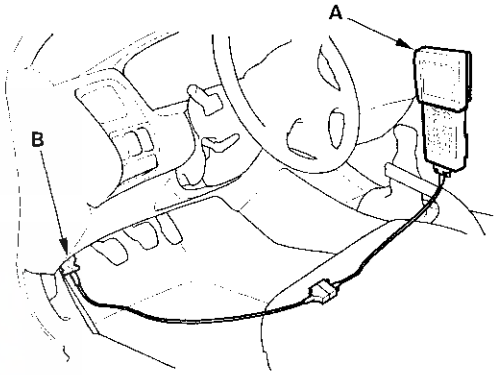

2. Short the SCS circuit to body ground using the Honda PGM Tester.

3. Turn the ignition switch ON (II) without pressing the brake pedal.

   NOTE: If the brake pedal is pressed when turning the ignition switch ON (II), the system shifts to the DTC clearing mode.

4. The blinking frequency indicates the DTC.

   NOTE: If the DTC is not memorized, the ABS or TCS indicator will go off for 3.6 seconds, and then come back on.

   The system will not indicate the DTC unless these conditions are met:
   - The TCS switch is not pushed.
   - The brake pedal is not pressed.
   - The ignition switch is turned ON (II).
   - The engine is stopped.
   - The SCS circuit is shorted to body ground before the ignition switch is turned ON (II).

Example of DTC15

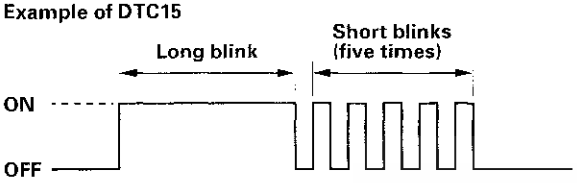

Example of DTC22

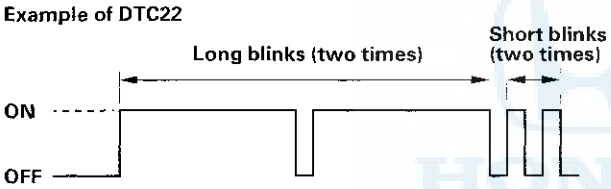

5. Turn the ignition switch OFF.

6. Disconnect the Honda PGM Tester from the DLC.

How to Clear ABS DTCs

Honda PGM Tester Method:

1. With the ignition switch OFF, connect the Honda PGM Tester (A) to the 16P Data Link Connector (DLC) (B) behind the driver's side kick panel.

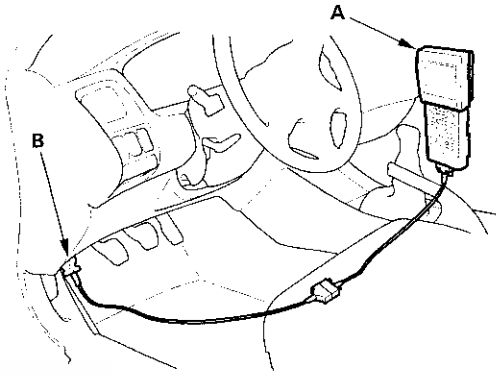

2. Turn the ignition switch ON (II), and clear the DTC (s) by following the screen prompts on the Honda PGM Tester.

   NOTE: See the Honda PGM Tester user's manual for specific instructions.

Service Check Signal Circuit Method:

1. With the ignition switch OFF, connect the Honda PGM Tester (A) to the 16P Data Link Connector (DLC) (B) behind the driver's side kick panel.

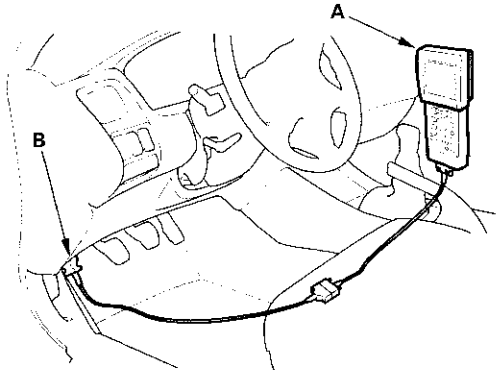

2. Short the SCS circuit to body ground using the Honda PGM Tester.

(cont'd)

General Troubleshooting Information (cont'd)

3. Press the brake pedal.

4. Turn the ignition switch ON (II) while keeping the brake pedal pressed.

5. After the ABS indicator goes off, release the brake pedal.

6. After the ABS indicator comes on, press the brake pedal again.

7. After the ABS indicator goes off, release the brake pedal again.

   You cannot clear the DTC unless these conditions are met:
   - The vehicle speed is 6 mph (10 km/h) or less.
   - The SCS circuit is shorted to body ground before the ignition switch is turned ON (II).
   - The brake pedal is pressed before the ignition switch is turned ON (II).

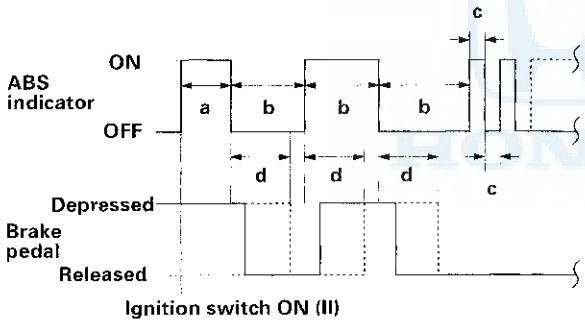

8. After a few seconds, the ABS indicator blinks twice and the DTC is cleared. If the indicator does not blink twice, repeat steps 1 through 7. If the indicator stays on after the indicator blinks twice, check the DTC because a problem was detected during initial diagnosis before shifting to DTC clearing mode.

9. Turn the ignition switch OFF.

10. Disconnect the Honda PGM Tester from the DLC.

How to Clear TCS DTCs

Honda PGM Tester Method:

1. With the ignition switch OFF, connect the Honda PGM Tester (A) to the 16P Data Link Connector (DLC) (B) behind the driver's kick panel.

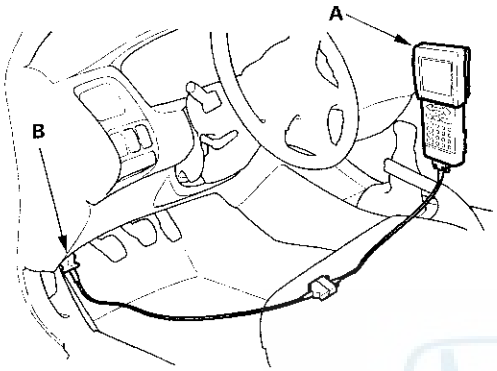

2. Turn the ignition switch ON (II), and clear the DTC (s) by following the screen prompts on the PGM Tester.

   NOTE: See the Honda PGM Tester user's manual for specific instructions.

Service Check Signal Circuit Method:

1. Press the parking brake pedal with the SCS circuit opened. Keep the pedal pressed during the entire DTC clearing procedure.
2. Press and hold the TCS switch, then turn the ignition switch ON (II) without starting the engine.
3. Continue to hold the TCS switch for four seconds, then turn the ignition switch OFF.
4. Within six seconds, turn the ignition switch back ON (II) for at least 4 seconds, then release the TCS switch, and watch the TCS indicator.
5. After a few seconds, the TCS indicator will come on after blinking to indicate that the DTC is cleared. If the indicator blinks repeatedly, repeat steps 1 through 4.
6. Turn the ignition switch OFF.

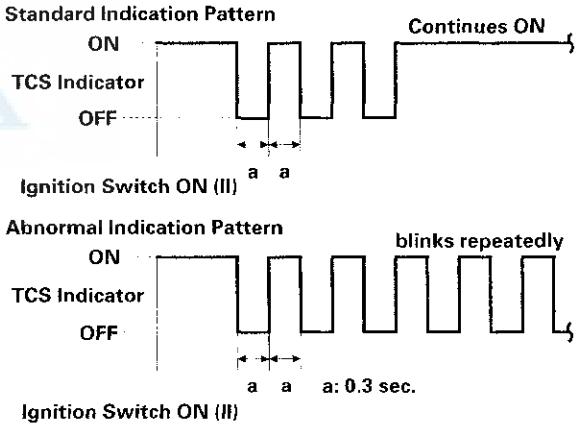

ABS/TCS Components

DTC Troubleshooting Index

ABS DTCs

DTC	Detection Item	Note
11	Right-front wheel sensor (open/short to body ground/short to power)	(see page 19-48)
12	Right-front wheel sensor (electrical noise/intermittent interruption)	(see page 19-49)
13	Left-front wheel sensor (open/short to body ground/short to power)	(see page 19-48)
14	Left-front wheel sensor (electrical noise/intermittent interruption)	(see page 19-49)
15	Right-rear wheel sensor (open/short to body ground/short to power)	(see page 19-48)
16	Right-rear wheel sensor (electrical noise/intermittent interruption)	(see page 19-49)
17	Left-rear wheel sensor (open/short to body ground/short to power)	(see page 19-48)
18	Left-rear wheel sensor (electrical noise/intermittent interruption)	(see page 19-49)
21	Right-front pulser	(see page 19-50)
22	Left-front pulser	(see page 19-50)
23	Right-rear pulser	(see page 19-50)
24	Left-rear pulser	(see page 19-50)
31	Right-front inlet solenoid	(see page 19-51)
32	Right-front outlet solenoid	(see page 19-51)
33	Left-front inlet solenoid	(see page 19-51)
34	Left-front outlet solenoid	(see page 19-51)
35	Right-rear inlet solenoid	(see page 19-51)
36	Right-rear outlet solenoid	(see page 19-51)
37	Left-rear inlet solenoid	(see page 19-51)
38	Left-rear outlet solenoid	(see page 19-51)
41	Right-front wheel lock	(see page 19-54)
42	Left-front wheel lock	(see page 19-54)
43	Right-rear wheel lock	(see page 19-54)
44	Left-rear wheel lock	(see page 19-54)
51	Motor lock	(see page 19-55)
52	Motor stuck OFF	(see page 19-55)
53	Motor stuck ON	(see page 19-57)
54	ABS Fail-safe relay	(see page 19-59)
61	Low ignition voltage	(see page 19-61)
62	High ignition voltage	(see page 19-61)
71	Different diameter tire	(see page 19-62)
81	Central Processing Unit (CPU) diagnosis, and ROM/RAM diagnosis	(see page 19-62)

TCS DTCs

DTC	Detection Item	Note
24	RF TCS NO solenoid	(see page 19-63)
25	RF TCS NC solenoid	(see page 19-63)
26	LF TCS NO solenoid	(see page 19-63)
27	LF TCS NC solenoid	(see page 19-63)
28	TCS relay	(see page 19-66)
31	Engine retard command (PFINH) signal	(see page 19-69)
32	Engine speed (NEP) signal	(see page 19-71)
34	Reference voltage (VREF) signal	(see page 19-72)
36	Throttle position sensor output (THLOUT) signal	(see page 19-73)
61	A/T shift position (ATSFTP) signal	(see page 19-74)
81	Continuous TCS operation	(see page 19-75)

Symptom Troubleshooting Index

Symptom	Diagnostic procedure	Also check for
ABS indicator does not come on	ABS indicator Circuit Troubleshooting (see page 19-76)	
ABS indicator does not go off and no DTC is stored	ABS Indicator Circuit Troubleshooting (see page 19-76)	
ABS indicator came on once, but it is OK now	The vehicle is OK at this time (see page 19-25)	
TCS indicator does not come on	ABS indicator Circuit Troubleshooting (see page 19-78)	
TCS indicator does not go off and no DTC is stored	ABS Indicator Circuit Troubleshooting (see page 19-78)	
TCS indicator came on once, but it is OK now	The vehicle is OK at this time (see page 19-25)	

ABS/TCS Components

System Description

ABS/TCS Control Unit Inputs and Outputs for Connector A (26P)

ABS/TCS CONTROL UNIT CONNECTOR A (26P)

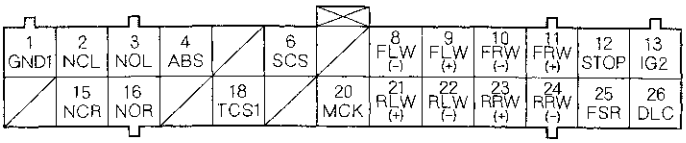

Wire side of female terminals

Terminal number	Wire color	Terminal sign (Terminal name)	Description	Measurement			
				Terminal	Conditions (Ignition switch ON (II))		Voltage
1	BLK	GND1 (Ground 1)	Ground	1-GND	———		Below 0.3 V
2	YEL/GRN	NCL (Normally closed left)	Drives left TCS normally closed solenoid valve	2-GND	TCS Indicator	OFF	Battery Voltage
3	GRY	NOL (Normally open left)	Drives left TCS normally open solenoid valve	3-GND		ON (Disconnect 16P connector to turn indicator on)	Below 0. 3V
4	BLU/WHT	ABS	Drives ABS indicator (Turns the indicator drive transistor to ON, then turns off the indicator)	4-GND	ABS indicator	ON	4 - 6 V
						OFF	Below 1.0 V
6	BRN	SCS (Service check signal)	Detects service check connector signal (Use for DTC indication)	6-GND	SCS Circuit	Shorted	Below 0.3 V
						Opened	Approx. 5 V
8	BRN	FLW (−) (Front-left wheel negative)	Detects left-front wheel sensor signal	8-9	Wheel	Turn wheel at 1 turn/second	AC: 0. 053 V or above (Reference) Oscilloscope: 0.15 Vp-p or above
9	GRN/BLU	FLW (+) (Front-left wheel positive)					
10	GRN	FRW (−) (Front-right wheel negative)	Detects right-front wheel sensor signal	10-11			
11	GRN/BLK	FRW (+) (Front-right wheel positive)				Stopped	0.25 V − 1.15 V
12	WHT/BLK	STOP	Detects brake switch signal	12-GND	Brake pedal	Pressed	Battery Voltage
						Released	Below 0.3 V
13	YEL/BLK	IG2 (Ignition 2)	Power source for activating the system	13-GND	Ignition switch	ON (II)	Battery Voltage
						Start (III)	Below 0.3 V

Terminal number	Wire color	Terminal sign (Terminal name)	Description	Measurement			
				Terminal	Conditions (Ignition switch ON (II))		Voltage
15	RED/GRN	NCR (Normally closed right)	Drives right TCS normally closed solenoid valve	15-GND	TCS indicator	OFF	Battery Voltage
16	LT BLU	NOR (Normally opened right)	Drives right TCS normally open solenoid valve	16-GND		ON (Disconnect 16P connector to turn indicator on)	Below 0.3 V
18	RED/WHT	TCS1	Drives TCS indicator (Turns the indicator drive transistor to ON, then turns off the indicator)	18-GND	TCS indicator	With engine running, and indicator OFF	Battery Voltage
						ON	Approx. 2 V
20	GRN	MCK (Motor check)	Detects pump motor drive signal	20-GND	Pump motor	ON	Battery Voltage
						OFF	Below 0.3 V
					Remove MCK fuse		Approx. 10 V
21	LT BLU	RLW (+) (Rear-left wheel positive)	Detects left-rear wheel sensor signal	21-22	Wheel	Turn wheel at 1 turn/second	AC: 0. 053V or above (Reference) Oscilloscope: 0.15 Vp-p or above
22	GRY	RLW (−) (Rear-left wheel positive)					
23	GRN/YEL	RRW (+) (Rear-right wheel positive)	Detects right-rear wheel sensor signal	23-24			
24	BLU/YEL	RRW (−) (Rear-right wheel negative)				Stopped	0.25 V− 1.15 V
25	YEL/GRN	FSR (Fail-safe relay)	Drives ABS fail-safe relay (ABS fail-safe relay is turned OFF to shut off the power source to the solenoid and pump motor relay when a problem occurs.)	25-GND	ABS (SCS circuit must be open)	Warning	Below 0.3 V
						Normal	Approx. 11V
26	LT BLU	DLC (Data link connector)	Communicates with the Honda PGM Tester	——	——		——

(cont'd)

System Description (cont'd)

ABS/TCS Control Unit Inputs and Outputs for Connector B (16P)

ABS/TCS CONTROL UNIT CONNECTOR B (16P)

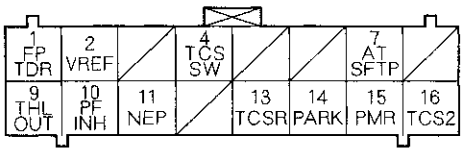

Wire side of female terminals

Terminal number	Wire color	Terminal sign (Terminal name)	Description	Measurement: Terminal	Conditions (Ignition switch ON (II))		Voltage
1	PNK	FPTDR (Frame to powertrain torque down request)	Outputs engine retard request signal	1-GND	TCS	Not operating	Approx. 2.5 V (5V, duty 50)
						Operating	Approx. 5V
2	ORN/GRN	VREF (Voltage reference)	Reference voltage for the sensors of the PGM-FI system	2-GND	——		Approx. 5V
4	ORN/WHT	TCS SW (TCS switch)	Detects TCS switch signal	4-GND	TCS switch	TCS switch pressed	Battery Voltage
						OFF (TCS indicator is ON)	0 V
7	LT GRN	ATSFTP (AT shift position)	Detects A/T shift position signal	7-GND	Shift the transmission to P, then start the engine.		Approx. 4 V
9	YEL/GRN	THLOUT (Throttle out)	Detects throttle position sensor signal	9-GND	Throttle valve	Fully closed	Approx. 0.5V
						Fully opened	Approx. 4.8V
10	BLU	PFINH (Powertrain to frame inhibition)	Detects TCS operation permission signal	10-GND	Permission (normal)		Applox. 2.5V (5V, duty 50)
					inhibition (the coolant temperature is 0°C or below)		Approx. 5 V
					Failure (TCS and/or PCM has failed)		Applox. 0 V
11	BLU	NEP (Engine speed pulse)	Detects engine speed signal	11-GND	Engine idling		Approx. 6 V
13	GRN/YEL	TCSR (TCS relay)	Drives TCS relay (TCS relay is turned OFF to shut off the power source to the TCS solenoid and pump motor relay when a problem occurs)	13-GND	TCS (SCS circuit must be opened)	Warning	Below 0.3 V
						Normal	Approx. 11 V
14	GRN/RED	PARK (Parking)	Detects parking brake switch signal	14-GND	With engine running, parking brake	Pulled	Below 0.3 V
						Released	Battery Voltage
15	YEL/RED	PMR (Pump motor relay)	Drives pump motor relay	15-GND	ABS indicator	OFF; Pump motor ON	Below 1.0 V
						OFF; Pump motor OFF	Battery Voltage
						ON	Below 0.3 V
16	RED/WHT	TCS2	Drives TCS indicator (Turns the indicator drive transistor to ON, then turns off the indicator)	16-GND	TCS indicator	OFF	Battery Voltage
						ON	Approx. 2 V

ABS/TCS Control Unit Inputs and Outputs for Connector C (12P)

ABS/TCS CONTROL UNIT CONNECTOR C (12P)

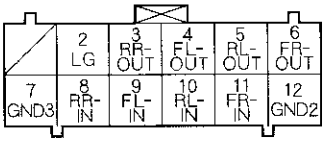

Wire side of female terminals

Terminal number	Wire color	Terminal sign (Terminal name)	Description	Measurement			
				Terminal	Conditions (Ignition switch ON (II))		Voltage
2	BRN/BLK	LG (Logic ground)	Ground for logic circuit	2-GND	—		Below 0.3 V
3	YEL/WHT	RR-OUT (Rear-right outlet)	Drives right-rear outlet solenoid valve	3-GND	ABS indicator	OFF	Battery Voltage
4	YEL/BLU	FL-OUT (Front-left outlet)	Drives left-front outlet solenoid valve	4-GND			
5	YEL/GRN	RL-OUT (Rear-left outlet)	Drives left-rear outlet solenoid valve	5-GND		ON (Disconnect 16P connector to turn indicator on)	Below 0.3 V
6	YEL/BLK	FR-OUT (Front-right outlet)	Drives right-front outlet solenoid valve	6-GND			
7	BLK	GND3 (Ground 3)	Ground	7-GND	—		Below 0.3 V
8	RED/WHT	RR-IN (Rear-right inlet)	Drives right-rear inlet solenoid valve	8-GND	ABS indicator	OFF	Battery Voltage
9	RED/BLU	FL-IN (Front-left inlet)	Drives left-front inlet solenoid valve	9-GND			
10	RED/GRN	RL-IN (Rear-left inlet)	Drives left-rear inlet solenoid valve	10-GND		ON (Disconnect 16P connector to turn indicator on)	Below 0.3 V
11	RED/BLK	FR-IN (Front-right inlet)	Drives right-front inlet solenoid valve	11-GND			
12	BLK	GND2 (Ground 2)	Ground	12-GND	—		Below 0.3 V

(cont'd)

System Description (cont'd)

Outline

This system consists of the ABS/TCS control unit, the modulator unit, four wheel sensors, and the PCM. The system integrates the ABS (Anti-lock Brake System) and the TCS (Traction Control System) and controls both systems using the brakes.

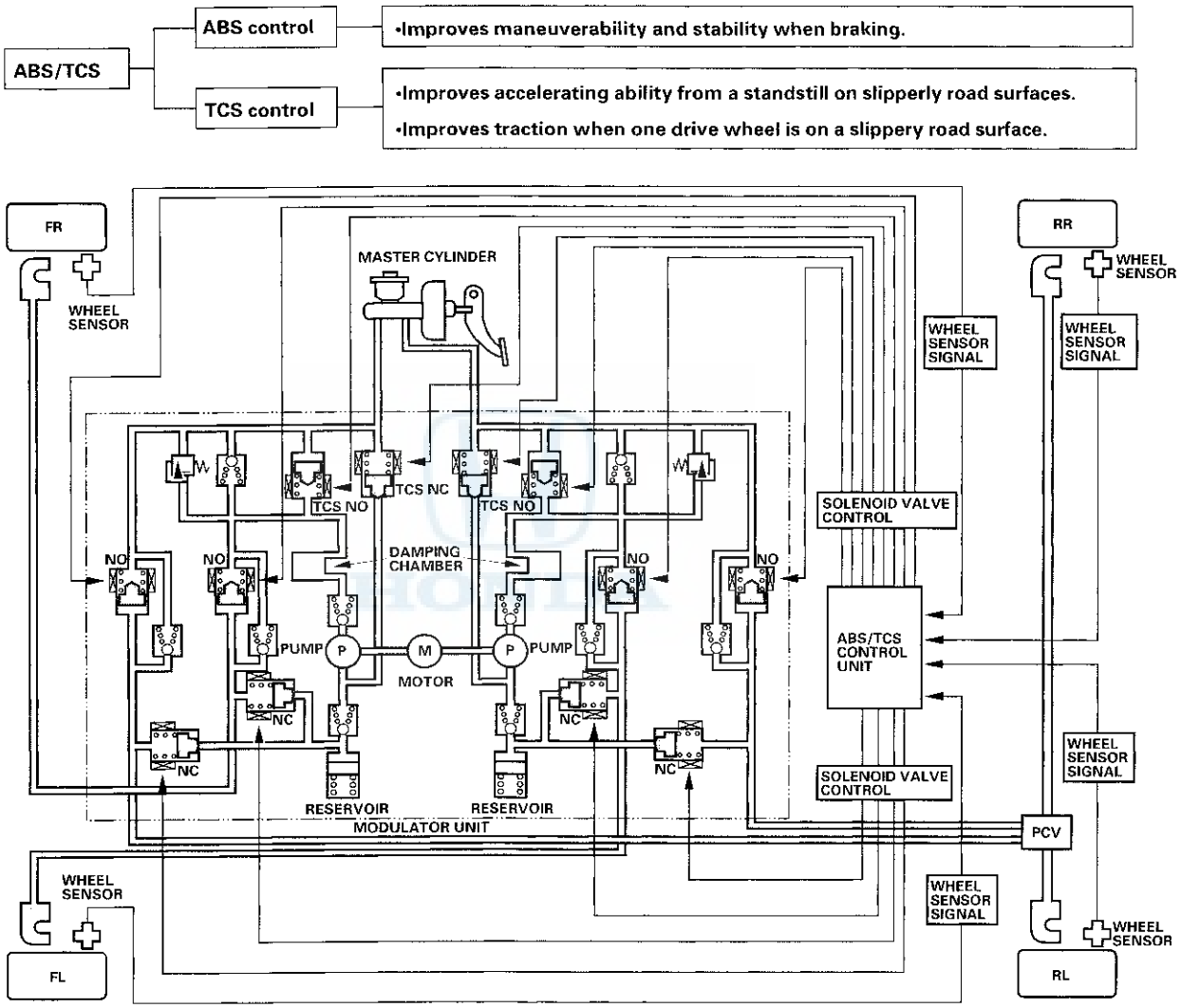

NO: Normally Open
NC: Normally Closed

ABS Features

When the brake pedal is pressed while driving, the wheels can lock before the vehicle comes to a stop. In such an event, the maneuverability of the vehicle is reduced if the front wheels are locked, and the stability of the vehicle is reduced if the rear wheels are locked, creating an extremely unstable condition. The ABS precisely controls the slip rate of the wheels to ensure maximum grip force from the tires, and it thereby ensures maneuverability and stability of the vehicle.
The ABS calculates the slip rate of the wheels based on the vehicle speed and the wheel speed, then it controls the brake fluid pressure to attain the target slip rate.

Grip Force of Tire and Road Surface

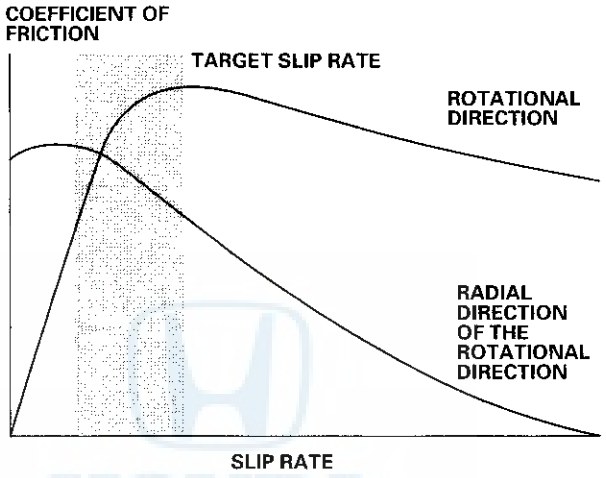

TCS Features

The TCS provides low speed traction. When a drive wheel loses traction on a slipperly road surface and starts to spin, the ABS/TCS control unit sends a brake signal to the modulator unit, which applies brake pressure to slow the spinning wheel. At that time, the ABS/TCS control unit sends an engine retard signal to the PCM to prevent damage to the transmission.

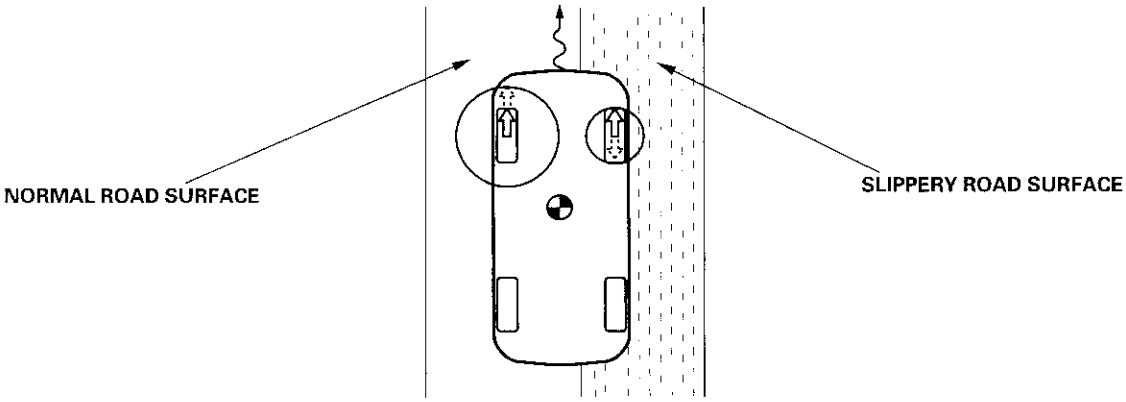

(cont'd)

System Description (cont'd)

ABS Main Control

The ABS/TCS control unit detects the wheel speed based on the wheel sensor signal it received, then it calculates the vehicle speed based on the detected wheel speed. The control unit detects the vehicle speed during deceleration based on the rate of deceleration.
The ABS/TCS control unit calculates the slip rate of each wheel, and it transmits the control signal to the modulator unit solenoid valve when the slip rate is high.
The pressure reduction control has 3 modes: pressure intensifying, pressure retaining, and pressure reducing.

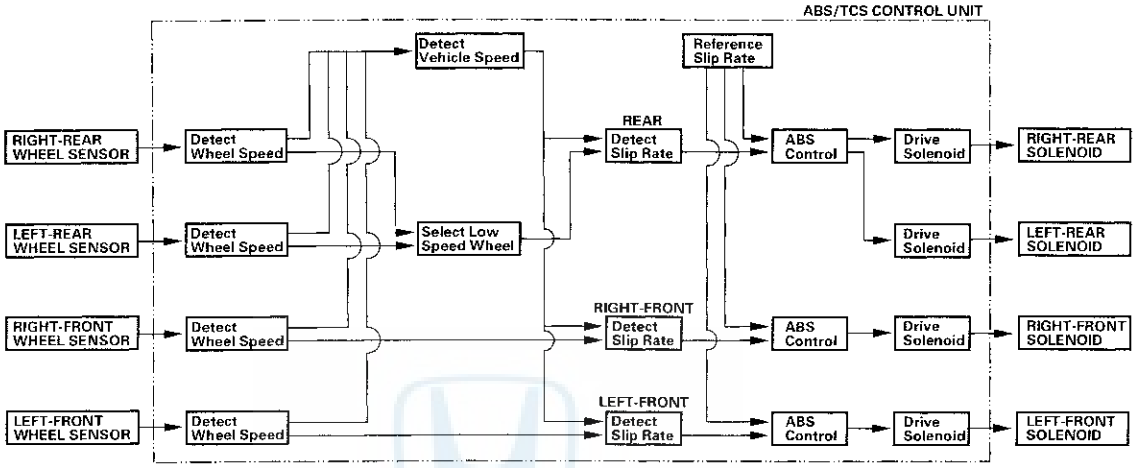

TCS Main Control

The ABS/TCS control unit controls the TCS based on signal inputs from the throttle position sensor, engine speed sensor, shift position sensor, and the wheel sensors. In addition, the ABS/TCS control unit sends an engine retard request signal to the PCM if necessary. The ABS/TCS control unit uses the modulator unit to control the TCS. The pressure intensifying control has three modes: pressure intensifying, pressure retaining, and pressure reducing.

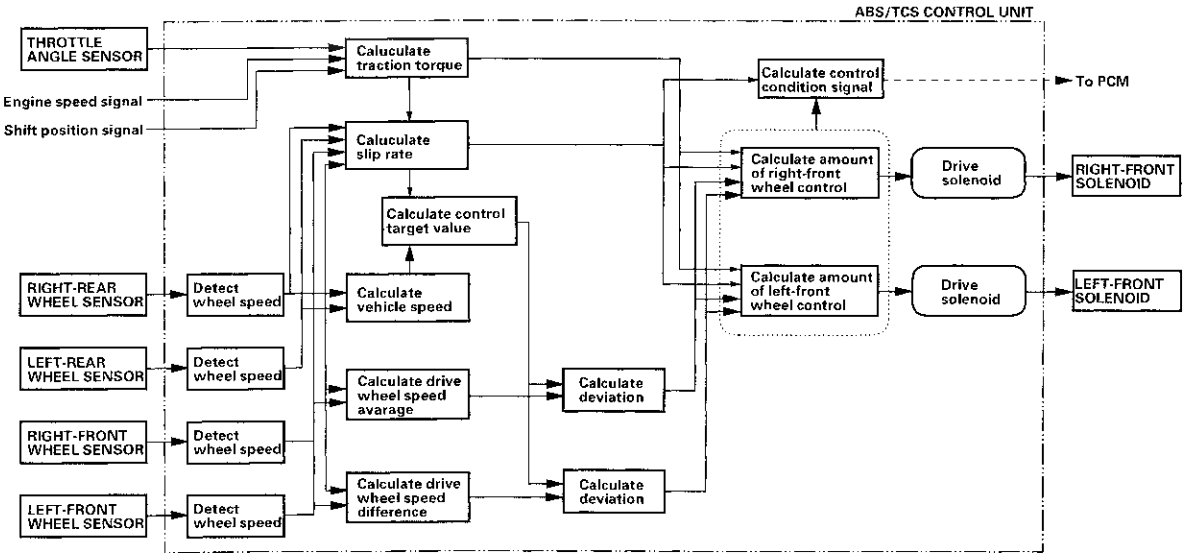

ABS Self-Diagnosis

- The ABS/TCS control unit is equipped with a main CPU and a sub CPU. Each CPU checks the other for problems.
- The CPUs check the circuit of the system.
- Self-diagnosis can be classified into 2 categories:
  - Initial diagnosis: Performed right after the engine starts and until the ABS or TCS indicator goes off.
  - Regular diagnosis: Performed right after the initial diagnosis until the ignition switch is turned OFF.
- When a problem is detected by self-diagnosis, the ABS/TCS control unit shifts to fail-safe mode.

ABS Self-diagnosis Table

Diagnostic Trouble Code (DTC)	Detection Item	Detection Timing		Fail-safe Mode
		Initial Diagnosis	Regular Diagnosis	
11, 13, 15, 17	Wheel sensor (open/short to body ground/short to power)	○	○	A0
12, 14, 16, 18	Wheel sensor (electrical noise/intermittent interruption)		○	A0, L0
21-24	Pulser		○	A0, L0
31-38	Solenoid (short to body ground/short to wire)	○	○	S1
41-44	Wheel lock		○	A0, L0
51	Motor lock		○	A0, L0
52	Motor stuck OFF		○	A0, L0
53	Motor stuck ON	○	○	A0, L0
54	Fail-safe relay	○	○	S1
61	Low ignition voltage		○	B0
62	High ignition voltage		○	B0
71	Different diameter tire		○	S1
81	Central Processing Unit (CPU), ROM/RAM	○	○	S1

ABS Operation Mode Table

Operation Mode	Description	ABS Indicator	TCS Indicator
Regular operation	Operation in normal condition	OFF	OFF
Fail-safe mode-S1	The ABS/TCS control unit turns the system off (ABS fail-safe relay off) when the control unit detects a problem.	ON	ON
Fail-safe mode-A0	If the ABS/TCS control unit detects a malfunction while the ABS or TCS is operating, it will turn off the malfunctioning component, and continue to modulate the rest of the ABS system until completing the ABS or TCS operation. At that time, the entire system will be turned off until the problem goes away.	ON	ON
Fail-safe mode-L0	The ABS/TCS control unit stores a DTC in back-up memory when it detects a problem. If a problem is detected when the ignition switch is turned ON (II), the ABS/TCS control unit will turn the system off. If the problem goes away, the ABS/TCS control unit will turn the system on again.	ON	ON
Fail-safe mode-B0	The ABS/TCS control unit will turn the system off if ignition voltage drops, and will turn it on again when ignition voltage returns to normal.	ON	ON

On-board Diagnosis Function

The ABS can be diagnosed with the Honda PGM Tester.
The ALB Checker cannot be used with this system. For air bleeding, and checking wheel sensor signals, use the Honda PGM Tester. See the Honda PGM Tester user's manuals for specific operating instructions.

(cont'd)

System Description (cont'd)

TCS Self-diagnosis

- The ABS/TCS control unit is equipped with a main CPU and a sub CPU. Each CPU checks the other for problems.
- The CPUs check the circuit of the system.
- Self-diagnosis can be classified into 2 categories:
  - Initial diagnosis: Performed right after the engine starts and until the ABS or TCS indicator goes off.
  - Regular diagnosis: Performed right after the initial diagnosis until the ignition switch is turned OFF.
- When a problem is detected by self-diagnosis, the ABS/TCS control unit shifts to fail-safe mode.

TCS Self-diagnosis Table

Diagnostic Trouble Code (DTC)	Detection Item	Detection Timing		Fail-safe Mode
		Initial Diagnosis	Regular Diagnosis	
24-27	TCS solonoid (short to body ground/short to wire)	○	○	S1
28	TCS relay	○		S1
31	Engine retard command (PFINH) signal (open/short to body ground)		○	A2
32	Engine speed(NEP)signal (open/short to body ground)		○	A2
34	Reference voltage(VREF) signal(open/short to body ground)	○	○	A2
36	Throttle position sensor output(THLOUT)signal(open/short to body ground)	○	○	A2
61	A/T shift position(ATSFTP) signal (open/short to body ground)		○	A2
81	Continuous TCS operation		○	A2

TCS Operation Mode Table

Operation Mode	Description	ABS Indicator	TCS Indicator
Regular operation	Operation in normal condition	OFF	OFF
Fail-safe mode-S1	The ABS/TCS control unit turns the system off (fail-safe relay off) when the control unit detects a problem.	ON	ON
Fail-safe mode-A2	If the ABS/TCS control unit detects a malfuction while the TCS is operating, it will turn off the malfunctioning component, and continue to modulate the rest of the TCS system until completing the TCS operation. At that time, the TCS system will be turned off.	OFF	ON
TCS deactivate mode	If the front brake pad temperature rise excessively, the ABS/TCS control unit stops the TCS system and it turns the TCS indicator on. When the brake pad temperature lowers, the ABS/TCS control unit turns off the TCS indicator and restarts the TCS system.	OFF	Comes ON when the front brake pad temperature rises excessively.
TCS OFF mode	The ABS/TCS control unit cancels the TCS system under these conditions: • If the ABS/TCS control unit detects a problem with the PGM-FI communication circuit. • The ABS system is faulty. • The TCS system is OFF. If these conditions return to normal, the ABS/TCS control unit restarts the TCS system.	ON or OFF (ON: When the ABS system is faulty)	ON

On-board Diagnosis Function

The TCS can be diagnosed with the Honda PGM Tester.
The ALB Checker cannot be used with this system. For air bleeding, and checking wheel sensor signals, use the Honda PGM Tester. See the Honda Tester user's manuals for specific operating instructions.

Modulator Unit

The modulator unit consists of the inlet solenoid valve, outlet solenoid valve, TCS normally open (NO) solenoid valve, TCS normally closed (NC) solenoid valve, reservoir, pump, pump motor, and the damping chamber.
The modulator controls the caliper fluid pressure directly. It is a circulating-type modulator because the brake fluid circulates through the caliper, the reservoir, and the master cylinder.
The hydraulic control has three modes: pressure intensifying, pressure retaining, and pressure reducing.
The hydraulic circuit is an independent four channel type, one channel for each wheel.

ABS Control

Pressure intensifying mode

TCS NO valve open, TCS NC valve closed, inlet valve open, outlet valve closed.
Master cylinder fluid is pumped out to the caliper.

Pump Motor

When starting the pressure reducing mode, the pump motor is ON. When stopping ABS operation, the pump motor is OFF.
The reservoir fluid is pumped out by the pump, though the damping chamber, to the master cylinder.

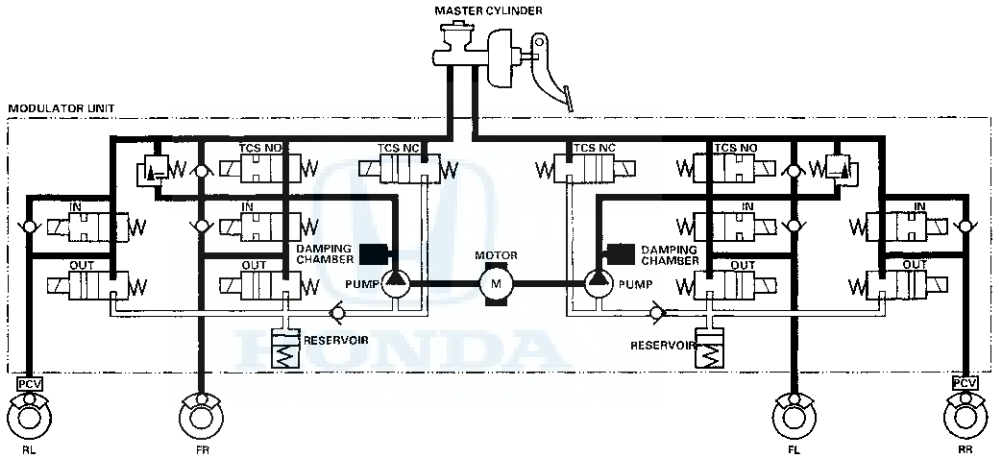

Pressure retaining mode

TCS NO valve open, TCS NC valve closed, inlet valve closed, outlet valve closed.
Caliper fluid is retained by the inlet valve and outlet valve.

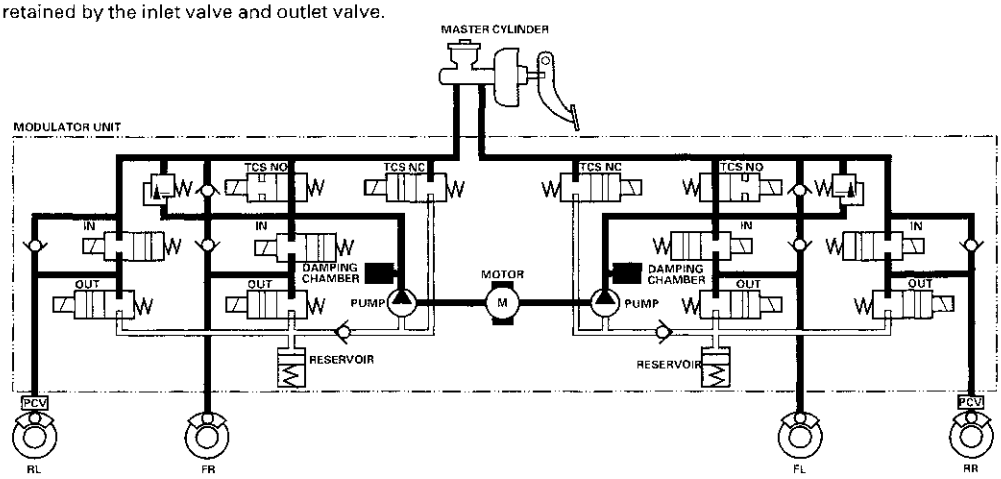

(cont'd)

System Description (cont'd)

Pressure reducing mode
TCS NO valve open, TCS NC valve closed, inlet valve closed, outlet valve open.
Caliper fluid flows through the outlet valve to the reservoir.

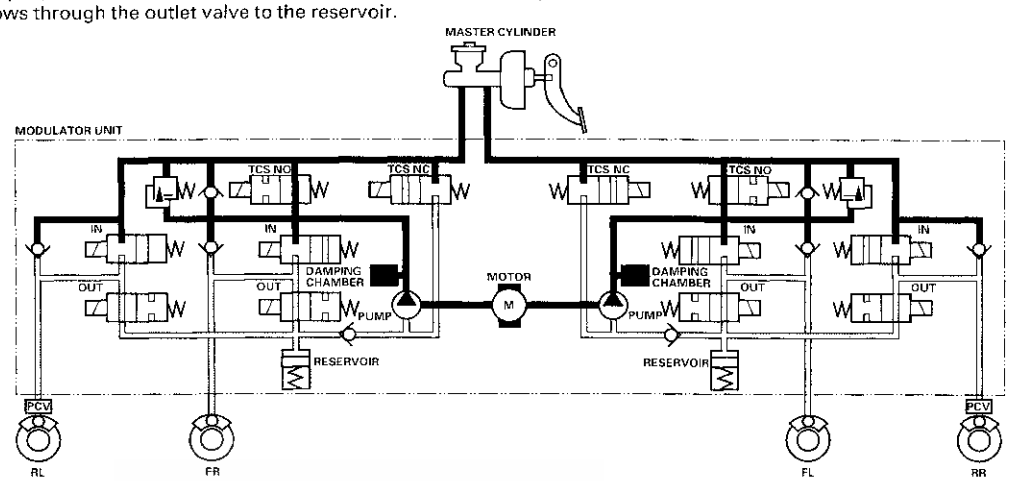

TCS Control

Pressure intensifying mode
TCS NO valve closed, TCS NC valve open, inlet valve open, outlet valve closed, pump motor ON.
The reservoir and master cylinder fluid is pumped out by the pump, through the damping chamber, to the front caliper.

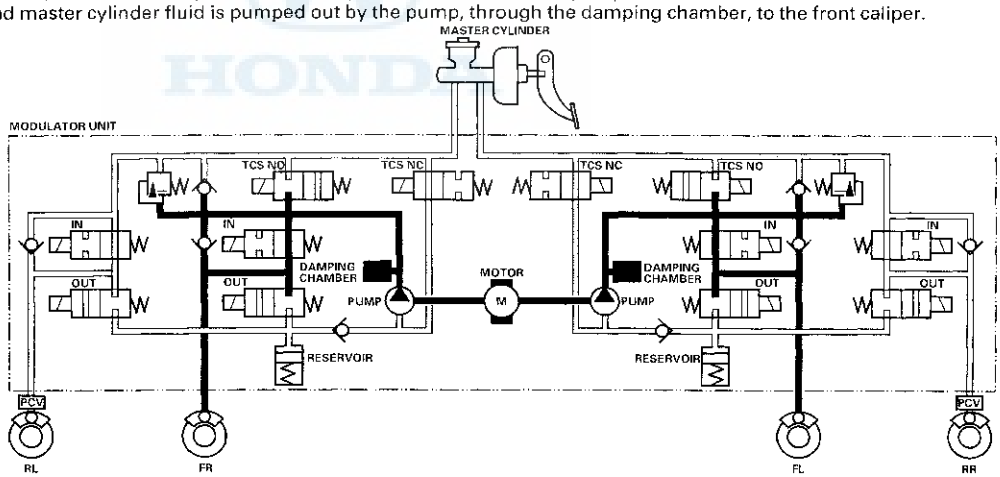

Pressure retaining mode

TCS NO valve open, TCS NC valve open, inlet valve closed, outlet valve closed, pump motor ON.
Front caliper fluid is retained by the inlet valve and outlet valve.

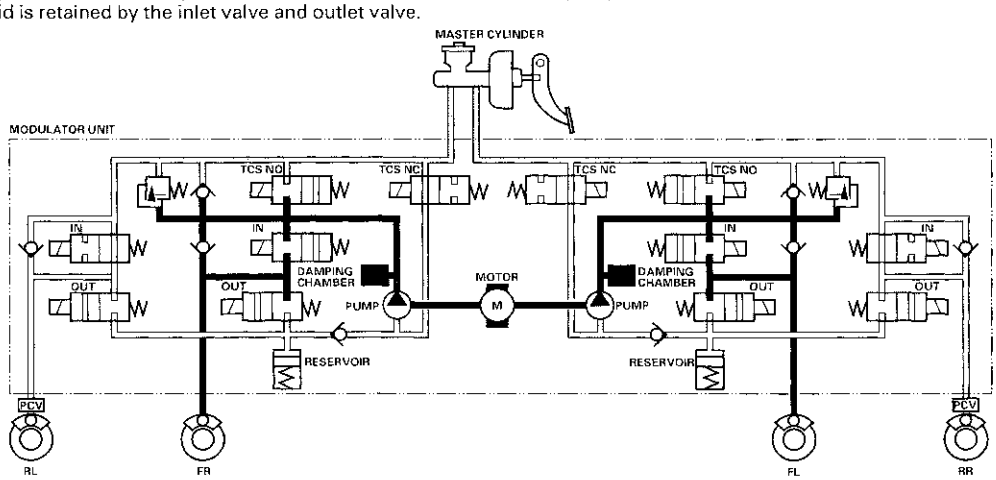

Pressure reducing mode

TCS NO valve closed, TCS NC valve open, front inlet valve closed, front outlet valve open, pump motor ON.
Caliper fluid flows through the outlet valve to the reservoir.

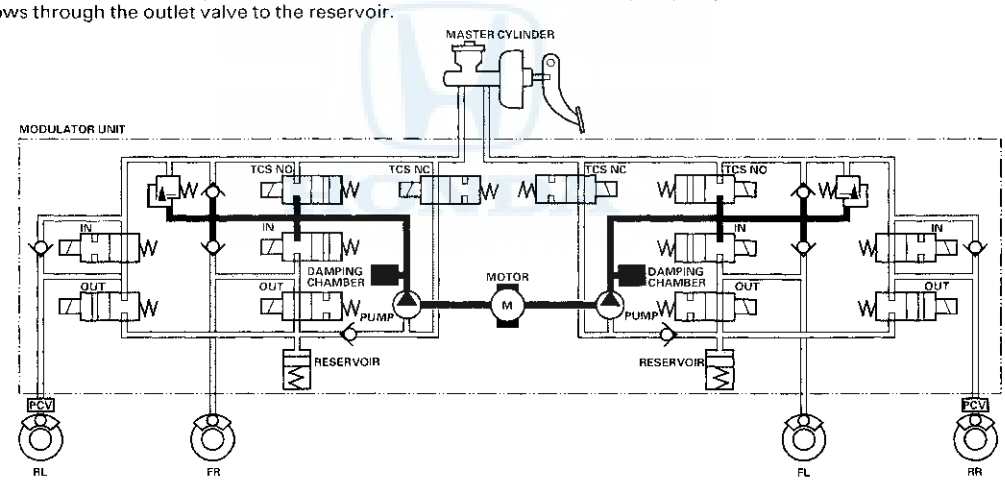

(cont'd)

System Description (cont'd)

Wheel Sensor

The wheel sensors are the magnetic contactless type. As the gear pulser teeth rotate past the wheel sensor's magnetic coil, AC current is generated. The AC frequency changes in accordance with the wheel speed. The ABS/TCS control unit detects the wheel sensor signal frequency and thereby detects the wheel speed.

Wheel Speed and Modulator Control (ABS)

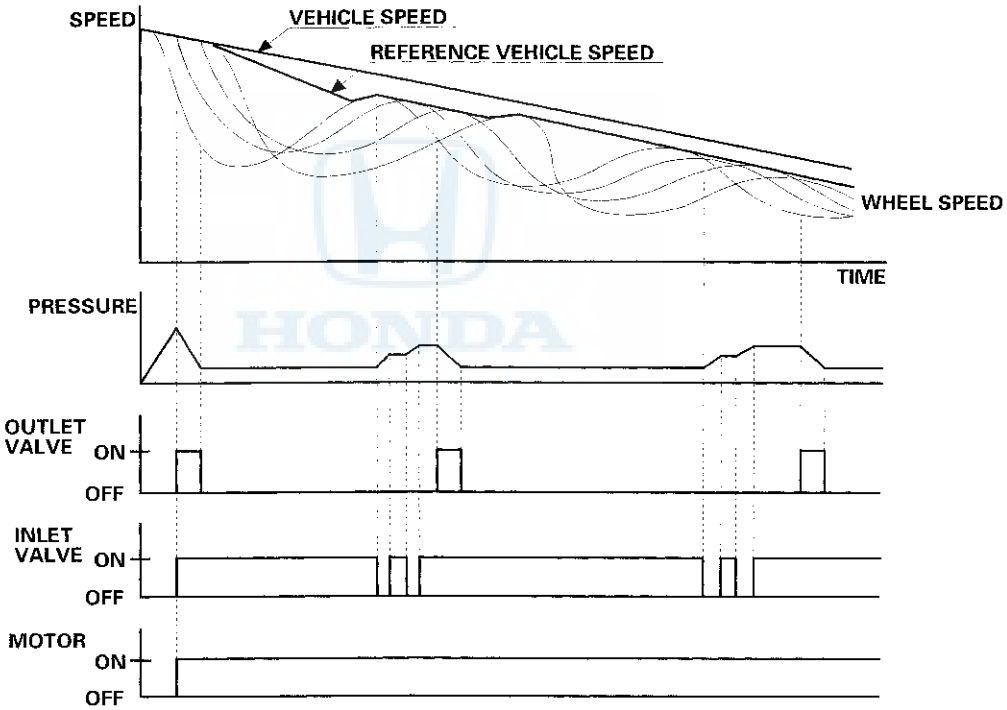

When the wheel speed drops sharply below the vehicle speed, the outlet valve opens momentarily to reduce the caliper fluid pressure. The pump motor starts at this time. As the wheel speed is restored, the inlet valve opens momentarily to increase the caliper fluid pressure.

Wheel Speed and Modulator control (TCS)

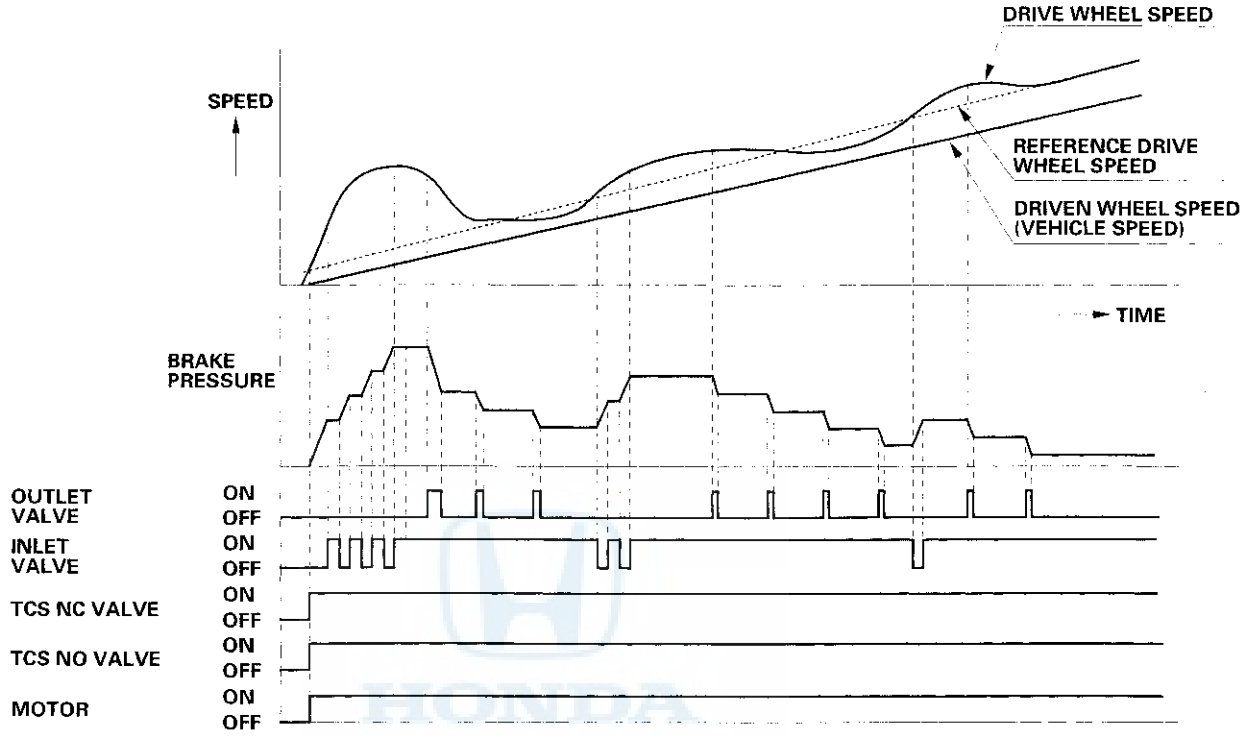

When the front wheel speed rises sharply above the vehicle speed, the TCS NC valve opens, the TCS NO valve closes, and the pump motor starts to intensify the front caliper fluid pressure. When the wheel speed drops, the front inlet valve closes momentarity to ratain the front caliper fluid pressure. When the wheel speed drops further, the front outlet valve opens momentarity to reduce the front caliper fluid pressure.

ABS/TCS Components

Circuit Diagram

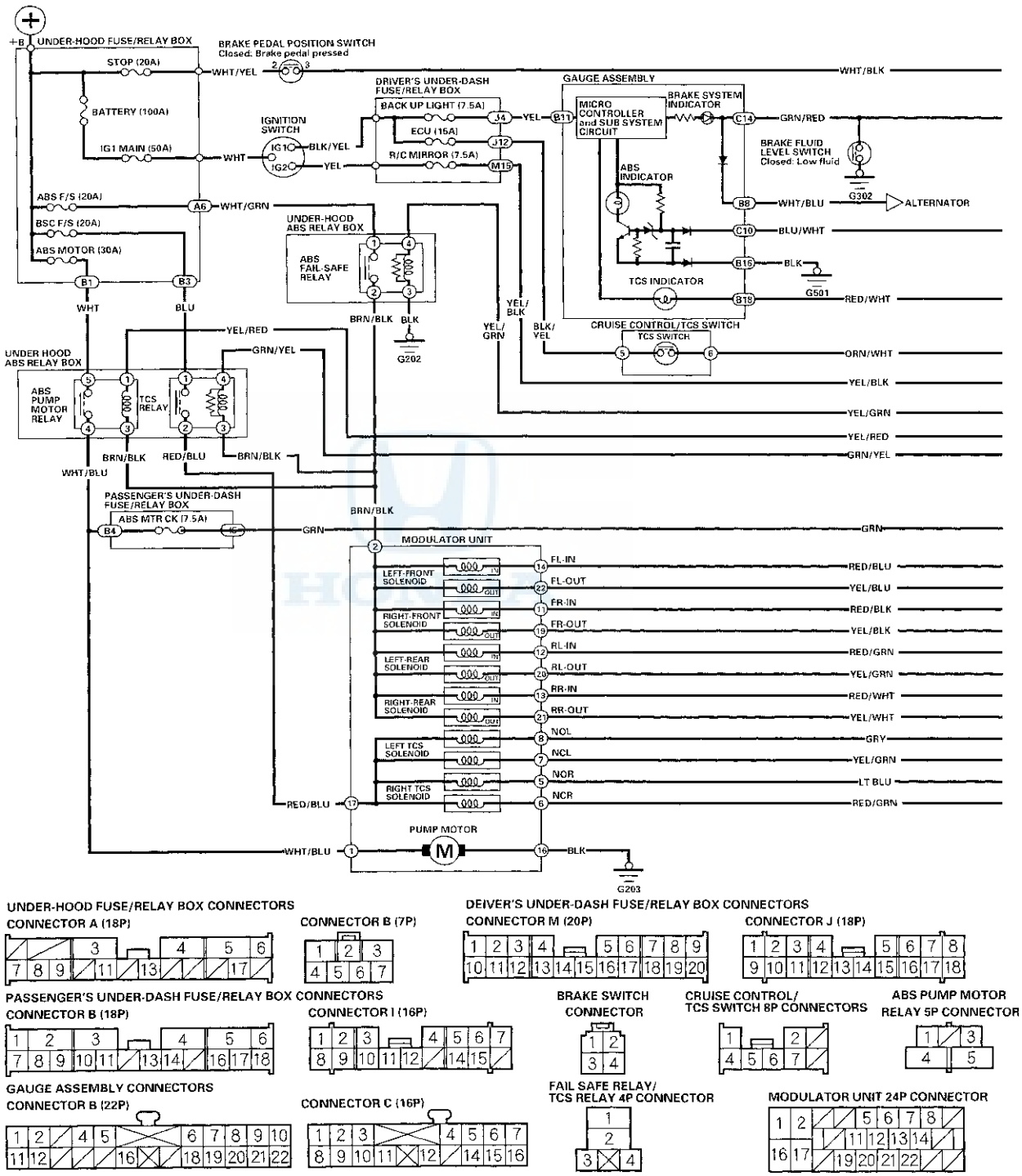

UNDER-HOOD FUSE/RELAY BOX CONNECTORS

CONNECTOR A (18P)

CONNECTOR B (7P)

DEIVER'S UNDER-DASH FUSE/RELAY BOX CONNECTORS

CONNECTOR M (20P)

CONNECTOR J (18P)

PASSENGER'S UNDER-DASH FUSE/RELAY BOX CONNECTORS

CONNECTOR B (18P)

CONNECTOR I (16P)

BRAKE SWITCH CONNECTOR

CRUISE CONTROL/ TCS SWITCH 8P CONNECTORS

ABS PUMP MOTOR RELAY 5P CONNECTOR

GAUGE ASSEMBLY CONNECTORS

CONNECTOR B (22P)

CONNECTOR C (16P)

FAIL SAFE RELAY/ TCS RELAY 4P CONNECTOR

MODULATOR UNIT 24P CONNECTOR

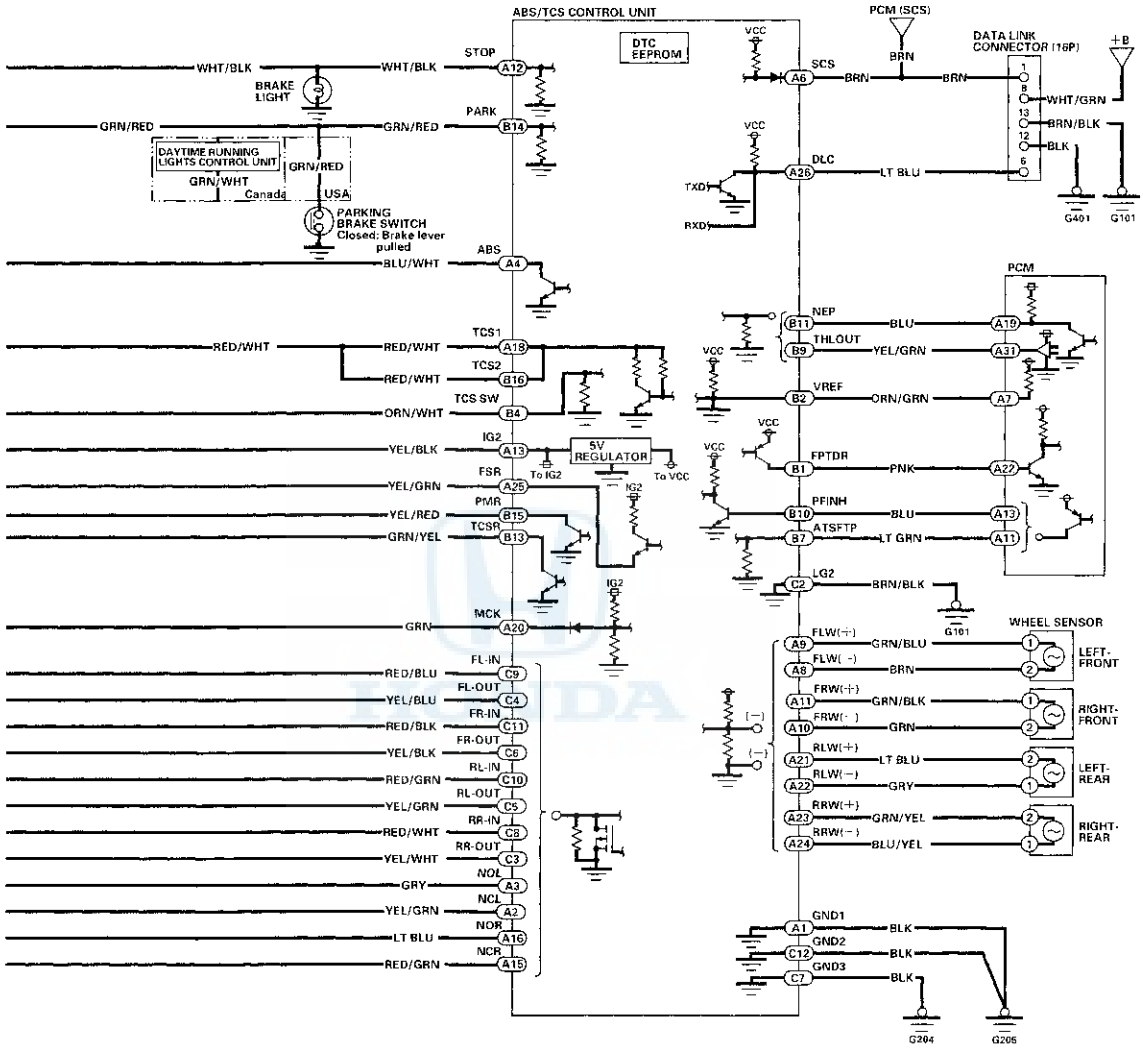

ABS/TCS CONTROL UNIT CONNECTORS

CONNECTOR A (26P)

1	2	3	4		6		8	9	10	11	12	13
	15	16		18		20	21	22	23	24	25	26

CONNECTOR B (16P)

1	2		4			7	
9	10	11		13	14	15	16

CONNECTOR C (12P)

	2	3	4	5	6
7	8	9	10	11	12

WHEEL SENSOR CONNECTOR FRONT/REAR

1	2

PCM CONNECTOR A (32P)

1	2	3	4		5	6	7		8	9	10	11
12	13	14	15	16	17	18	19	20	21	22	23	24
		25	26	27		28	29	30	31		32	

DATA LINK CONNECTOR (16P)

1					6		8
			12	13		15	

DTC Troubleshooting

ABS DTC 11, 13, 15, 17: Wheel Sensor (Open/Short to Body Ground/Short to Power)

1. Disconnect the ABS/TCS control unit connector A (26P).

2. Start the engine.

3. Measure the voltage between the appropriate wheel sensor (+) circuit terminal and body ground (see table).

DTC	Appropriate Terminal
11 (Right-front)	A11 : FRW (+)
13 (Left-front)	A9 : FLW (+)
15 (Right-rear)	A23 : RRW (+)
17 (Left-rear)	A21: RLW (+)

ABS/TCS CONTROL UNIT CONNECTOR A (26P)

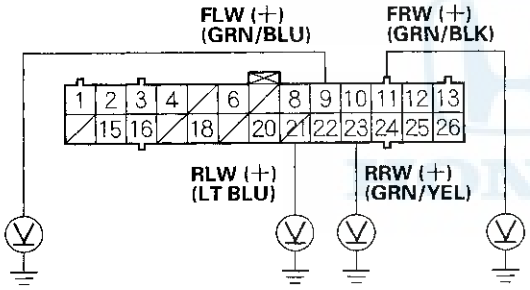

Wire side of female terminals

Is there 2 V or more?

YES – Repair short to power in the (+) circuit wire between the ABS/TCS control unit and the appropriate wheel sensor. ■

NO – Go to step 4.

4. Check for continuity between the appropriate wheel sensor (+) circuit terminal and body ground (see table).

DTC	Appropriate Terminal
11 (Right-front)	A11: FRW (+)
13 (Left-front)	A9: FLW (+)
15 (Right-rear)	A23: RRW (+)
17 (Left-rear)	A21: RLW (+)

ABS/TCS CONTROL UNIT CONNECTOR A (26P)

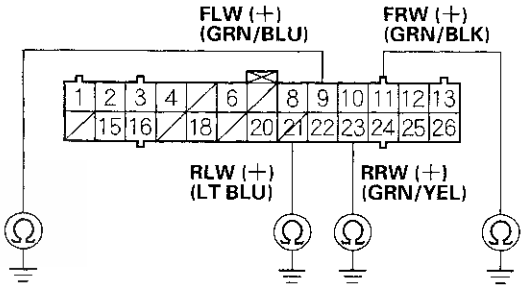

Wire side of female terminals

Is there continuity?

YES – Go to step 5.

NO – Go to step 6.

5. Disconnect the harness 2P connector from the appropriate wheel sensor, then check for continuity between the (+) and (−) terminals of the harness and body ground.

Is there continuity?

YES – Repair short to body ground in the (+) or (−) circuit wire between the ABS/TCS control unit and the wheel sensor. ■

NO – Replace the wheel sensor. ■

6. Check the resistance between the appropriate wheel sensor (+) and (−) circuit terminals (see table).

DTC	Appropriate Terminal	
	(+) Side	(−) Side
11 (Right-front)	A11 : FRW (+)	A10 : FRW (−)
13 (Left-front)	A9 : FLW (+)	A8 : FLW (−)
15 (Right-rear)	A23 : RRW (+)	A24 : RRW (−)
17 (Left-rear)	A21 : RLW (+)	A22 : RLW (−)

ABS/TCS CONTROL UNIT CONNECTOR A (26P)

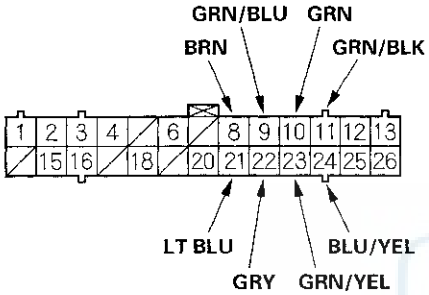

Wire side of female terminals

Is the resistance between 450 – 2,000 Ω ?

YES — Check for loose ABS/TCS control unit connectors.If necessary, substitute a known-good ABS/TCS control unit, and recheck. ■

NO — Go to step 7.

7. Disconnect the harness 2P connector from the appropriate wheel sensor, and check the resistance between the (+) and (−) terminals of the wheel sensor.

Is the resistance between 450 – 2,000 Ω ?

YES — Repair open in the (+) or (−) circuit wire, or short beween the (+) circuit wire and the (−) circuit wire between the ABS/TCS control unit and the wheel sensor. ■

NO — Replace the wheel sensor. ■

ABS DTC 12, 14, 16, 18: Wheel Sensor (Electrical Noise/Intermittent Interruption)

NOTE: If the ABS indicator comes on for the reasons described below,the indicator goes off when you test-drive the vehicle at 19 mph (30 km/h).

- Only the drive wheel rotated
- The vehicle spun
- Electrical noise

1. Visually check for appropriate wheel sensor and pulser installation (see table).

DTC	Appropriate Wheel Sensor
12	Right-front
14	Left-front
16	Right-rear
18	Left-rear

Are they installed correctly?

YES — Go to step 2.

NO — Reinstall or replace the appropriate wheel sensor or pulser. ■

2. Disconnect the ABS/TCS control unit connector A (26P).

3. Measure the resistance between the appropriate wheel sensor (+) and (−) circuit terminals (see table).

DTC	Appropriate Terminal	
	(+) Side	(−) Side
12 (Right-front)	A11 : FRW (+)	A10 : FRW (−)
14 (Left-front)	A9 : FLW (+)	A8 : FLW (−)
16 (Right-rear)	A23 : RRW (+)	A24 : RRW (−)
18 (Left-rear)	A21 : RLW (+)	A22 : RLW (−)

Is there less than 450 Ω ?

YES — Repair short to wire between the appropriate wheel sensor (+) and (−) circuits. ■

NO — Go to step 4.

(cont'd)

DTC Troubleshooting (cont'd)

4. Check for continuity between the appropriate wheel sensor (+) circuit terminal and other wheel sensor (+) circuit terminals (see table).

DTC	Appropriate Terminal	Other Terminal		
12	A11 : FRW (+)	A9 : FLW (+)	A23 : RRW (+)	A21 : RLW (+)
14	A9 : FLW (+)	A11 : FRW (+)	A23: RRW (+)	A21 : RLW (+)
16	A23 : RRW (+)	A11 : FRW (+)	A9 : FLW (+)	A21 : RLW (+)
18	A21 : RLW (+)	A11 : FRW (+)	A9 : FLW (+)	A23 : RRW (+)

Is there continuity?

YES—Repair short to wire between the appropriate wheel sensor and the other wheel sensor. ■

NO—Clear the DTC, and test-drive the vehicle. If the ABS indicator comes on and the same DTC is indicated, replace the ABS/TCS control unit. ■

ABS DTC 21, 22, 23, 24: Pulser

1. Clear the DTC.

2. Test-drive the vehicle at 19 mph (30 km/h) or more.

   Does the ABS indicator come on and are DTCs 21–24 indicated?

   YES—Go to step 3.

   NO—The system is OK at this time. ■

3. Check the appropriate pulser gear for a chipped tooth (see table).

DTC	Appropriate Pulser
21	Right-front
22	Left-front
23	Right-rear
24	Left-rear

Is the pulser OK?

YES—Check for loose ABS/TCS control unit connectors. If necessary, substitute a known-good ABS/TCS control unit, and recheck. ■

NO—Replace the driveshaft or the hub unit. (Chipped pulser gear) ■

ABS DTC 31, 32, 33, 34, 35, 36, 37, 38: Solenoid

1. Verify the DTC.

   Is DTC 54 indicated?

   YES—Perform the appropriate troubleshooting for DTC 54.■

   NO—Go to step 2.

2. Turn the ignition switch OFF.

3. Disconnect the modulator unit 24P connector and the ABS/TCS control unit connector C (12P).

4. Check for continuity between the appropriate ABS/TCS control unit connector C (12P) solenoid circuit terminal and body ground (see table).

DTC	Appropriate Terminal
31: FR-IN	C11
32: FR-OUT	C6
33: FL-IN	C9
34: FL-OUT	C4
35: RR-IN	C8
36: RR-OUT	C3
37: RL-IN	C10
38: RL-OUT	C5

ABS/TCS CONTROL UNIT CONNECTOR C (12P)

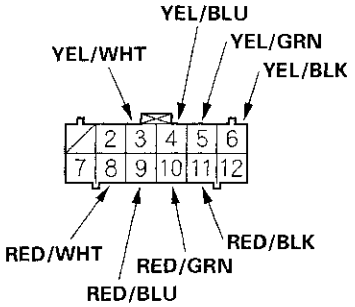

Wire side of female terminals

Is there continuity?

YES—Repair short to body ground in the appropriate solenoid circuit wire between the ABS/TCS control unit and the modulator unit.■

NO—Go to step 5.

5. Connect the modulator unit 24P connector.

6. Check for continuity between the appropriate ABS/TCS control unit connector C (12P) solenoid circuit terminal and body ground (see table).

DTC	Appropriate Terminal
31: FR-IN	C11
32: FR-OUT	C6
33: FL-IN	C9
34: FL-OUT	C4
35: RR-IN	C8
36: RR-OUT	C3
37: RL-IN	C10
38: RL-OUT	C5

ABS/TCS CONTROL UNIT CONNECTOR C (12P)

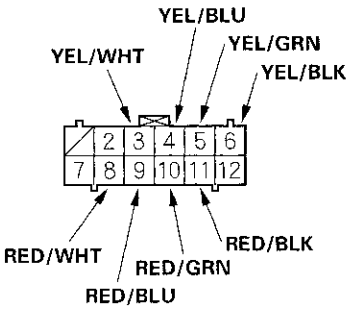

Wire side of female terminals

Is there continuity?

YES—Replace the modulator unit.■

NO—Go to step 7.

7. Disconnect the modulator unit 24P connector.

(cont'd)

DTC Troubleshooting (cont'd)

8. Connect the appropriate modulator unit 24P connector solenoid circuit terminal to body ground with a jumper wire (see table).

DTC	Appropriate Terminal
31: FR-IN	No. 11
32: FR-OUT	No. 19
33: FL-IN	No. 14
34: FL-OUT	No. 22
35: RR-IN	No. 13
36: RR-OUT	No. 21
37: RL-IN	No. 12
38: RL-OUT	No. 20

MODULATOR UNIT 24P CONNECTOR

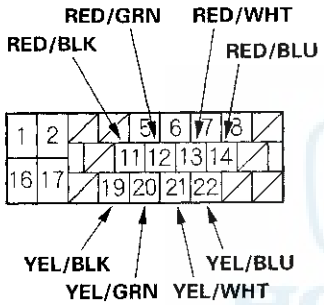

Wire side of female terminals

9. Check for continuity between the appropriate ABS/TCS control unit connector C (12P) solenoid circuit terminal and body ground (see table).

DTC	Appropriate Terminal
31: FR-IN	C11
32: FR-OUT	C6
33: FL-IN	C9
34: FL-OUT	C4
35: RR-IN	C8
36: RR-OUT	C3
37: RL-IN	C10
38: RL-OUT	C5

ABS/TCS CONTROL UNIT CONNECTOR C (12P)

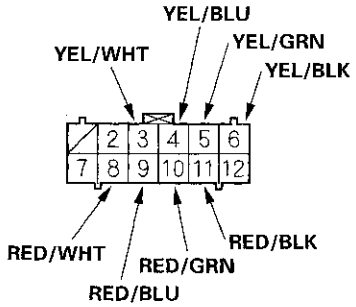

Wire side of female terminals

Is there continuity?

YES — Go to step 10.

NO — Repair open in the appropriate solenoid circuit wire between the ABS/TCS control unit and the modulator unit. ■

10. Remove the jumper wire from the modulator unit 24P connector.

11. Connect the modulator unit 24P connector.

12. Connect the ABS fail-safe relay 4P connector terminal No. 2 to body ground with a jumper wire.

    NOTE: Wire colors of ABS fail-safe relay connector; WHT/GRN, BRN/BLK, BLK, YEL/GRN.

ABS FAIL-SAFE RELAY 4P CONNECTOR

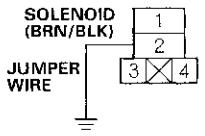

Wire side of female terminals

13. Check the resistance between the appropriate ABS/TCS control unit connector C (12P) terminal and body ground (see table).
    IN: 8 – 10 Ω (at 20°C, 68°F)
    OUT: 3 – 5 Ω (at 20°C, 68°F)

DTC	Appropriate Terminal
31: FR-IN	C11
32: FR-OUT	C6
33: FL-IN	C9
34: FL-OUT	C4
35: RR-IN	C8
36: RR-OUT	C3
37: RL-IN	C10
38: RL-OUT	C5

ABS/TCS CONTROL UNIT CONNECTOR C (12P)

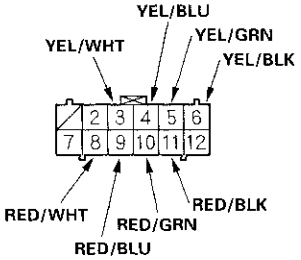

Wire side of female terminals

Is the resistance OK?

YES – Go to step 14.

NO – Replace the modulator unit. ■

14. Disconnect the modulator unit 24P connector, and remove the jumper wire from the ABS fail-safe relay 4P connector.

15. Check for continuity between the appropriate ABS/TCS control unit connector C (12P) terminal and all other ABS and TCS solenoid circuit terminals (see table).

DTC	Appropriate Terminal
31: FR-IN	C11
32: FR-OUT	C6
33: FL-IN	C9
34: FL-OUT	C4
35: RR-IN	C8
36: RR-OUT	C3
37: RL-IN	C10
38: RL-OUT	C5

TCS Solenoid	ABS/TCS Control Unit Connector A (26P) Terminal
NOR	A16
NCR	A15
NOL	A3
NCL	A2

ABS/TCS CONTROL UNIT CONNECTOR C (12P)

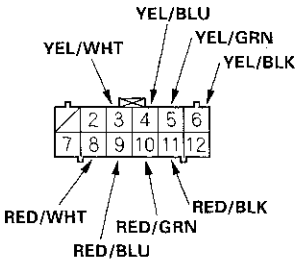

Wire side of female terminals

ABS/TCS CONTROL UNIT CONNECTOR A (26P)

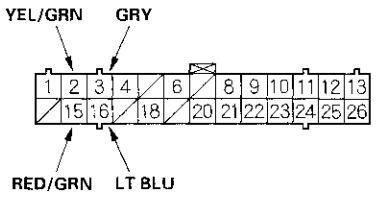

Wire side of female terminals

Is there continuity?

YES – Repair short in the appropriate wires between the ABS/TCS control unit and the modulator unit. ■

NO – Go to step 16.

(cont'd)

DTC Troubleshooting (cont'd)

16. Connect the modulator unit 24P connector.

17. Check for continuity between the appropriate ABS/TCS control unit connector C (12P) terminal and all other ABS and TCS solenoid circuit terminals (see table).

DTC	Appropriate Terminal
31: FR-IN	C11
32: FR-OUT	C6
33: FL-IN	C9
34: FL-OUT	C4
35: RR-IN	C8
36: RR-OUT	C3
37: RL-IN	C10
38: RL-OUT	C5

TCS Solenoid	ABS/TCS Control Unit Connector A (26P) Terminal
NOR	A16
NCR	A15
NOL	A3
NCL	A2

ABS/TCS CONTROL UNIT CONNECTOR C (12P)

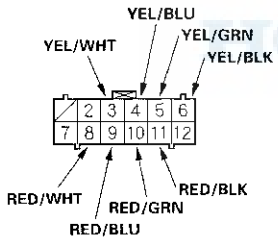

Wire side of female terminals

ABS/TCS CONTROL UNIT CONNECTOR A (26P)

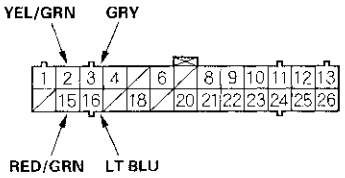

Wire side of female terminals

Is there less than 3 Ω ?

YES – Replace the modulator unit. ■

NO – Check for loose ABS/TCS control unit connectors. If necessary, substitute a known-good ABS/TCS control unit, and recheck. ■

ABS DTC 41, 42, 43, 44: Wheel Lock

1. Check for brake drag.

   Do the brakes drag?

   YES – Repair the brake drag. ■

   NO – Go to step 2.

2. Check the installation of the appropriate wheel sensor (see table).

DTC	Appropriate Wheel Sensor
41	Right-front
42	Left-front
43	Right-rear
44	Left-rear

Is it correct?

YES – The probable cause was the vehicle spun during cornering. If the problem recurs, check the modulator using the Honda PGM Tester. ■

NO – Reinstall the wheel sensor correctly. ■

ABS DTC 51: Motor Lock

1. Clear the DTC.
2. Test-drive the vehicle at 6 mph (10 km/h) or more.

   Does the ABS indicator come on and is DTC 51 indicated?

   YES – Replace the modulator unit. ■

   NO – The system is OK at this time. ■

ABS DTC 52: Motor Stuck OFF

1. Check the ABS MOTOR (30 A) fuse in the under-hood fuse/relay box, and reinstall the fuse if it is OK.

   Is the fuse OK?

   YES – Go to step 3.

   NO – Replace the fuse, and go to step 2.

2. Remove the pump motor relay, and connect the pump motor relay 5P connector terminal No. 4 to No. 5 with a jumper wire for a moment, and check the fuse.

PUMP MOTOR RELAY 5P CONNECTOR

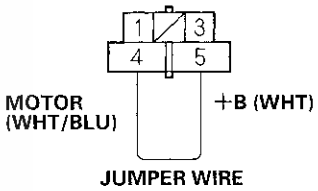

Wire side of female terminals

   Is the fuse blown?

   YES – Check for a short to body ground in the motor power source circuit. ■

   NO – Go to step 3.

3. Check the ABS MTR CK (7.5 A) fuse in the passenger's under-dash fuse/relay box, and reinstall the fuse if it is OK.

   Is the fuse OK?

   YES – Go to step 5.

   NO – Replace the fuse, and go to step 4.

(cont'd)

DTC Troubleshooting (cont'd)

4. Connect the pump motor relay 5P connector terminal No. 4 to No. 5 with a jumper wire for a moment, and check the fuse.

PUMP MOTOR RELAY 5P CONNECTOR

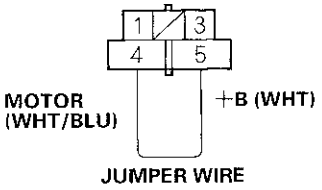

Wire side of female terminals

Is the fuse blown?

YES Check for a short to body ground in the GRN wire between the passenger's under-dash fuse/relay box and the ABS/TCS control unit. ■

NO - Go to step 5.

5. Check the pump motor relay in the under-hood ABS relay box. Refter to the '98 - 01 Accord Service Manual (P/N 61S8008) (see page 22-52).

Is the relay OK?

YES — Go to step 6.

NO — Replace the pump motor relay. ■

6. Connect the pump motor relay 5P connector terminal No. 4 to No. 5 with a jumper wire for a moment.

Does the pump motor operate?

YES — Go to step 11.

NO — Go to step 7.

7. Disconnect the modulator unit 24P connector.

8. Connect the pump motor relay 5P connector terminal No. 4 to No. 5 with a jumper wire.

9. Measure the voltage between the modulator unit 24P connector terminal No. 1 and body ground.

MODULATOR UNIT 24P CONNECTOR

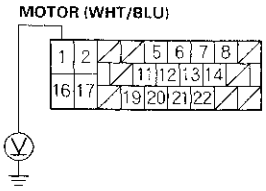

Wire side of female terminals

Is there battery voltage?

YES — Go to step 10.
NO — Repair open in the wire between the under-hood ABS relay box and the pump motor. ■

10. Measure the voltage between the modulator unit 24P connector terminal No. 1 and No. 16.

MODULATOR UNIT 24P CONNECTOR

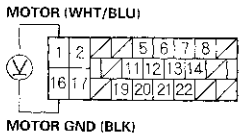

Wire side of female terminals

Is there battery voltage?

YES — Replace the modulator unit. ■
NO — Repair open in the wire between the pump motor and body ground (G203). ■

11. Disconnect the ABS/TCS control unit connector B (16P).

12. Connect the pump motor relay 5P connector terminal No. 1 to No. 5 with a jumper wire.

PUMP MOTOR RELAY 5P CONNECTOR

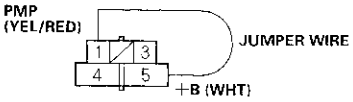

Wire side of female terminals

13. Measure the voltage between the ABS/TCS control unit connector B (16P) terminal B15 and body ground.

ABS/TCS CONTROL UNIT CONNECTOR B (16P)

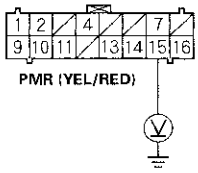

Wire side of female terminals

Is there battery voltage?

YES – Go to step 14.

NO – Repair open in the wire between the under-hood ABS relay box and the ABS/TCS control unit. ■

14. Remove the jumper wire from the pump motor relay 5P connector, and reinstall the pump motor relay.

15. Start the engine.

16. Measure the voltage between the ABS/TCS control unit connector B (16P) terminal B15 and body ground.

ABS/TCS CONTROL UNIT CONNECTOR B (16P)

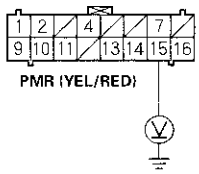

Wire side of female terminals

Is there battery voltage?

YES – Repair short to power in the wire between the under-hood ABS relay box and the ABS/TCS control unit. ■

NO – If the problem recurs, replace the ABS/TCS control unit. ■

ABS DTC 53: Motor Stuck ON

1. Check that the pump motor operates with the ignition switch OFF.

   Does the pump motor operate?

   YES – Replace the pump motor relay. (Pump motor relay stuck ON.) ■

   NO – Go to step 2.

2. Remove the ABS MTR CK (7.5 A) fuse in the passenger's under-dash fuse/relay box.

   Is the fuse OK?

   YES – Leave the fuse removed, and go to step 3.

   NO – Replace the fuse, and recheck. ■

3. Turn the ignition switch ON (II).

4. Measure the voltage between the passenger's under-dash fuse/relay box connector I (16P) terminal I5 and body ground.

PASSENGER'S UNDER-DASH FUSE/RELAY BOX CONNECTOR I (16P)

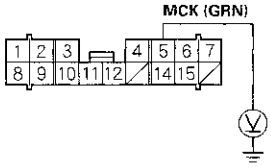

Wire side of female terminals

Is there approx. 10 V?

YES – Go to step 5.

NO – Repair open in the wire between the passenger's under-dash fuse/relay box and the ABS/TCS control unit. ■

5. Reinstall the ABS MTR CK (7.5 A) fuse in the passenger's under-dash fuse/relay box.

(cont'd)

DTC Troubleshooting (cont'd)

6. Disconnect the modulator unit 24P connector.

7. Measure the voltage between terminal No. 1 and body ground.

MODULATOR UNIT 24P CONNECTOR

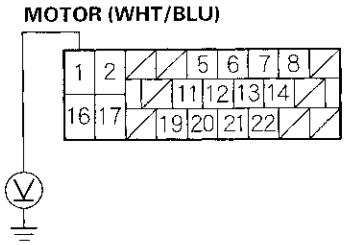

Wire side of female terminals

Is there approx. 10 V?

YES — Go to step 8.

NO — Repair open in the wire between the under-hood ABS relay box and the pump motor. ■

8. Measure the voltage between the modulator unit 24P connector terminal No. 1 and No. 16.

MODULATOR UNIT 24P CONNECTOR

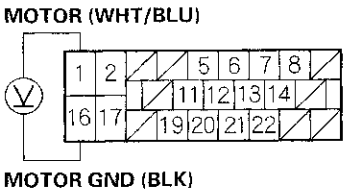

Wire side of female terminals

Is there approx. 10 V?

YES — Go to step 9.

NO — Repair open in the wire between the pump motor and body ground (G203). ■

9. Remove the pump motor relay, then connect relay terminals No. 4 and No. 5 together with a jumper wire.

Does the pump motor run?

YES — Go to step 10.

NO — Replace the pump motor. ■

10. Disconnect the ABS/TCS control unit connector B (16P).

11. Check for continuity between terminal B15 and body ground.

ABS/TCS CONTROL UNIT CONNECTOR B (16P)

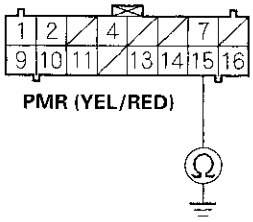

Wire side of female terminals

Is there continuity?

YES — Repair short to body ground in the wire between the under-hood ABS relay box and the ABS/TCS control unit. ■

NO — If the problem recurs, replace the ABS/TCS control unit. ■

ABS DTC 54: ABS Fail-safe Relay

1. Check the ABS F/S (20 A) fuse in the under-hood fuse/relay box, and reinstall the fuse if it is OK.

   Is the fuse OK?

   YES – Go to step 2.

   NO – Replace the fuse, and recheck. ■

2. Turn the ignition switch ON (II).

   Does the fuse blow?

   YES – Repair short to body ground in the wire between the ABS fail-safe relay, the TCS relay, the pump motor relay, and modulator unit. ■

   NO – Go to step 3.

3. Check the ABS fail-safe relay in the under-hood ABS relay box. Refer to the '98 – 01 Accord Service Manual (P/N 61S8008) (see page 22-52). The wire colors of the ABS fail-safe relay connector are WHT/GRN, BRN/BLK, BLK, and YEL/GRN.

   Is the relay OK?

   YES – Leave the ABS fail-safe relay removed, and go to step 4.

   NO – Replace the ABS fail-safe relay. ■

4. Measure the voltage between the ABS fail-safe relay 4P connector terminal No. 1 and body ground.

ABS FAIL-SAFE RELAY 4P CONNECTOR

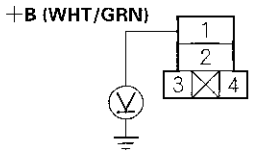

Wire side of female terminals

Is there battery voltage?

YES Go to step 5.

NO – Repair open in the wire between the under-hood fuse/relay box and the ABS fail-safe relay. ■

5. Connect the ABS fail-safe relay 4P connector terminal No. 1 to No. 2 with a jumper wire.

ABS FAIL-SAFE RELAY 4P CONNECTOR

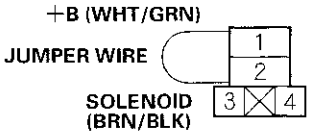

Wire side of female terminals

6. Disconnect the modulator unit 24P connector.

7. Measure the voltage between terminal No.2 and body ground.

MODULATOR UNIT 24P CONNECTOR

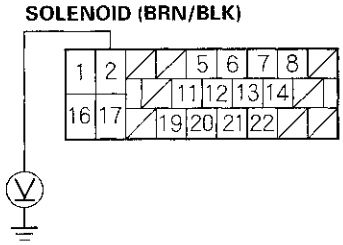

Wire side of female terminals

Is there battery voltage?

YES Go to step 8.

NO – Repair open in the wire between the ABS fail-safe relay and the modulator unit. ■

8. Remove the jumper wire from the ABS fail-safe relay connector.

(cont'd)

DTC Troubleshooting (cont'd)

9. Measure the voltage between the modulator unit 24P connector terminal No. 2 and body ground.

MODULATOR UNIT 24P CONNECTOR

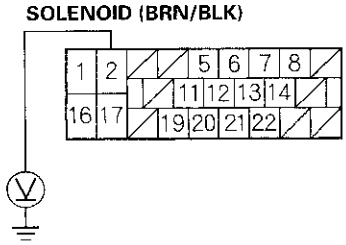

Wire side of female terminals

Is there battery voltage?

YES—Repair short to power in the wire between the ABS fail-safe relay, the TCS relay, the modulator unit, and the under-hood ABS relay box. ■

NO—Go to step 10.

10. Disconnect the ABS/TCS control unit connector A (26P).

11. Turn the ignition switch ON (II).

12. Measure the voltage between terminal A25 and body ground.

ABS/TCS CONTROL UNIT CONNECTOR A (26P)

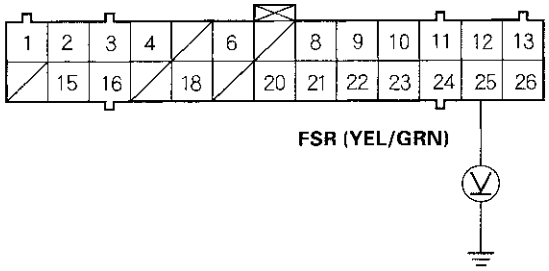

Wire side of female terminals

Is there battery voltage?

YES—Repair short to power in the wire between the ABS/TCS control unit and the ABS fail-safe relay. ■

NO—Go to step 13.

13. Check for continuity between the ABS/TCS control unit connector A (26P) terminal A25 and body ground.

ABS/TCS CONTROL UNIT CONNECTOR A (26P)

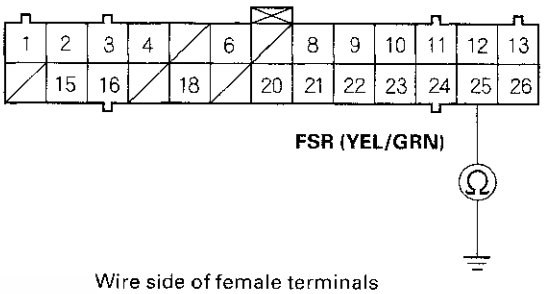

Wire side of female terminals

Is there continuity?

YES—Repair short to body ground in the wire between the ABS/TCS control unit and the ABS fail-safe relay. ■

NO—Go to step 14.

14. Check for continuity between the ABS fail-safe relay 4P connector terminal No. 3 and body ground.

ABS FAIL-SAFE RELAY 4P CONNECTOR

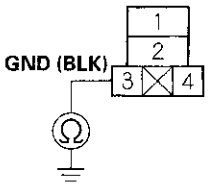

Wire side of female terminals

Is there continuity?

YES—Go to step 15.

NO—Repair open in the wire between the ABS fail-safe relay and body ground, or a loose or poor connection at body ground (G202). ■

15. Connect the ABS fail-safe relay 4P connector terminals No. 3 and No. 4 with a jumper wire.

ABS FAIL-SAFE RELAY 4P CONNECTOR

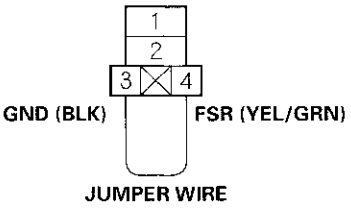

Wire side of female terminals

16. Check for continuity between the ABS/TCS control unit connector A (26P) terminal A25 and body ground.

ABS/TCS CONTROL UNIT CONNECTOR A (26P)

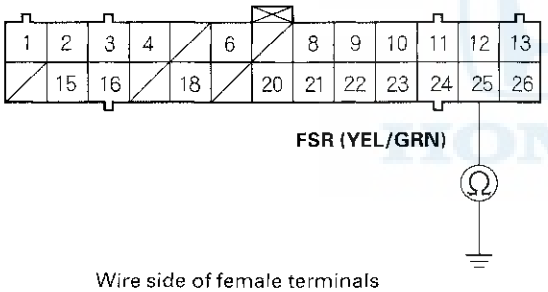

Wire side of female terminals

Is there continuity?

YES — If the problem recurs, replace the ABS/TCS control unit. ■

NO — Repair open in the wire between the ABS/TCS control unit and the ABS fail-safe relay. ■

ABS DTC 61, 62: Ignition Voltage

1. Clear the DTC.
2. Test-drive the vehicle at 6 mph (10 km/h) or more.

   Does the ABS indicator come on?

   YES — Go to step 3.

   NO — The system is OK at this time. ■

3. Verify the DTC.

   Is DTC 61 or 62 indicated?

   YES — Check the charging system. ■

   NO — Perform the appropriate troubleshooting for the code. ■

DTC Troubleshooting (cont'd)

ABS DTC 71: Different Diameter Tire

1. Clear the DTC.
2. Test-drive the vehicle.

   Does the ABS indicator come on and is DTC 71 indicated?

   YES—Make sure all four tires are the specified size and are inflated to proper specification.■

   NO—Intermittent failure; the vehicle is OK at this time.■

ABS DTC 81: Central Processing Unit (CPU) Diagnosis, and ROM/RAM Diagnosis

1. Clear the DTC.
2. Test-drive the vehicle.

   Does the ABS indicator come on and is DTC 81 indicated?

   YES—Replace the ABS/TCS control unit.■

   NO—Intermittent failure; the vehicle is OK at this time.■

TCS DTC 24, 25, 26, 27: TCS Solenoid

1. Verify the TCS DTC.

   Is TCS DTC 28 indicated?

   YES – Perform the appropriate troubleshooting for DTC 28. ■

   NO – Go to step 2.

2. Turn the ignition switch OFF.

3. Disconnect the modulator unit 24P connector and the ABS/TCS control unit connector A (26P).

4. Check for continuity between the appropriate ABS/TCS control unit connector A (26P) TCS solenoid circuit terminal and body ground (see table).

TCS DTC	Appropriate Terminal
24: NOR	A16
25: NCR	A15
26: NOL	A3
27: NCL	A2

ABS/TCS CONTROL UNIT CONNECTOR A (26P)

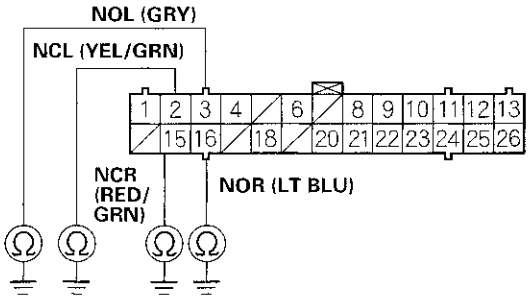

Wire side of female terminals

Is there continuity?

YES – Repair short to body ground in the appropriate solenoid circuit wire between the ABS/TCS control unit and the modulator unit. ■

NO – Go to step 5.

5. Connect the modulator unit 24P connector.

6. Check for continuity between the appropriate ABS/TCS control unit connector A (26P) solenoid circuit terminal and body ground (see table).

TCS DTC	Appropriate Terminal
24: NOR	A16
25: NCR	A15
26: NOL	A3
27: NCL	A2

ABS/TCS CONTROL UNIT CONNECTOR A (26P)

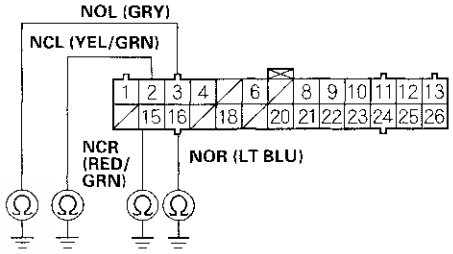

Wire side of female terminals

Is there continuity?

YES – Replace the modulator unit. ■

NO – Go to step 7.

7. Disconnect the modulator unit 24P connector.

8. Connect the appropriate modulator unit 24P connector TCS solenoid circuit terminals to body ground with jumper wires (see table).

TCS DTC	Appropriate Terminal
24: NOR	No. 5
25: NCR	No. 6
26: NOL	No. 8
27: NCL	No. 7

MODULATOR UNIT 24P CONNECTOR

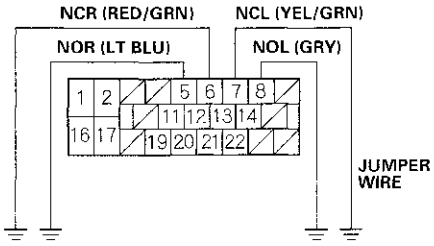

Wire side of female terminals

(cont'd)

DTC Troubleshooting (cont'd)

9. Check for continuity between the appropriate ABS/TCS control unit connector A (26P) solenoid circuit terminal and body ground (see table).

TCS DTC	Appropriate Terminal
24: NOR	A16
25: NCR	A15
26: NOL	A3
27: NCL	A2

ABS/TCS CONTROL UNIT CONNECTOR A (26P)

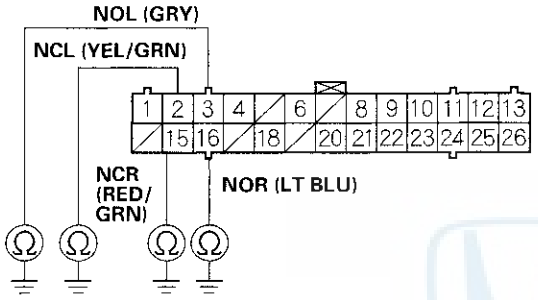

Wire side of female terminals

Is there continuity?

YES—Go to step 10.

NO—Repair open in the appropriate TCS solenoid circuit wire between the ABS/TCS control unit and the modulator unit. ■

10. Remove the jumper wires from the modulator unit 24P connector.

11. Connect the modulator unit 24P connector.

12. Remove the TCS relay, and connect the TCS relay 4P connector terminal No. 2 to body ground with a jumper wire.

NOTE: Wire colors of TCS relay 4P connector; BLU, RED/BLU, BRN/BLK, GRN/YEL.

TCS RELAY 4P CONNECTOR

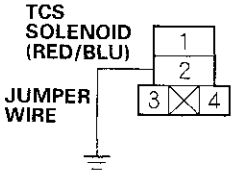

Wire side of female terminals

13. Check the resistance between the appropriate ABS/TCS control unit connector A (26P) terminal and body ground (see table).
NOR, NOL, NCR, NCL: 8 – 10 Ω (at 20°C, 68°F)

TCS DTC	Appropriate Terminal
24: NOR	A16
25: NCR	A15
26: NOL	A3
27: NCL	A2

ABS/TCS CONTROL UNIT CONNECTOR A (26P)

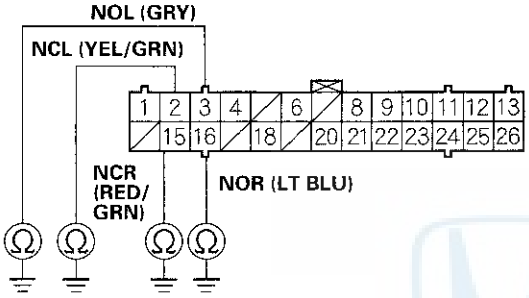

Wire side of female terminals

Is there resistance OK?

YES – Go to step 14.

NO – Replace the modulator unit. ■

14. Disconnect the modulator unit connector, and remove the jumper wire from the TCS relay 4P connector terminal.

15. Check for continuity between the appropriate ABS/TCS control unit connector A (26P) terminal and each of the other terminals listed (see table).

TCS DTC	Appropriate Terminal
24: NOR	A16
25: NCR	A15
26: NOL	A3
27: NCL	A2

ABS Solenoid	ABS/TCS Control Unit Connector C (12P) Terminal
FR-IN	C11
FR-OUT	C6
FL-IN	C9
FL-OUT	C4
RR-IN	C8
RR-OUT	C3
RL-IN	C10
RL-OUT	C5

ABS/TCS CONTROL UNIT CONNECTOR A (26P)

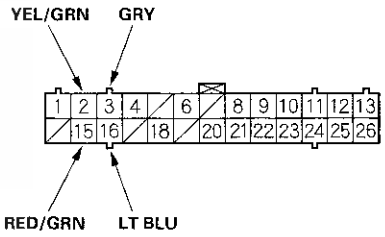

Wire side of female terminals

ABS/TCS CONTROL UNIT CONNECTOR C (12P)

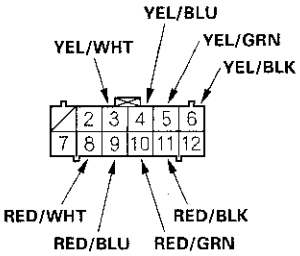

Wire side of female terminals

Is there continuity?

YES – Repair short in the appropriate wires between the ABS/TCS control unit and the modulator unit. ■

NO – Go to step 16.

(cont'd)

DTC Troubleshooting (cont'd)

16. Connect the modulator unit 24P connector.

17. Check for continuity between the appropriate ABS/TCS control unit connector A (26P) terminal and all other ABS and TCS solenoid circuit terminals (see table).

TCS DTC	Appropriate Terminal
24: NOR	A16
25: NCR	A15
26: NOL	A3
27: NCL	A2

ABS Solenoid	ABS/TCS Control Unit Connector C (12P) Terminal
FR-IN	C11
FR-OUT	C6
FL-IN	C9
FL-OUT	C4
RR-IN	C8
RR-OUT	C3
RL-IN	C10
RL-OUT	C5

ABS/TCS CONTROL UNIT CONNECTOR A (26P)

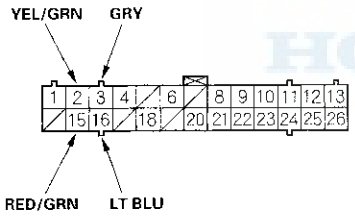

Wire side of female terminals

ABS/TCS CONTROL UNIT CONNECTOR C (12P)

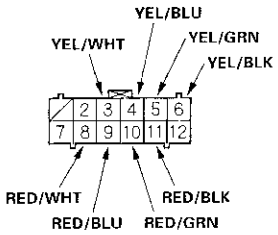

Wire side of female terminals

Is there less than 3Ω ?

YES—Replace the modulator unit.■

NO—Check for loose ABS/TCS control unit connectors. If necessary, substitute a known-good ABS/TCS control unit, and recheck.■

TCS DTC 28: TCS Relay

1. Check the BSC F/S (20 A) fuse in the under-hood fuse/relay box, and reinstall the fuse if it is OK.

   Is the fuse OK?

   YES—Go to step 2.

   NO—Replace the fuse, and recheck.■

2. Turn the ignition switch ON (II).

   Does the fuse blow?

   YES—Repair short to body ground in the wire between the TCS relay and the modulator unit.■

   NO—Go to step 3.

3. Check the TCS relay in the under-hood ABS relay box (see page 22-31). The wire colors of the TCS relay 4P connector are BLU, RED/BLU, BRN/BLK, and GRN/YEL.

   Is the relay OK?

   YES—Leave the TCS relay removed, and go to step 4.

   NO—Replace the TCS relay.■

4. Measure the voltage between the TCS relay 4P connector terminal No. 1 and body ground.

TCS RELAY 4P CONNECTOR

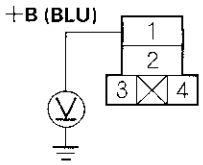

Wire side of female terminals

Is there battery voltage?

YES—Go to step 5.

NO—Repair open in the wire between the under-hood fuse/relay box and the TCS relay.■

5. Connect the TCS relay 4P connector terminal No. 1 to No. 2 with a jumper wire.

TCS RELAY 4P CONNECTOR

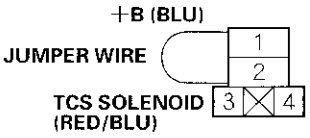

Wire side of female terminals

6. Disconnect the modulator unit 24P connector.

7. Measure the voltage between terminal No.17 and body ground.

MODULATOR UNIT 24P CONNECTOR

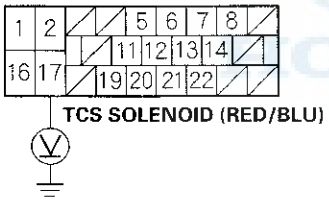

Wire side of female terminals

Is there battery voltage?

YES — Go to step 8.

NO — Repair open in the wire between the TCS relay and the modulator unit. ■

8. Remove the jumper wire from the TCS relay 4P connector.

9. Measure the voltage between the modulator unit 24P connector terminal No. 17 and body ground.

MODULATOR UNIT 24P CONNECTOR

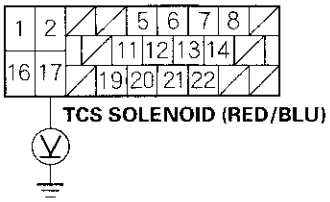

Wire side of female terminals

Is there battery voltage?

YES — Repair short to power in the wire between the TCS relay and the modulator unit. ■

NO Go to step 10.

10. Disconnect the ABS/TCS control unit connector B (16P).

11. Measure the voltage between terminal B13 and body ground.

ABS/TCS CONTROL UNIT CONNECTOR B (16P)

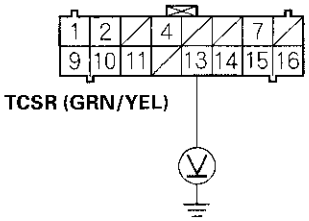

Wire side of female terminals

Is there battery voltage?

YES — Repair short to power in the wire between the ABS/TCS control unit and the TCS relay. ■

NO — Go to step 12.

(cont'd)

DTC Troubleshooting (cont'd)

12. Check for continuity between the ABS/TCS control unit connector B (16P) terminal B13 and body ground.

ABS/TCS CONTROL UNIT CONNECTOR B (16P)

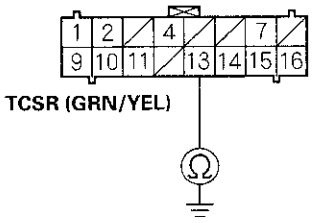

Wire side of female terminals

Is there continuity?

YES — Repair short to body ground in the wire between the ABS/TCS control unit and the TCS relay. ■

NO — Go to step 13.

13. Turn the ignition switch OFF.

14. Remove the ABS fail-safe relay. The wire colors of ABS fail-safe relay 4P connector are WHT/GRN, BRN/BLK, BLK, YEL/GRN.

15. Connect the ABS fail-safe relay 4P connector terminal No. 1 and No. 2 with a jumper wire.

ABS FAIL-SAFE RELAY 4P CONNECTOR

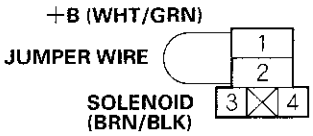

Wire side of female terminals

16. Measure the voltage between the TCS relay 4P connector terminal No. 3 and body ground.

TCS RELAY 4P CONNECTOR

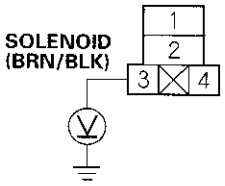

Wire side of female terminals

Is there battery voltage?

YES — Go to step 17.

NO — Repair open in the wire between the fail-safe relay and the TCS relay. ■

17. Connect the TCS relay 4P connector No. 3 and No. 4 with a jumper wire.

NOTE: Make sure the ABS/TCS control unit connector B (16P) is disconnected.

TCS RELAY 4P CONNECTOR

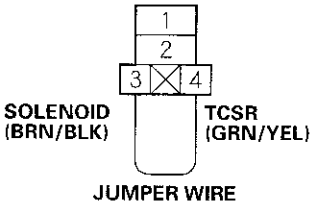

Wire side of female terminals

18. Measure the voltage between the ABS/TCS control unit connector B (16P) terminal B13 and body ground.

ABS/TCS CONTROL UNIT CONNECTOR B (16P)

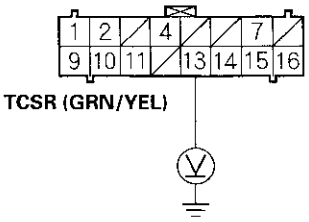

Wire side of female terminals

Is there battery voltage?

YES – If the problem recurs, replace the ABS/TCS control unit. ■

NO – Repair open in the wire between the TCS relay and the ABS/TCS control unit. ■

TCS DTC 31: Engine Retard Command (PFINH) signal

NOTE: If the MIL or ABS indicator is ON, troubleshoot the PGM-FI or ABS first.

1. Disconnect the PCM connector A (32P) and the ABS/TCS control unit connector B (16P).

2. Check for continuity between the PCM connector A (32P) terminal A13 and body ground.

PCM CONNECTOR A (32P)

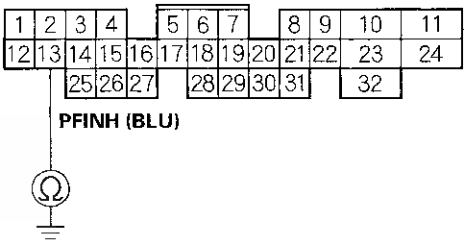

Wire side of female terminals

Is there continuity?

YES – Repair short to body ground in the wire between the PCM and the ABS/TCS control unit. ■

NO – Go to step 3.

3. Connect the PCM connector A (32P).

4. Start the engine.

(cont'd)

DTC Troubleshooting (cont'd)

5. Measure the voltage between the PCM connector A (32P) terminal A13 and body ground.

   NOTE: Use the 10 V range or similar range in an analog tester.

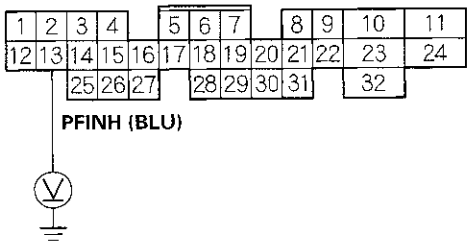

Wire side of female terminals

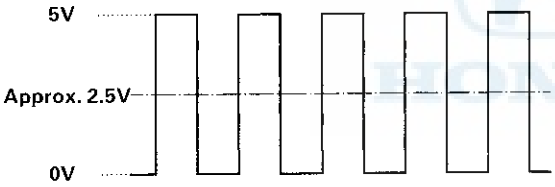

Is there approx. 2.5 V?

YES — Go to step 6.

NO — Check for loose PCM connectors. If necessary, substitute a known-good PCM, and recheck. ■

6. With an analog voltmeter set to the 10 V or similar range, measure the voltage between the ABS/TCS control unit connector B (16P) terminal B10 and body ground.

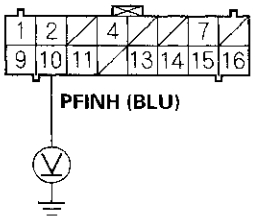

Wire side of female terminals

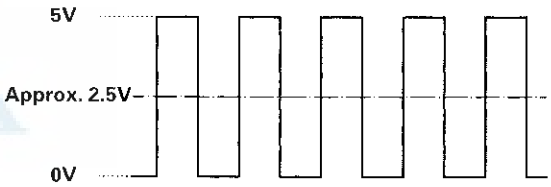

Is there approx. 2.5 V?

YES — Check for loose ABS/TCS control unit connectors. If necessary, substitute a known-good ABS/TCS control unit, and recheck. ■

NO — Repair open in the wire between the PCM and the ABS/TCS control unit. ■

TCS DTC 32: Engine speed (NEP) Signal

NOTE: If the MIL or ABS indicator is ON, troubleshoot the PGM-FI or ABS first.

1. Disconnect the PCM connector A (32P) and ABS/TCS control unit connector B (16P).

2. Check for continuity between the PCM connector A (32P) terminal A19 and body ground.

PCM CONNECTOR A (32P)

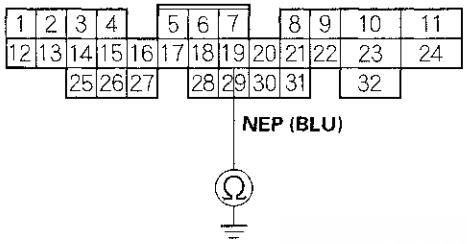

Wire side of female terminals

Is there continuity?

YES—Repair short to body ground in the wire between the PCM and the ABS/TCS control unit.

NO—Go to step 3.

3. Connect the PCM connector A (32P).

4. Start the engine, warm it up to normal operating temperature, and let it idle.

5. With an analog voltmeter set to the 10 V or similar range, measure the voltage between the PCM connector A (32P) terminal A19 and body ground.

PCM CONNECTOR A (32P)

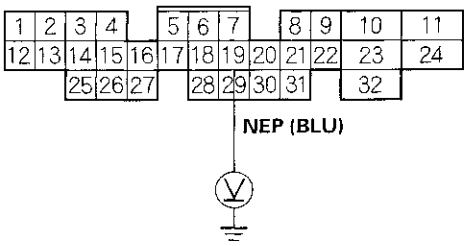

Wire side of female terminals

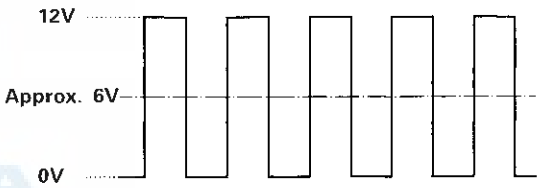

Is there approx. 6 V?

YES—Go to step 6.

NO—Check for loose PCM connectors. If necessary, substitute a known-good PCM, and recheck. ■

(cont'd)

DTC Troubleshooting (cont'd)

6. With the engine still idling, measure the voltage between the ABS/TCS control unit connector B (16P) terminal B11 and body ground with the analog voltmeter again.

ABS/TCS CONTROL UNIT CONNECTOR B (16P)

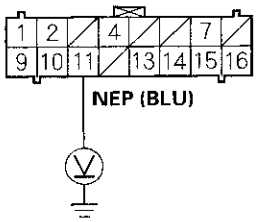

Wire side of female terminals

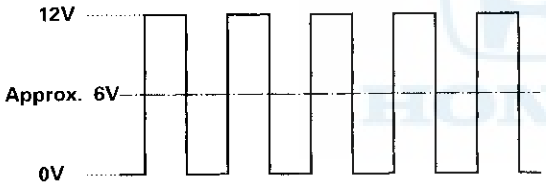

Is there approx. 6 V?

YES—The system is OK at this time. If the problem recurs, replace the ABS/TCS control unit.■

NO—Repair open in the wire between the PCM and the ABS/TCS control unit.■

TCS DTC 34: Reference Voltage (VREF) Signal

NOTE: If the MIL or the ABS indicator is ON, troubleshoot the PGM-FI or the ABS the first.

1. Disconnect the PCM connector A (32P) and the ABS/TCS control unit connector B (16P).

2. Check for continuity between the PCM connector A (32P) terminal A7 and body ground.

PCM CONNECTOR A (32P)

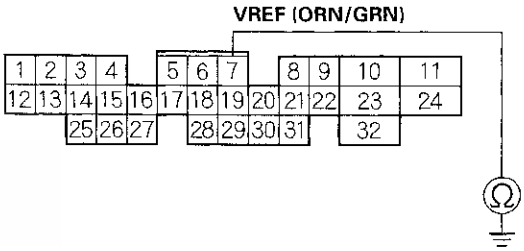

Wire side of female terminals

Is there continuity?

YES—Repair short to body ground in the wire between the PCM and the ABS/TCS control unit.■

NO—Go to step 3.

3. Connect the PCM connector A (32P).

4. Turn the ignition switch ON (II).

5. Measure the voltage between the PCM connector A (32P) terminal A7 and body ground.

PCM CONNECTOR A (32P)

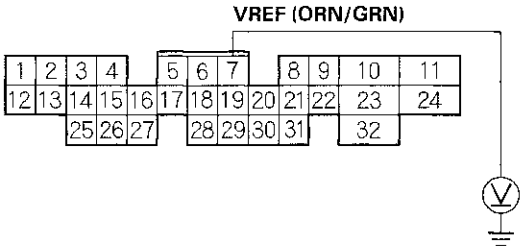

Wire side of female terminals

Is there approx. 5 V?

YES Go to step 6.

NO – Check for loose PCM connectors. If necessary, substitute a known-good PCM, and recheck. ■

6. Measure the voltage between the ABS/TCS control unit connector B(16P) terminal B2 and body ground.

ABS/TCS CONTROL UNIT CONNECTOR B (16P)

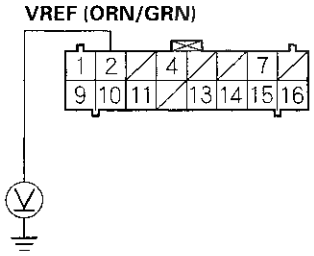

Wire side of female terminals

Is there approx. 5 V?

YES – The system is OK at this time. If the problem recurs, replace the ABS/TCS control unit. ■

NO – Repair open in the wire between the PCM and the ABS/TCS control unit. ■

TCS DTC 36: Throttle Position Sensor Output (THLOUT) Signal

NOTE: If the MIL or the ABS indicator is ON, troubleshoot the PGM-FI or the ABS first.

1. Disconnect the PCM connector A (32P) and the ABS/TCS control unit connector B(16P).

2. Check for continuity between the PCM connector A (32P) terminal A31 and body gound.

PCM CONNECTOR A (32P)

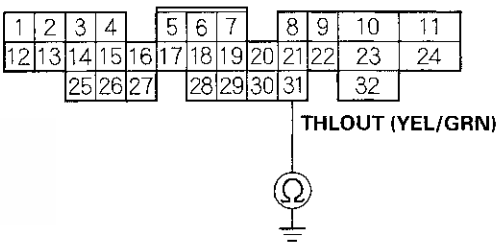

Wire side of female terminals

Is there continuity?

YES – Repair short to body ground in the wire between the PCM and the ABS/TCS control unit. ■

NO – Go to step 3.

3. Connect the PCM connector A (32P).

4. Start the engine.

(cont'd)

DTC Troubleshooting (cont'd)

5. Measure the voltage between the PCM connector A (32P) terminal A31 and body ground with the throttle fully opened and fully closed. There should be a smooth transition from approx. 0.5 V and 4.5 V.

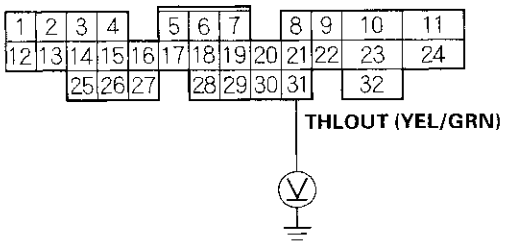

Wire side of female terminals

Is the voltage as specified?

YES — Go to step 6.

NO — Check for loose PCM connectors. If necessary, substitute a known-good PCM, and recheck. ■

6. Measure the voltage between the ABS/TCS control unit connector B (16P) terminal B9 and body ground with the throttle fully closed.

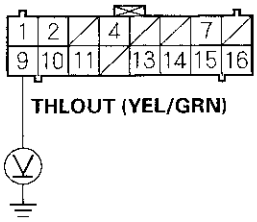

Wire side of female terminals

Is there approx. 0.5 V?

YES — The system is OK at this time. If the problem recurs, replace the ABS/TCS control unit. ■

NO — Repair open in the wire between the PCM and the ABS/TCS control unit. ■

TCS DTC 61: A/T Shift Position (ATSFTP) Signal

NOTE: If the MIL or the ABS indicator is ON, troubleshoot the PGM-FI or the ABS first.

1. Disconnect the PCM connector A (32P) and the ABS/TCS control unit connector B (16P).

2. Check for continuity between the PCM connector A (32P) terminal A11 and body ground.

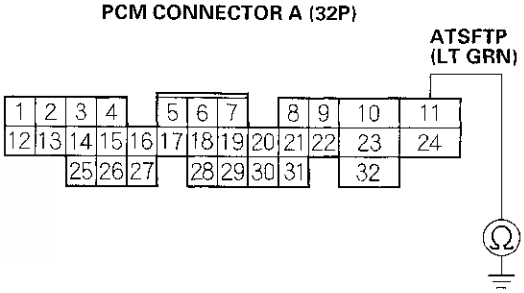

Wire side of female terminals

Is there continuity?

YES — Repair short to body ground in the wire between the PCM and the ABS/TCS control unit. ■

NO — Go to step 3.

3. Connect the PCM connector A (32P).

4. Shift the transmission to P position.

5. Start the engine.

6. With an analog voltmeter set to the 10 V or similar range, measure the voltage between the PCM connector A (32P) terminal A11 and body ground.

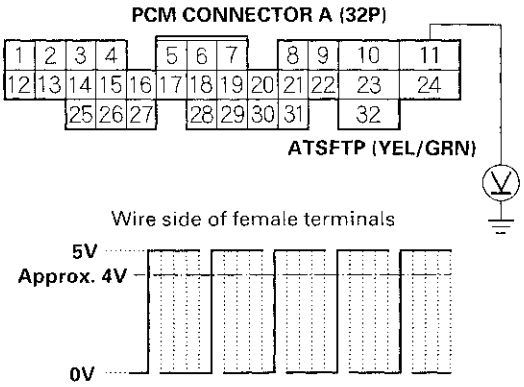

Is there approx. 4 V?

YES – Go to step 7.

NO – Check for loose PCM connectors. If necessary, substitute a known-good PCM, and recheck. ■

7. With an analog voltmeter set to the 10 V or similar range, measure the voltage between the ABS/TCS control unit connector B (16P) terminal B7 and body ground.

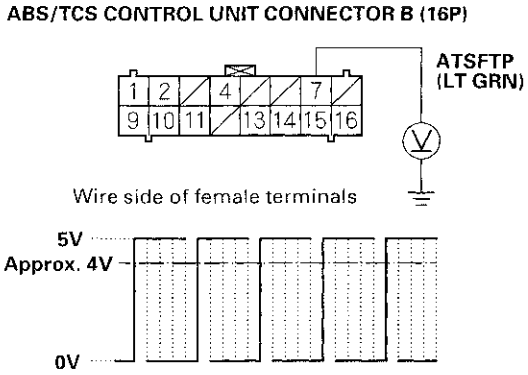

Is there approx. 4 V?

YES – Check for loose ABS/TCS control unit connectors. If necessary, substitute a known-good ABS/TCS control unit, and recheck. ■

NO – Repair open in the wire between the PCM and the ABS/TCS control unit. ■

TCS DTC 81: Continuous TCS Operation

NOTE: If the MIL or the ABS indicator is ON, troubleshoot the PGM-FI or the ABS first.

1. Clear the DTC.

2. Test-drive the vehicle.

Does the TCS indicator come on, and is DTC 81 indicated?

YES – Replace the ABS/TCS control unit. ■

NO – Intermittent failure; the vehicle is OK at this time. ■

ABS Indicator Circuit Troubleshooting

1. Turn the ignition switch ON (II), and watch the ABS indicator.

   Does the ABS indicator come on?

   YES—If the ABS indicator comes on and goes off, it's OK. If the ABS indicator stays on, turn the ignition switch OFF, and go to step 13.

   NO—Go to step 2.

2. Turn the ignition switch OFF then ON (II) again.

   Does the brake system indicator come on?

   YES—Go to step 3.

   NO—Repair open in the indicator power source circuit. ■
   - Blown BACK UP LIGHT (7.5 A) fuse.
   - Open in the wire between the BACK UP LIGHT (7.5 A) fuse and the gauge assembly.
   - Open circuit inside the fuse box.

3. Turn the ignition switch OFF.

4. Disconnect the ABS/TCS control unit connector A (26P).

5. Turn the ignition switch ON (II).

   Does the ABS indicator come on?

   YES—Check for loose ABS/TCS control unit connectors. If necessary, substitute a known-good ABS/TCS control unit, and recheck. ■

   NO—Go to step 6.

6. Check the ABS indicator bulb in the gauge assembly.

   Is the bulb OK?

   YES—Go to step 7.

   NO—Replace the ABS indicator bulb. ■

7. Turn the ignition switch OFF.

8. Disconnect the gauge assembly connector C (16P).

9. Check for continuity between the gauge assembly connector C (16P) terminal C10 and body ground.

   GAUGE ASSEMBLY CONNECTOR C (16P)

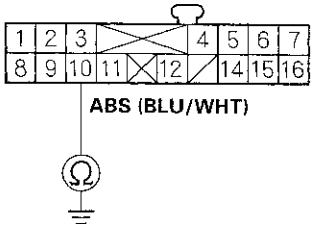

   Wire side of female terminals

   Is there continuity?

   YES—Repair short to body ground in the wire between the gauge assembly and the ABS/TCS control unit. ■

   NO—Go to step 10.

10. Connect the gauge assembly connector C (16P).

11. Connect the gauge assembly connector B (22P) terminal B16 to body ground with a jumper wire.

    GAUGE ASSEMBLY CONNECTOR B (22P)

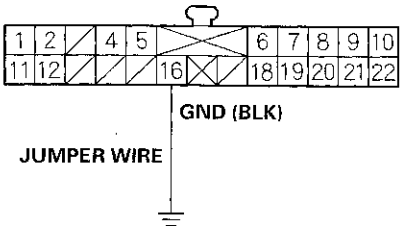

    Wire side of female terminals

12. Turn the ignition switch ON (II).

    Does the ABS indicator come on?

    YES—Repair open in the wire between the gauge assembly and body ground (G501). ■

    NO—Replace the gauge assembly. ■

13. Check the R/C MIRROR (7.5 A) fuse in the driver's under-dash fuse/relay box, and reinstall the fuse if it is OK.

    Is the fuse OK?

    YES—Go to step 14.

    NO—Replace the fuse, and recheck.■

14. Connect the ABS/TCS control unit connector A (26P) terminal A1 to body ground with a jumper wire.

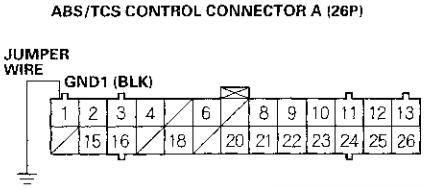

Wire side of female terminals

15. Turn the ignition switch ON (II).

    Does the ABS indicator go off?

    YES—Repair open in the wire between the ABS/TCS control unit and body ground (G403).■

    NO—Go to step 16.

16. Measure the voltage between the ABS/TCS control unit connector A (26P) terminal A13 and body ground.

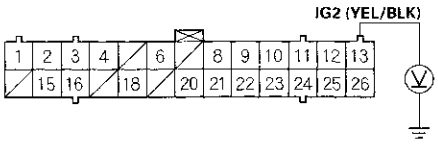

Wire side of female terminals

Is there battery voltage?

YES—Go to step 17.

NO—Repair open in the wire between the R/C MIRROR (7.5 A) fuse and the ABS/TCS control unit.■

17. Connect the ABS/TCS control unit connector A (26P) terminal A4 to body ground with a jumper wire.

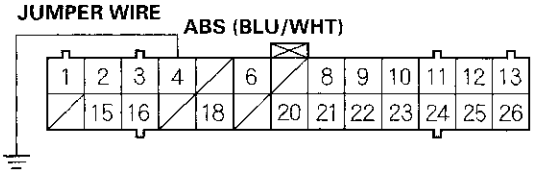

Wire side of female terminals

Does the ABS indicator go off?

YES—Check for loose ABS/TCS control unit connectors. If necessary, substitute a known-good ABS/TCS control unit, and recheck.■

NO—Go to step 18.

18. Connect the gauge assembly connector C (16P) terminal C10 to body ground with a jumper wire.

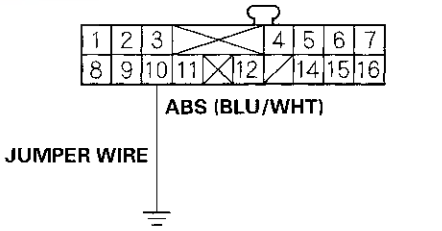

Wire side of female terminals

Does the ABS indicator go off?

YES—Repair open in the wire between the gauge assembly and the ABS/TCS control unit.■

NO—Replace the gauge assembly.■

TCS Indicator Circuit Troubleshooting

1. Start the engine, and watch the TCS indicator.

   Does the TCS indicator come on?

   YES — If the TCS indicator comes on and goes off, It's OK. If the TCS indicator stays on, go to step 7.

   NO — Go to step 2.

2. Turn the engine OFF, then restart it again.

   Does the brake system indicator come on?

   YES — Go to step 3.

   NO — Repair open in the indicator power source circuit. ■
   - Blown BACK UP LIGHT (7.5 A) fuse.
   - Open in the wire between the BACK UP LIGHT (7.5 A) fuse and the gauge assembly.
   - Open circuit inside the fuse box.

3. Turn the engine OFF, and check the TCS indicator bulb in the gauge assembly.

   Is the bulb OK?

   YES — Go to step 4.

   NO — Replace the TCS indicator bulb. ■

4. Connect the gauge assembly connector B (22P) terminal B18 and body ground with a jumper wire. Turn the ignition switch ON (II).

   GAUGE ASSEMBLY CONNECTOR B (22P)

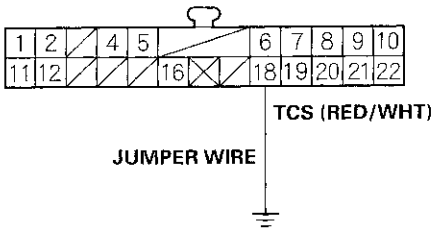

Wire side of female terminals

   Does the TCS indicator come on?

   YES — Go to step 5.

   NO — Replace the gauge assembly. ■

5. Remove the jumper wire at the gauge assembly, and connect the ABS/TCS control unit connector B (16P) terminal B16 and body ground with a jumper wire.

   ABS/TCS CONTROL UNIT CONNECTOR B (16P)

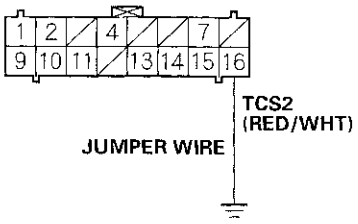

Wire side of female terminals

   Does the TCS indicator come on?

   YES — Go to step 6.

   NO — Repair open in the wire between the gauge assembly and the ABS/TCS control unit. ■

6. Connect the ABS/TCS control unit connector C (12P) terminal C2 and body ground with a jumper wire.

   ABS/TCS CONTROL UNIT CONNECTOR C (12P)

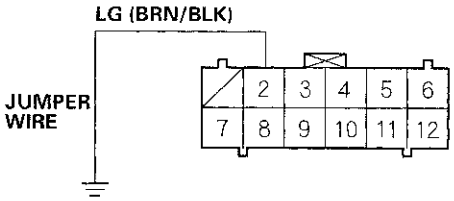

Wire side of female terminals

   Does the TCS indicator come on?

   YES — Repair open in the wire between the ABS/TCS control unit and body ground (G101). ■

   NO — Check for loose ABS/TCS control unit connectors. If necessary, substitute a known-good ABS/TCS control unit, and recheck. ■

7. Check the R/C MIRROR (7.5 A) fuse in the driver's under-dash fuse/relay box, and reinstall the fuse if it is OK.

   Is the fuse OK?

   YES—Go to step 8.

   NO—Replace the fuse, and recheck. ■

8. Measure the voltage between the ABS/TCS control unit connector A (26P) terminal A13 and body ground.

   ABS/TCS CONTROL CONNECTOR A (26P)

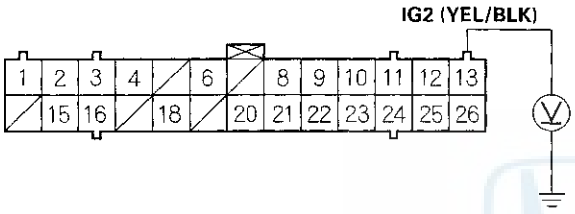

   Wire side of female terminals

   Is there battery voltage?

   YES—Go to step 9.

   NO—Repair open in the wire between the driver's under-dash fuse/relay box and ABS/TCS control unit. ■

9. Turn the ignition switch OFF.

10. Disconnect the ABS/TCS control unit connector A (26P) and connector B (16P).

11. Turn the ignition switch ON(II).

    Does the TCS indicator go off?

    YES—Check for loose ABS/TCS control unit connectors. If necessary, substitute a known-good ABS/TCS control unit, and recheck. ■

    NO—Repair short to body ground in the wire between the gauge assembly and the ABS/TCS control unit. ■

Modulator Unit Removal and Installation

NOTE:
- Do not spill brake fluid on the vehicle; it may damage the paint; if brake fluid gets on the paint, wash it off immediately with water.
- Take care not to damage or deform the brake lines during removal and installation.
- To prevent the brake fluid from flowing, plug and cover the hose ends and joints with a shop towel or equivalent material.

Removal

1. Push the modulator unit connector lock (C), and turn the connector lever (D).
2. Disconnect the modulator unit connector (B).
3. Disconnect the brake pipes, then remove the modulator unit (A).

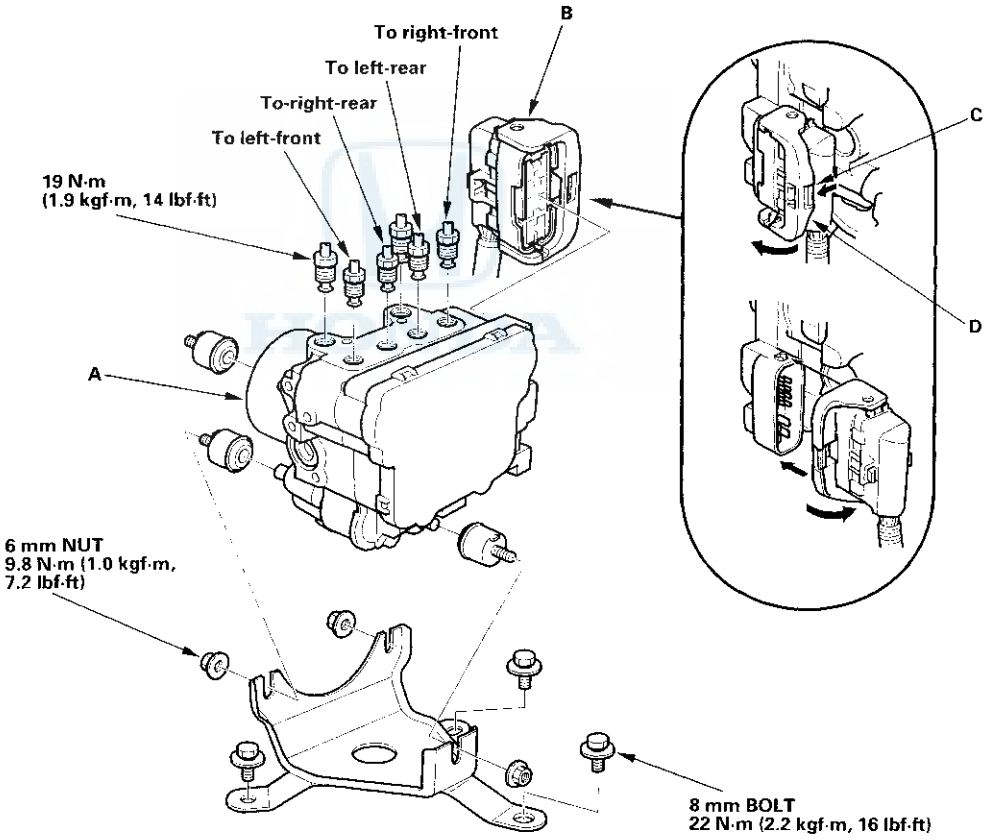

Installation

1. Install the modulator unit in the reverse order of removal.
2. Bleed the brake system, starting with the front wheels.
3. Start the engine, and check that the ABS indicator and the TCS indicator go off.
4. Test-drive the vehicle, and check that the ABS indicator and the TCS indicator do not come on.

TCS Switch Test

1. Remove the cruise control/TCS switch (A) from the switch panel.

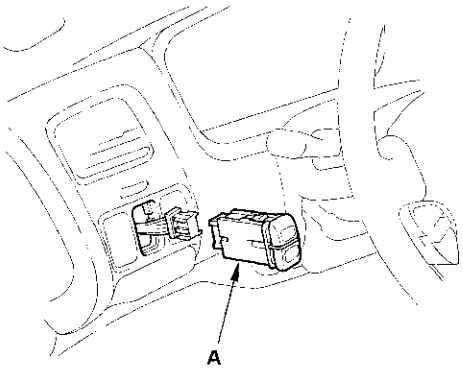

2. Check for continuity between terminal No. 5 and No. 6. There should be continuity when the TCS switch is pushed.

CRUISE CONTROL/TCS SWITCH CONNECTOR

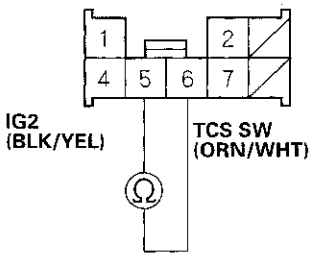

Wire side of female terminals

ABS/TCS Control Unit Replacement

1. Remove the passenger's side kick panel.
2. Remove the ABS/TCS control unit (A).

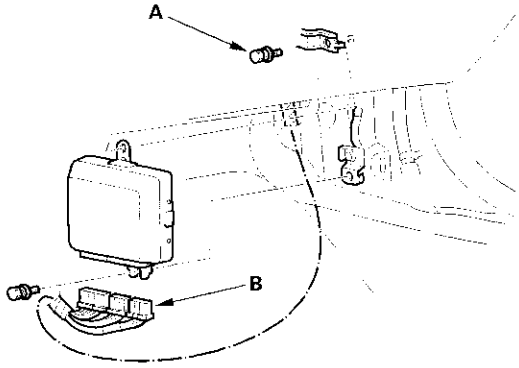

3. Disconnect the ABS/TCS control unit connectors (B).
4. Install the ABS/TCS control unit in the reverse order of removal.

Wheel Sensor Inspection

1. Inspect the front and rear pulsers for chipped or damaged teeth.
2. Measure the air gap between the wheel sensor and pulser all the way around while rotating the pulser. Remove the rear brake disc to measure the gap on the rear wheel sensor. If the gap exceeds 1.0 mm (0.04 in), check for a bent suspension arm.

Standard:
Front: 0.4 – 1.05 mm (0.02 – 0.04 in)
Rear: 0.19 – 1.14 mm (0.01 – 0.05 in)

Front

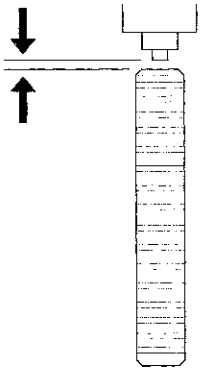

Rear

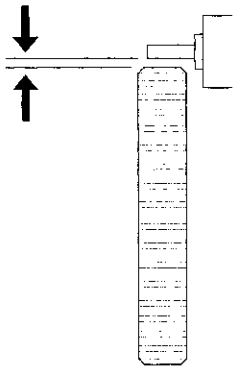

Wheel Sensor Replacement

Install the sensors carefully to avoid twisting wires.

Front

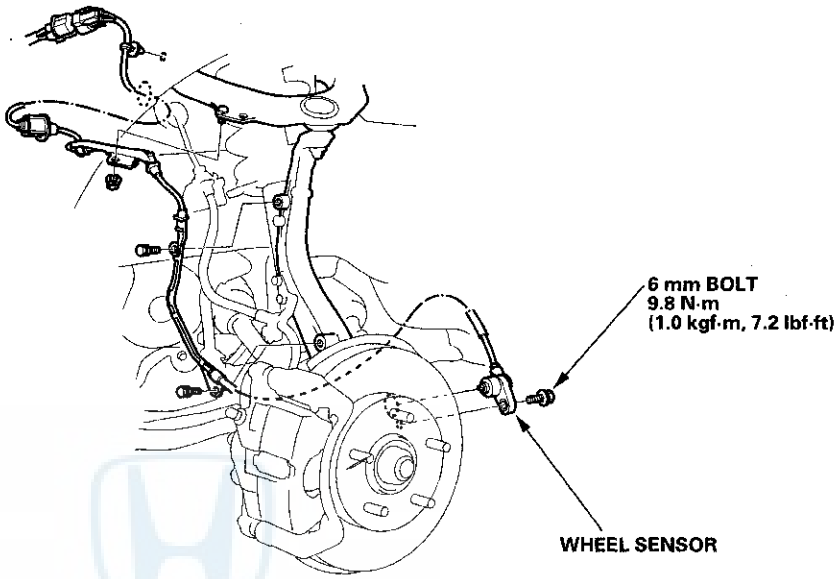

Rear

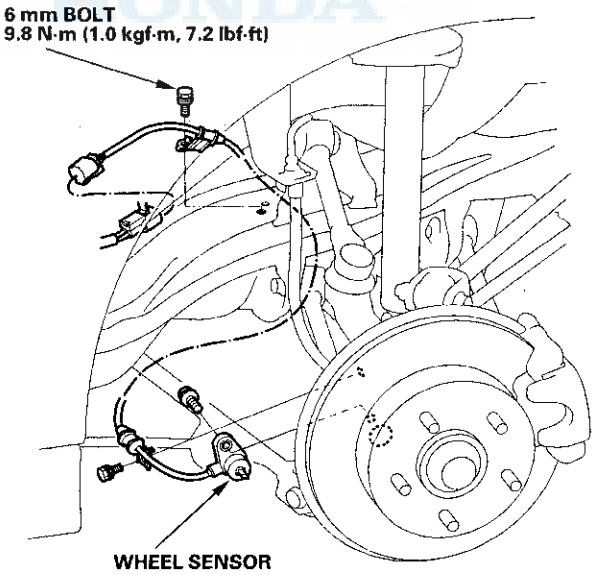

SUPPLEMENTAL RESTRAINT SYSTEM (SRS) (If body maintenance is required)

The Accord Sedan/Coupe (V6) SRS includes a driver's airbag located in the steering wheel hub, a passenger's airbag located in the dashboard above the glove box, and side airbags ('00-01 models) located in the front seat-backs. Information necessary to safely service the SRS is included in the '98-01 Accord Sedan/Coupe (L4) Service Manual, P/N 61S8008. Items marked with an asterisk (*) on the contents page include or are located near SRS components. Servicing, disassembling or replacing these items will require special precautions and tools, and should therefore be done by and authorized Honda dealer.

- To avoid rendering the SRS inoperative, which could lead to personal injury or death in the event of a severe frontal collision, all SRS service work must be performed by an authorized Honda dealer.
- Improper service procedures, including incorrect removal and installation of the SRS, could lead to personal injury caused by unintentional deployment of the frontal airbags (and/or side airbags on some '00-01 models).
- Do not bump the SRS unit, Otherwise, the system may fail in case of a collision, or the airbags may deploy when the ignition switch is ON (II).
- SRS electrical wiring harnesses are indicated with yellow color coding. Related components are located in the steering column, front console, dashboard, dashboard lower panel, in the dashboard above the glove box, in the front seats ('00-01 models) and around the floor ('00-01 models). Do not use electrical test equipment on these circuits.

Body

NOTE: Refer to the 1998 - 2001 Accord Service Manual (P/N 61S8008) for the items not shown in this section.

Outline of V6 Model Changes

1998 model:

- The Accord sedan and coupe V6 model has been added.
  - The V6 emblem has been added.
  - The hood replacement procedure is different.
  - The sub-frames are different.
  - The frame repair chart is different.

2001 model:

- The following item has been added on Sedan or Coupe V6 model.
  - The passenger's 4 way power seat (sedan)
  - The rear bumper spoiler (coupe)

Front Seat Removal/Installation - 4-Way Power - Sedan

'01 model:
SRS components are located in this area. Review the SRS component locations and precautions and procedures in the SRS section before performing repairs or service. Refer to '98-01 ACCORD Service Manual, P/N 61S8008 (see page 23-28).

1. Make sure you have the anti-theft code for the radio, then write down the frequencies for the radio's preset buttons.

2. Disconnect the negative cable from the battery, and wait at least 3 minutes before beginning work.

3. Remove the seat track end covers (A), and remove the bolts securing the front seat (B). When prying with a flat-tip screwdriver, wrap it with protective tape to prevent damage. Take care not to scratch the body or tear the seat covers.

Fastener Locations

▶ : Bolt, 4

10 x 1.25 mm
34 N·m (3.5 kgf·m, 25 lbf·ft)

▷ : Clip, 1

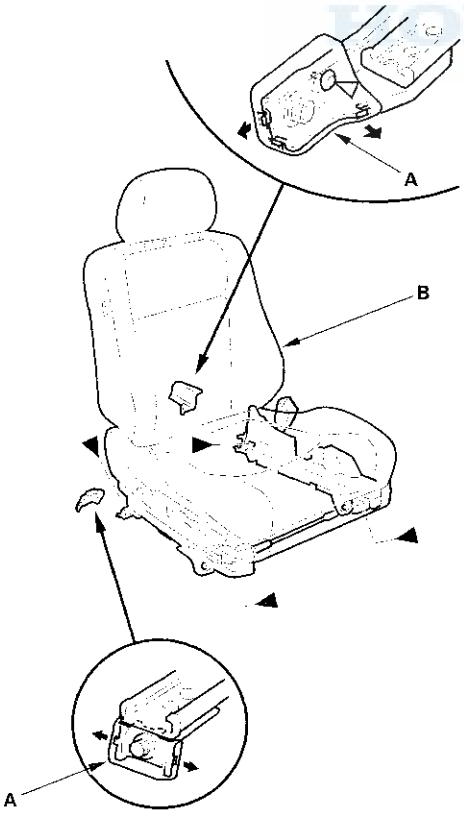

4. Lift up the front seat, then disconnect and detach the seat harness connector (A) and harness clip (B).

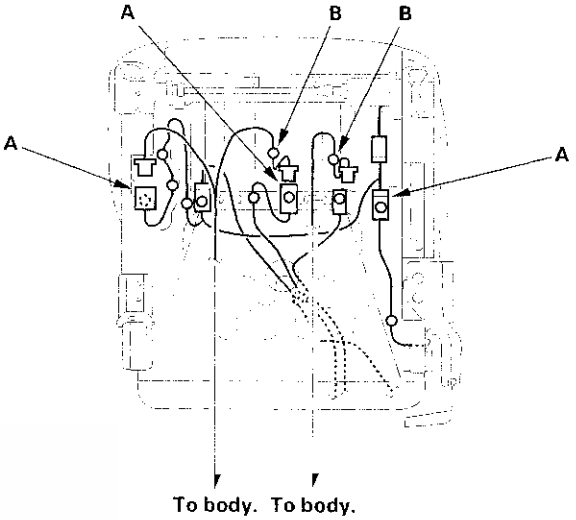

5. With the help of an assistant, carefully remove the front seat through the front door opening.

6. Install the front seat in the reverse order of removal, and note these item:

   - Replace the damaged track and cover clip.
   - Make sure the seat harness connector is plugged in properly.
   - Enter the anti-there code for the radio, then enter the customer's radio station presets.

Front Seat Disassembly/Reassembly - 4-Way Power - Sedan

'01 model:
SRS components are located in this area. Review the SRS component locations, and precautions and procedures in the SRS section before performing repairs or service. Refer to '98-01 ACCORD Service Manual, P/N 61S8008 (see page 23-28).

Disassembly the front sent as shown.
Reassemble the seat in the reverse order of disassembly, and note these items:

- Route the seat wire harness correctly (see page 20-5).
- Make sure the bushing and pivot washer are installed correctly.
- Apply multipurpose grease to the moving portion of the seat track.
- To prevent wrinkles in the seat-back cover, stretch the material evenly over the pad.
- If the seat-back pad or the OPDS unit is replaced, reinitialize the OPDS unit. Refer to '98-01 ACCORD Service Manual, P/N 61S8008 (see page 23-322).

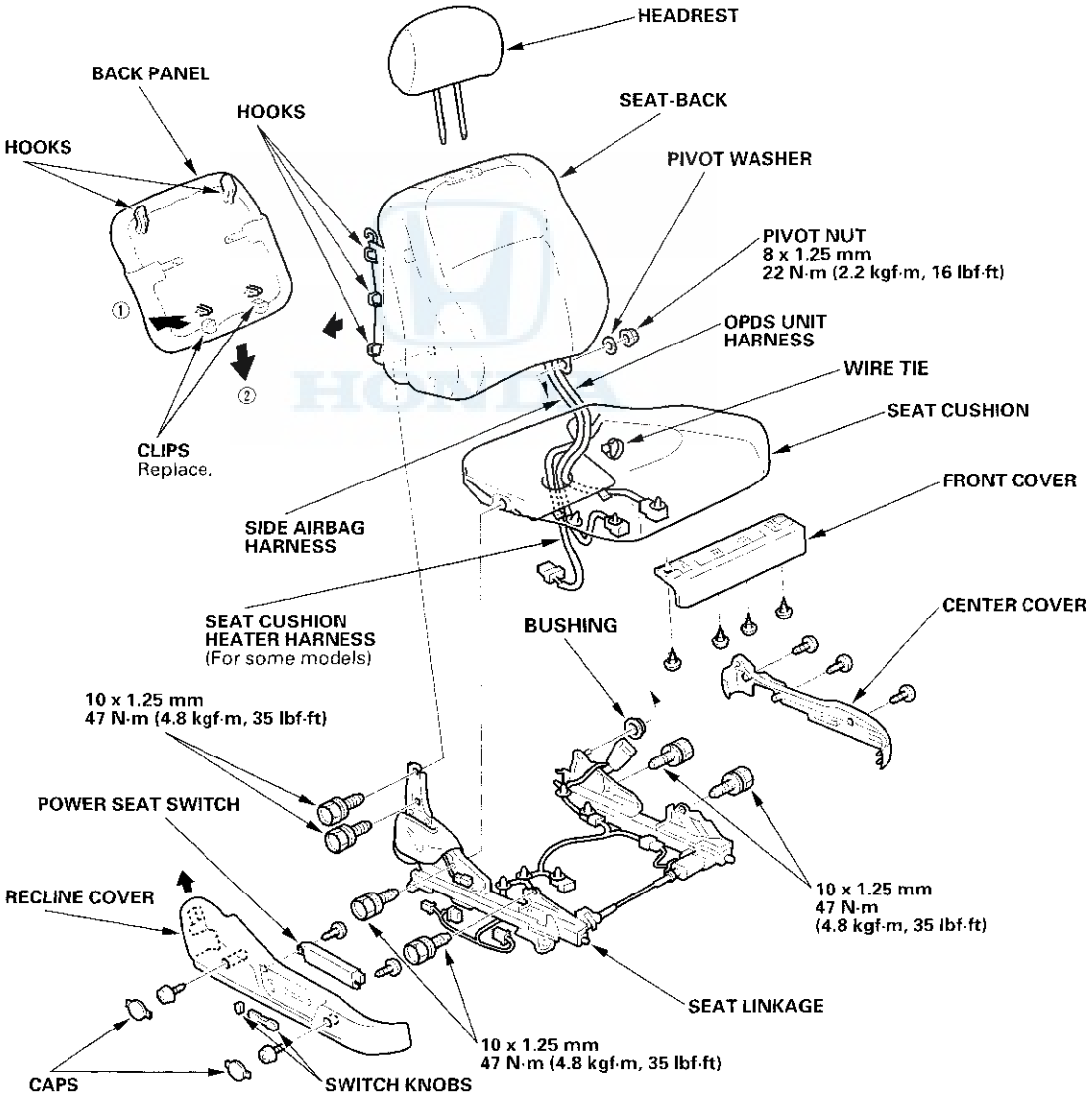

Front Seat Linkage Disassembly/Reassembly - 4-Way Power - Sedan

'01 model:

NOTE:
- Put on gloves to protect your hands.
- To remove the slide motor and slide gearbox, slide the front seat backward fully.

Disassemble the linkage as shown.

Reassemble the linkage in the reverse order of disassembly, and note these items:

- Before installing the slide motor and slide gearbox, align portion (A) as shown to align both slide gearbox positions.
- Apply multipurpose grease to the sliding and pivot portions of the linkage.
- Check operation of the recline and slide adjusters.

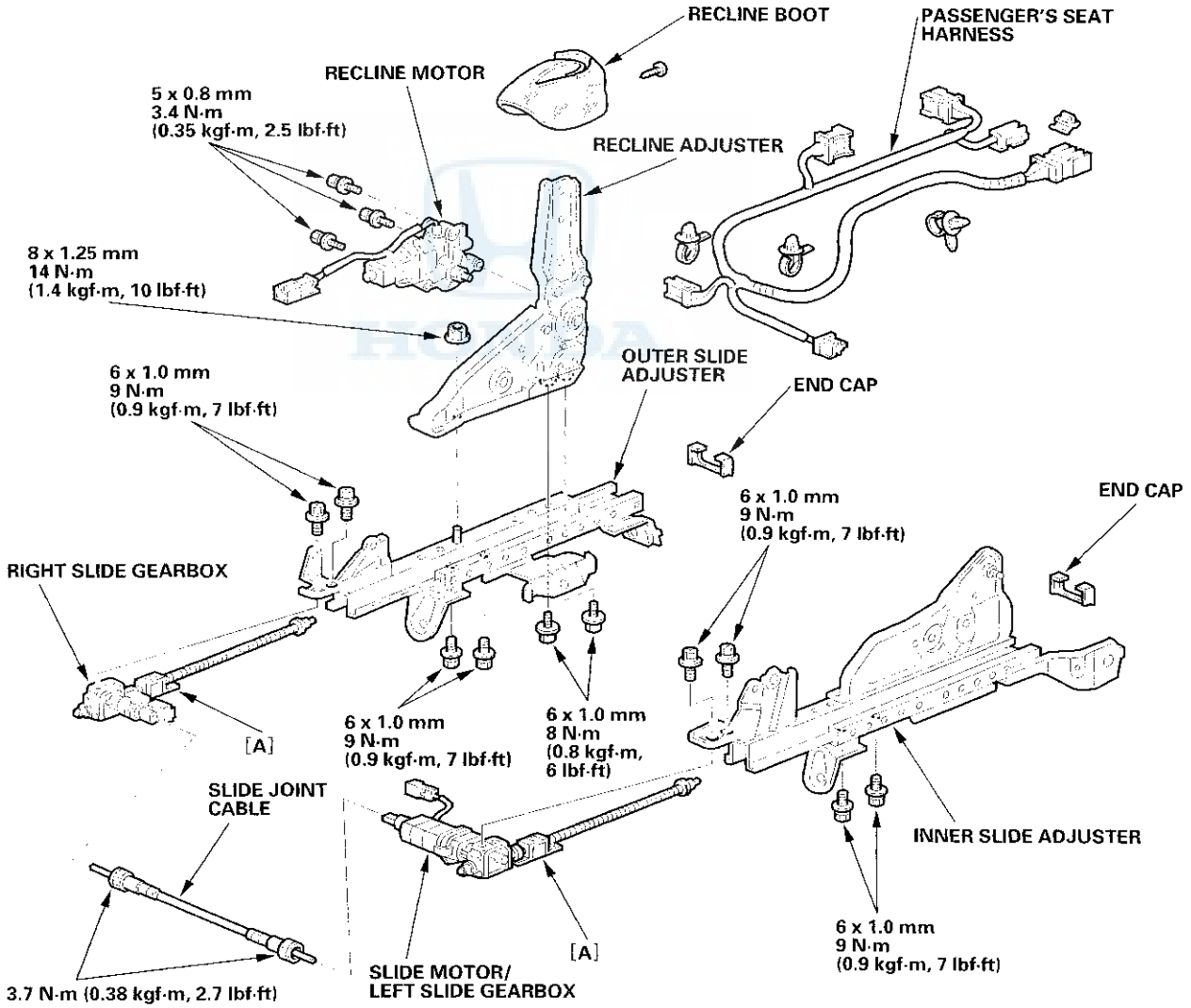

Front Seat Wire Harness Installation - 4-Way Power - Sedan

'01 model:

When assembling the front seat, make sure the seat belt switch harness (A), seat harness (B), seat heater harnesses (C), side airbag harness (D), OPDS unit harness (E), connectors (F), clips (G) and wire tie (H) are fastened correctly.

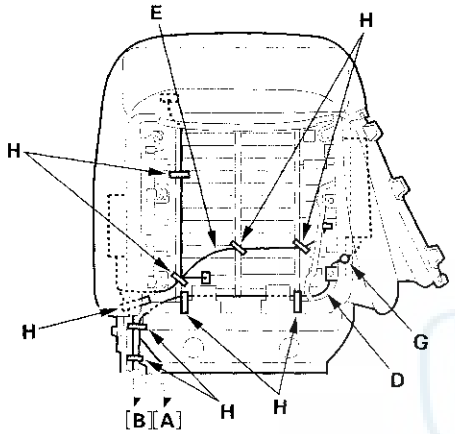

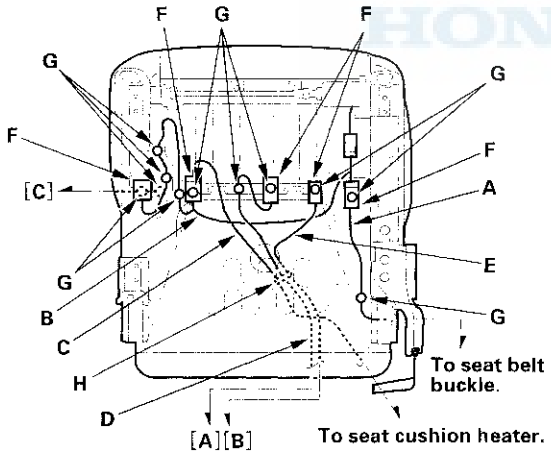

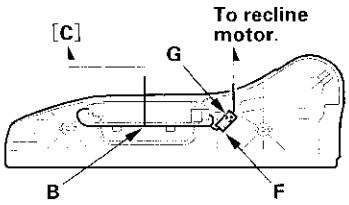

Rear Bumper Spoiler Replacement - Coupe

'01 model:

NOTE: Take care not to scratch the rear bumper.
Remove the rear bumper spoiler as shown.
Install the spoiler in the reverse order of removal, and replace any damaged clips.

Fastener Locations

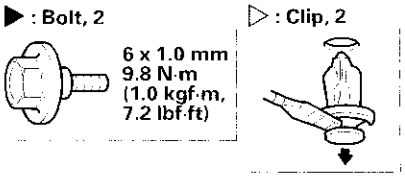

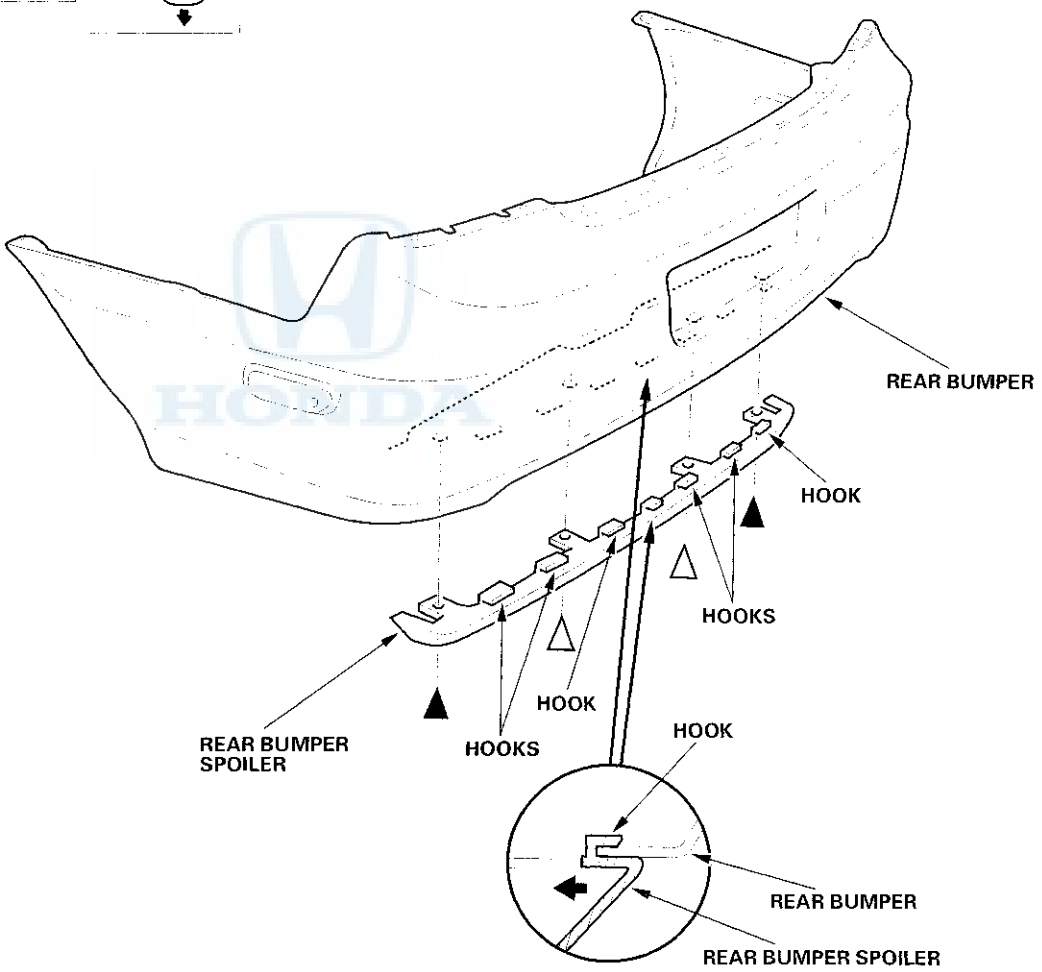

Replacement

1. Disconnect the windshield washer tubes (A) from the windshield washer nozzles (B), and release the windshield washer tube from the clips (C).

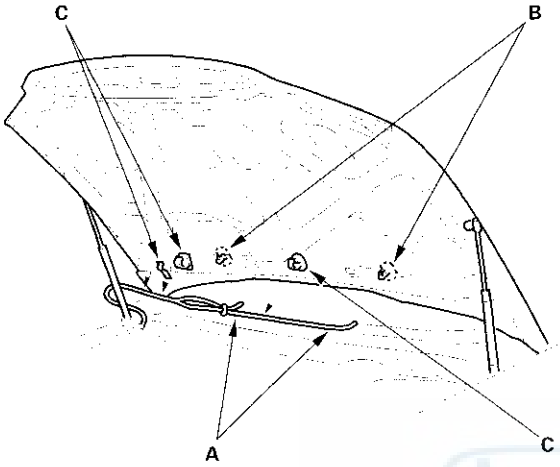

2. With a flat-tip screwdriver, pry the clips (A) out of the support struts (B) on each hood side, then release both support struts from the pivot bolts (C) with the help of an assistant. Do not remove the clips from the support struts. If necessary, release the support strut from the pivot bolt on the body, then remove the support strut.

Fastener Locations

▶ : Bolt, 4

6 x 1.0 mm
9.8 N·m (1.0 kgf·m, 7.2 lbf·ft)

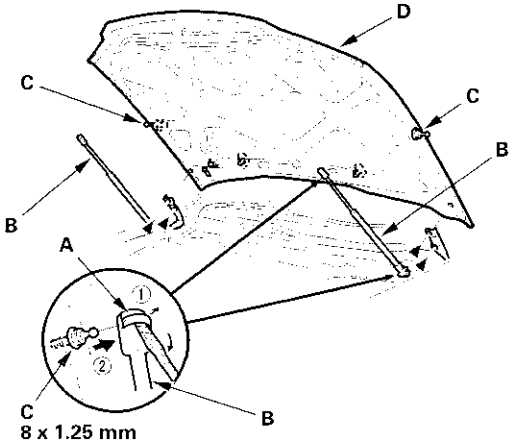

8 x 1.25 mm
22 N·m (2.2 kgf·m, 16 lbf·ft)

3. With the help of an assistant, remove the bolts, then remove the hood (D). Take care not to damage the hood and body.

4. Install the hood in the reverse order of removal, and note these items:

- Before reattaching the support struts, adjust the hood alignment.
- Make sure the hood opens properly and locks securely.
- Make sure the windshield washer tubes are connected properly.
- When reattaching the support struts, set the clips (A) to the original position, then attach the support struts (B) on the pivot bolts (C) by pushing the support strut.

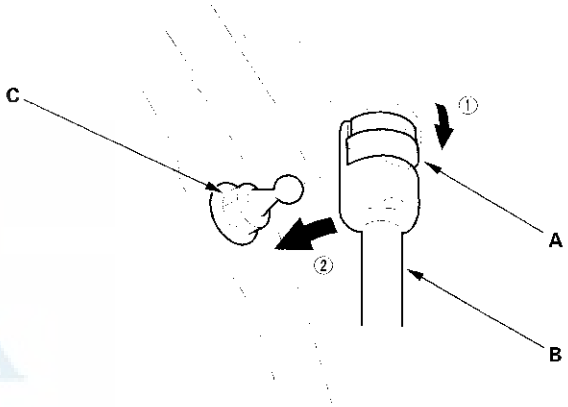

Emblem Replacement - Coupe

Apply the emblem where shown.

NOTE:
- Before applying, clean the rear bumper surface with a sponge dampened in alcohol.
- After cleaning, keep oil, grease and water from getting on the surface.

Attachment Point (Reference):

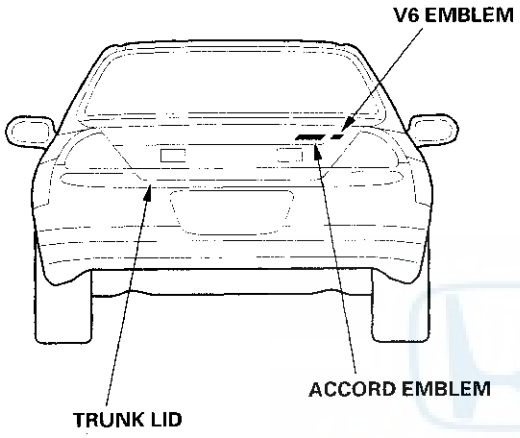

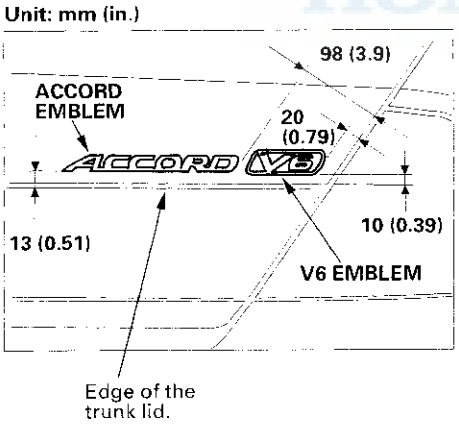

Emblem Replacement - Sedan

Apply the emblem where shown.

NOTE:
- Before applying, clean the rear bumper surface with a sponge dampened in alcohol.
- After cleaning, keep oil, grease and water from getting on the surface.

Attachment Point (Reference):

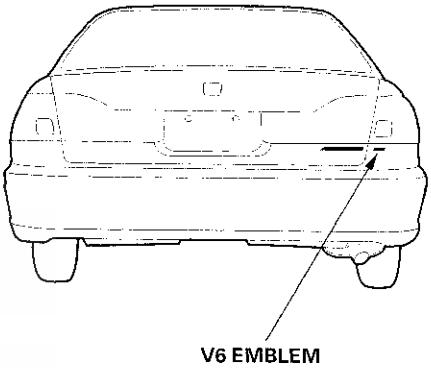

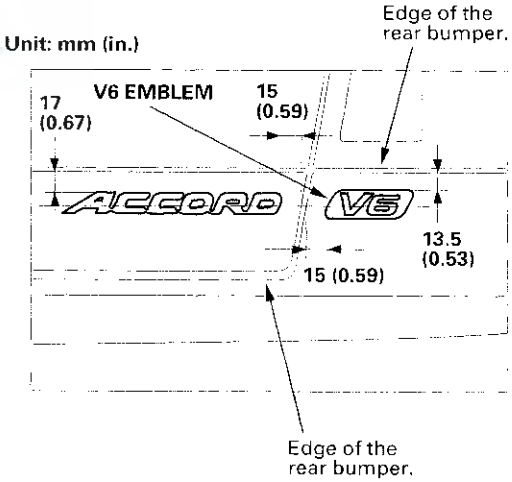

Sub-frame Replacement

After loosening the sub-frame mounting bolts, be sure to replace them with new ones.

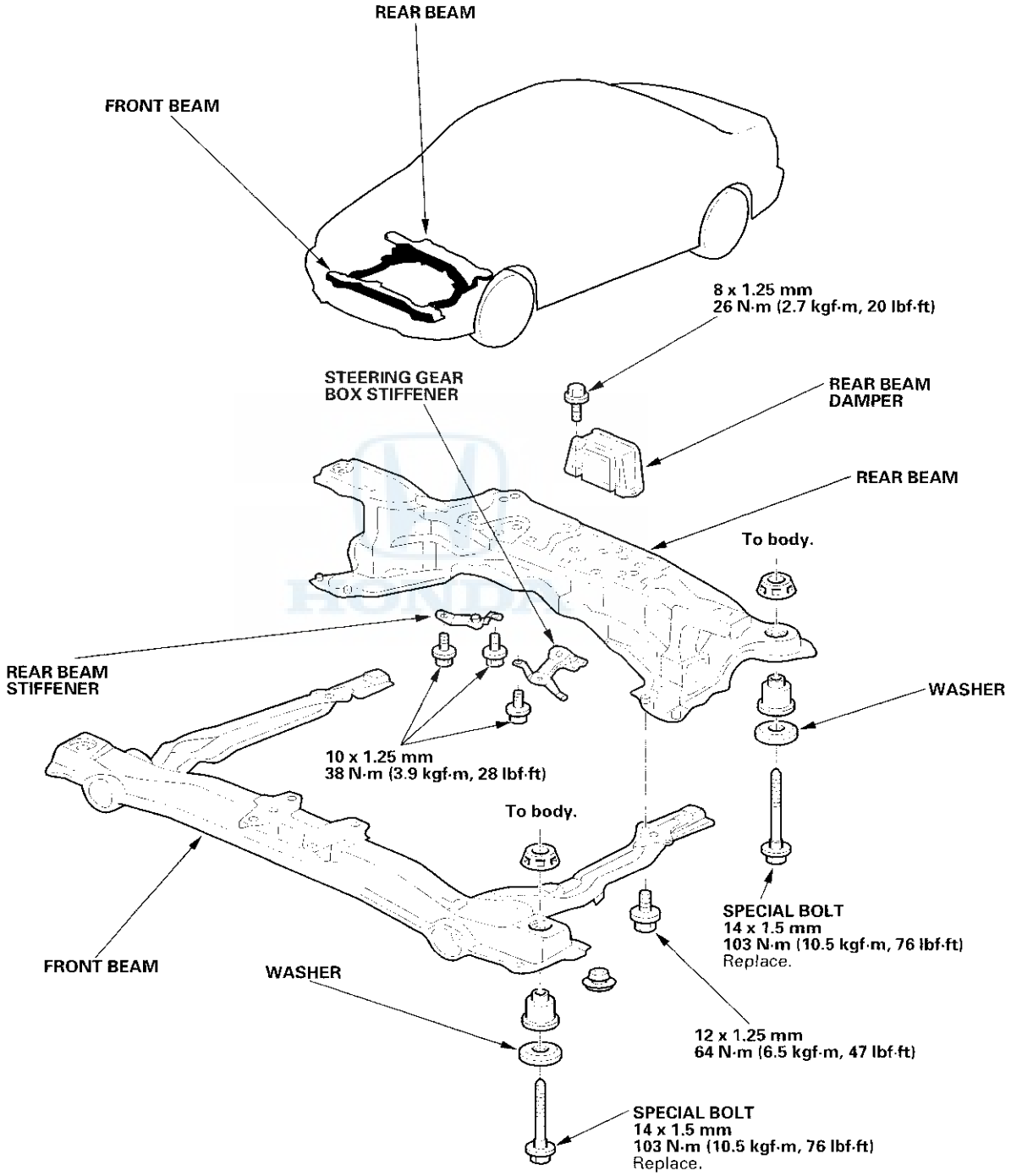

(cont'd)

Sub-frame Replacement (cont'd)

After loosening the sub-frame mounting bolts, be sure to replace them with new ones.

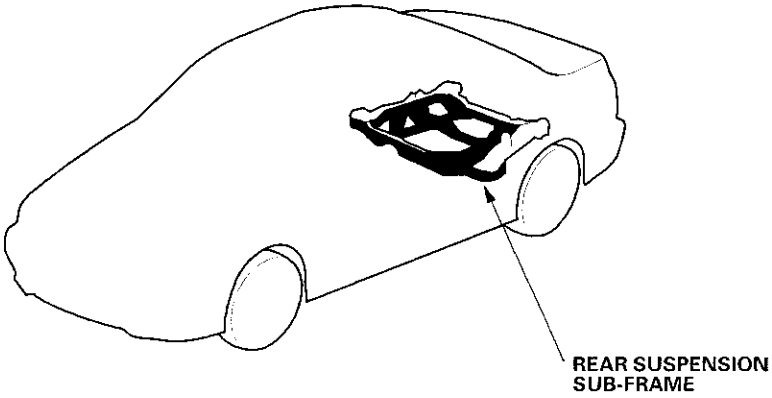

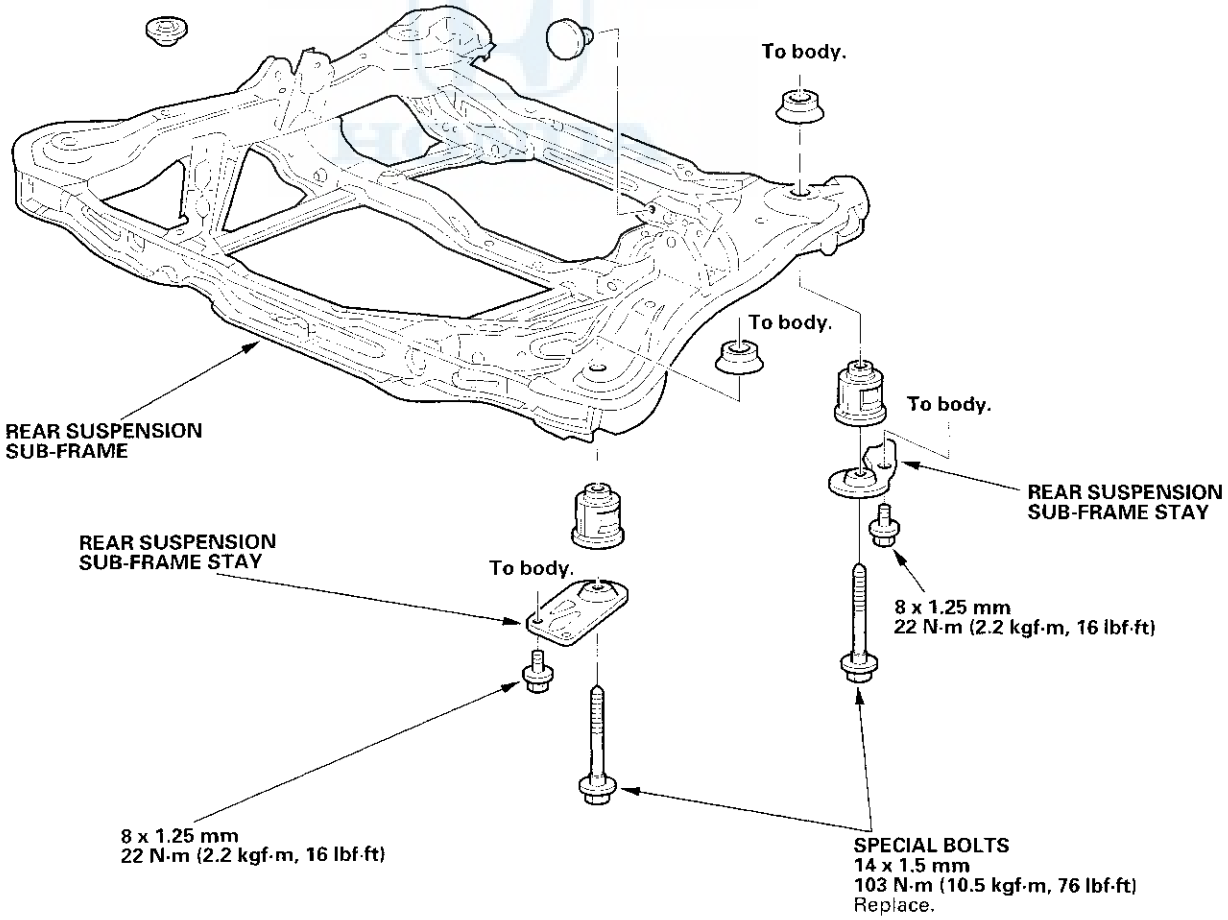

Frame Repair Chart

Top View

Unit : mm (in.)
ø: Inner diameter

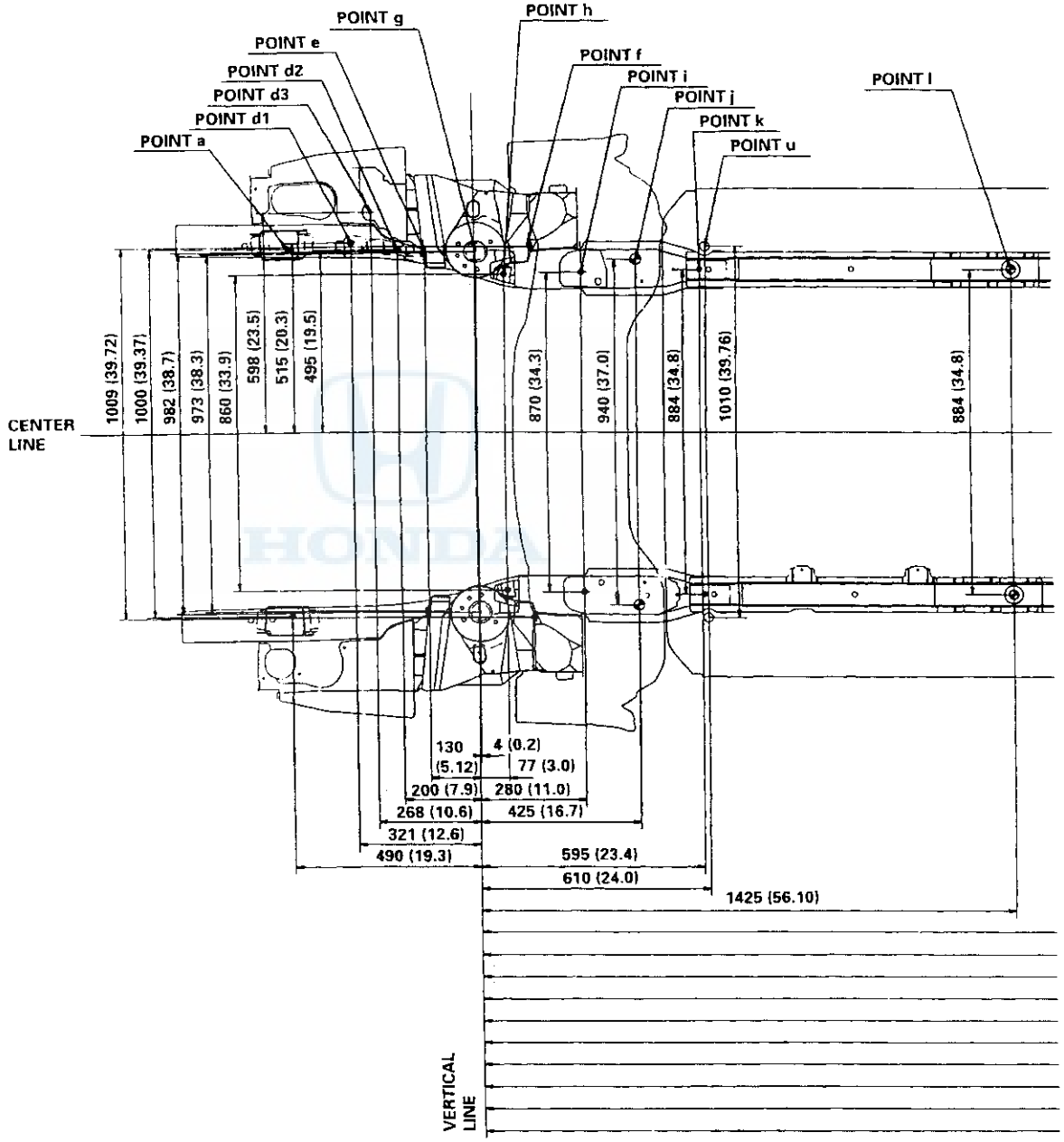

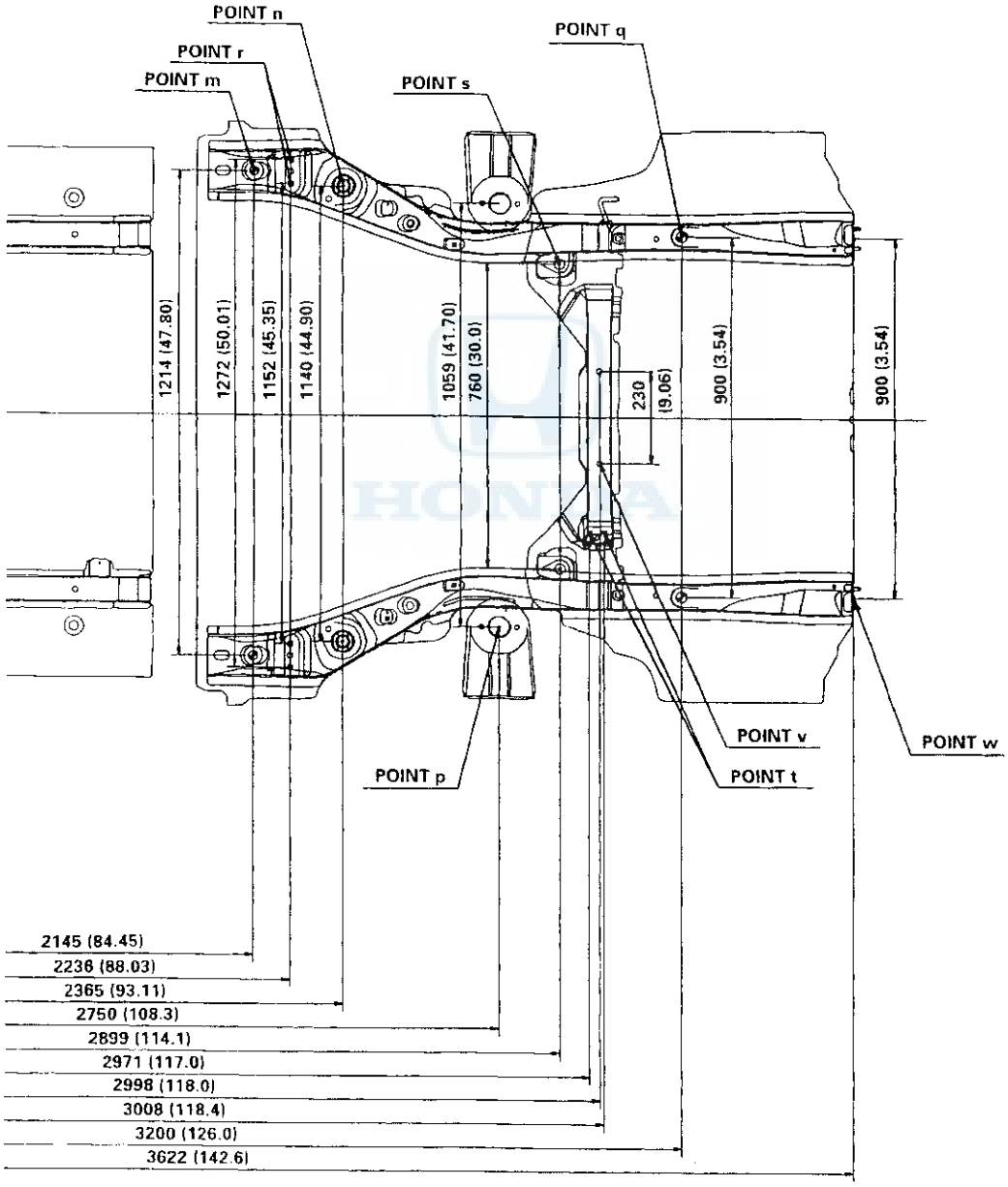
POINT n
POINT r
POINT m
POINT s
POINT q
1214 (47.80)
1272 (50.01)
1152 (45.35)
1140 (44.90)
1059 (41.70)
760 (30.0)
230
(9.06)
900 (3.54)
900 (3.54)
POINT v
POINT w
POINT p
POINT t
2145 (84.45)
2236 (88.03)
2365 (93.11)
2750 (108.3)
2899 (114.1)
2971 (117.0)
2998 (118.0)
3008 (118.4)
3200 (126.0)
3622 (142.6)

(cont'd)

Frame Repair Chart (cont'd)

Side View

Unit : mm (in.)
ø: Inner diameter

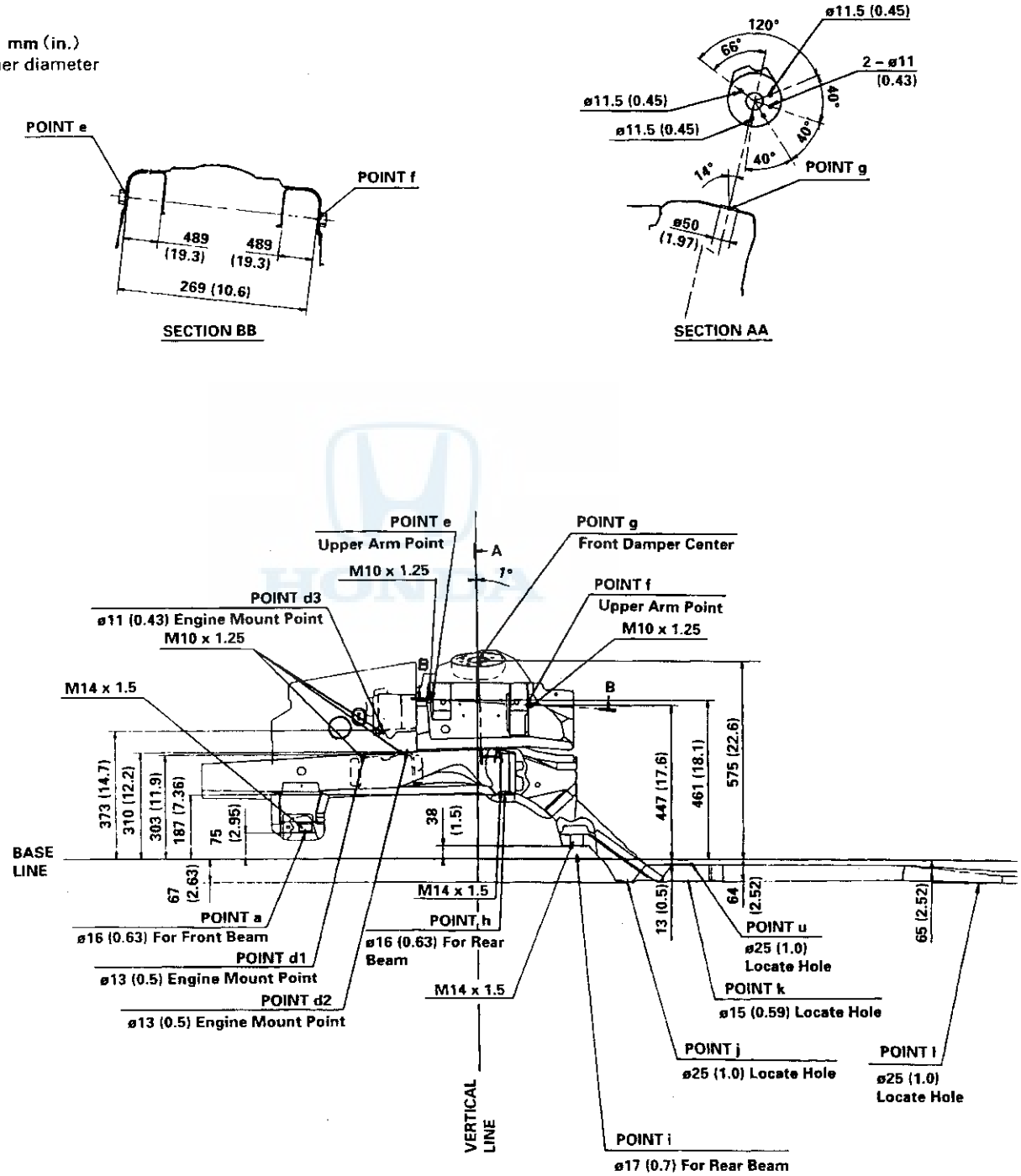

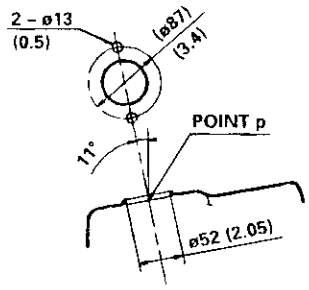
2 – ø13
(0.5)
(ø87)
(3.4)
POINT p
11°
ø52 (2.05)

SECTION DD

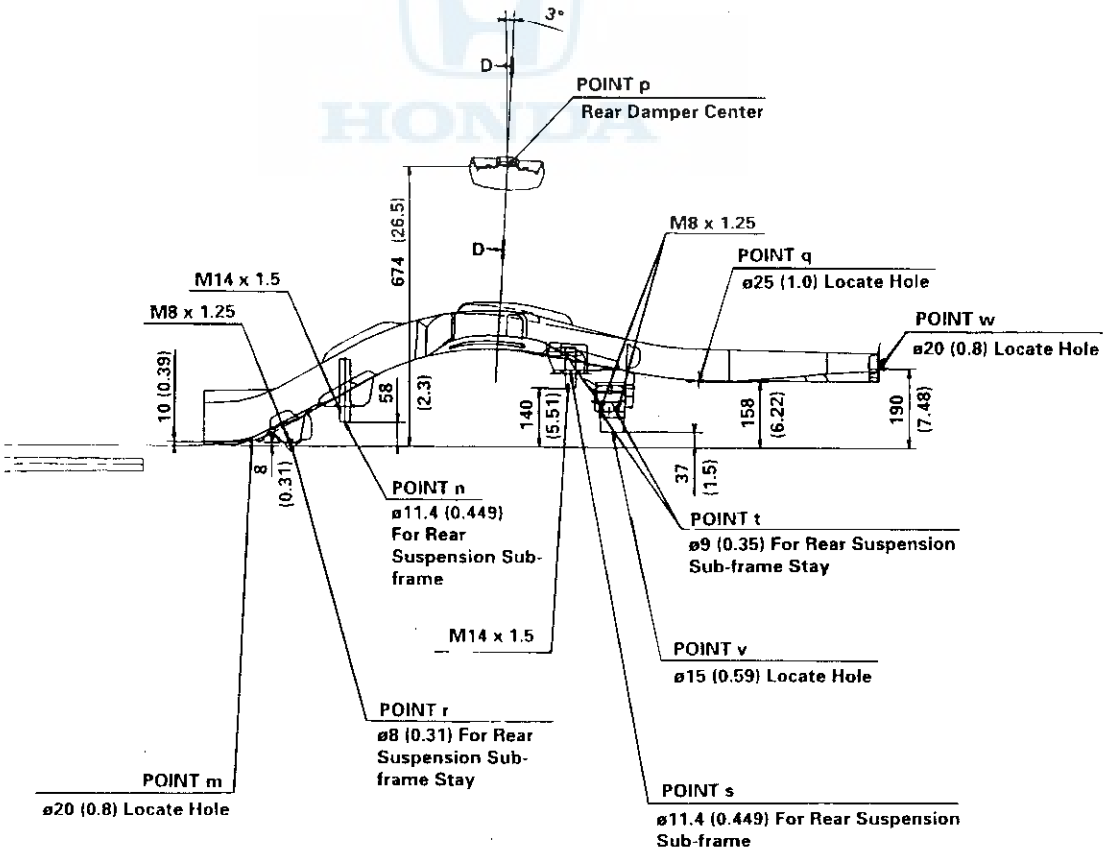
3°
D
POINT p
Rear Damper Center
674 (26.5)
D
M8 x 1.25
POINT q
ø25 (1.0) Locate Hole
M14 x 1.5
M8 x 1.25
POINT w
ø20 (0.8) Locate Hole
10 (0.39)
58
(2.3)
140
(5.51)
158
(6.22)
190
(7.48)
8
(0.31)
37
(1.5)
POINT n
ø11.4 (0.449)
For Rear
Suspension Sub-
frame
POINT t
ø9 (0.35) For Rear Suspension
Sub-frame Stay
M14 x 1.5
POINT v
ø15 (0.59) Locate Hole
POINT r
ø8 (0.31) For Rear
Suspension Sub-
frame Stay
POINT m
ø20 (0.8) Locate Hole
POINT s
ø11.4 (0.449) For Rear Suspension
Sub-frame

SUPPLEMENTAL RESTRAINT SYSTEM (SRS) (If HVAC maintenance is required)

The Accord Sedan/Coupe (V6) SRS includes a driver's airbag located in the steering wheel hub, a passenger's airbag located in the dashboard above the glove box, and side airbags ('00-01 models) located in the front seat-backs. Information necessary to safely service the SRS is included in the '98-01 Accord Sedan/Coupe (L4) Service Manual, P/N 61S8008. Items marked with an asterisk (*) on the contents page include or are located near SRS components. Servicing, disassembling or replacing these items will require special precautions and tools, and should therefore be done by and authorized Honda dealer.

- To avoid rendering the SRS inoperative, which could lead to personal injury or death in the event of a severe frontal collision, all SRS service work must be performed by an authorized Honda dealer.
- Improper service procedures, including incorrect removal and installation of the SRS, could lead to personal injury caused by unintentional deployment of the frontal airbags (and/or side airbags on some '00-01 models).
- Do not bump the SRS unit, Otherwise, the system may fail in case of a collision, or the airbags may deploy when the ignition switch is ON (II).
- SRS electrical wiring harnesses are indicated with yellow color coding. Related components are located in the steering column, front console, dashboard, dashboard lower panel, in the dashboard above the glove box, in the front seats ('00-01 models) and around the floor ('00-01 models). Do not use electrical test equipment on these circuits.

HVAC (Heating, Ventilation, and Air Conditioning)

Air Conditioning

Climate Control

Refer to the 1998-2001 Accord Service Manual (P/N 61S8008) for items not shown in this section.

Outline of V6 Model Change

The air conditioning and climate control has been changed to suit the Accord V6.

Special Tools

Ref.No.	Tool Number	Description	Qty
①	07SAZ-001000A	Backprobe Set	2

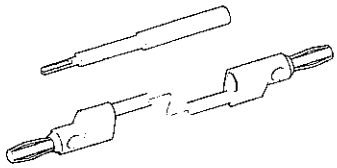

①

Component Location Index

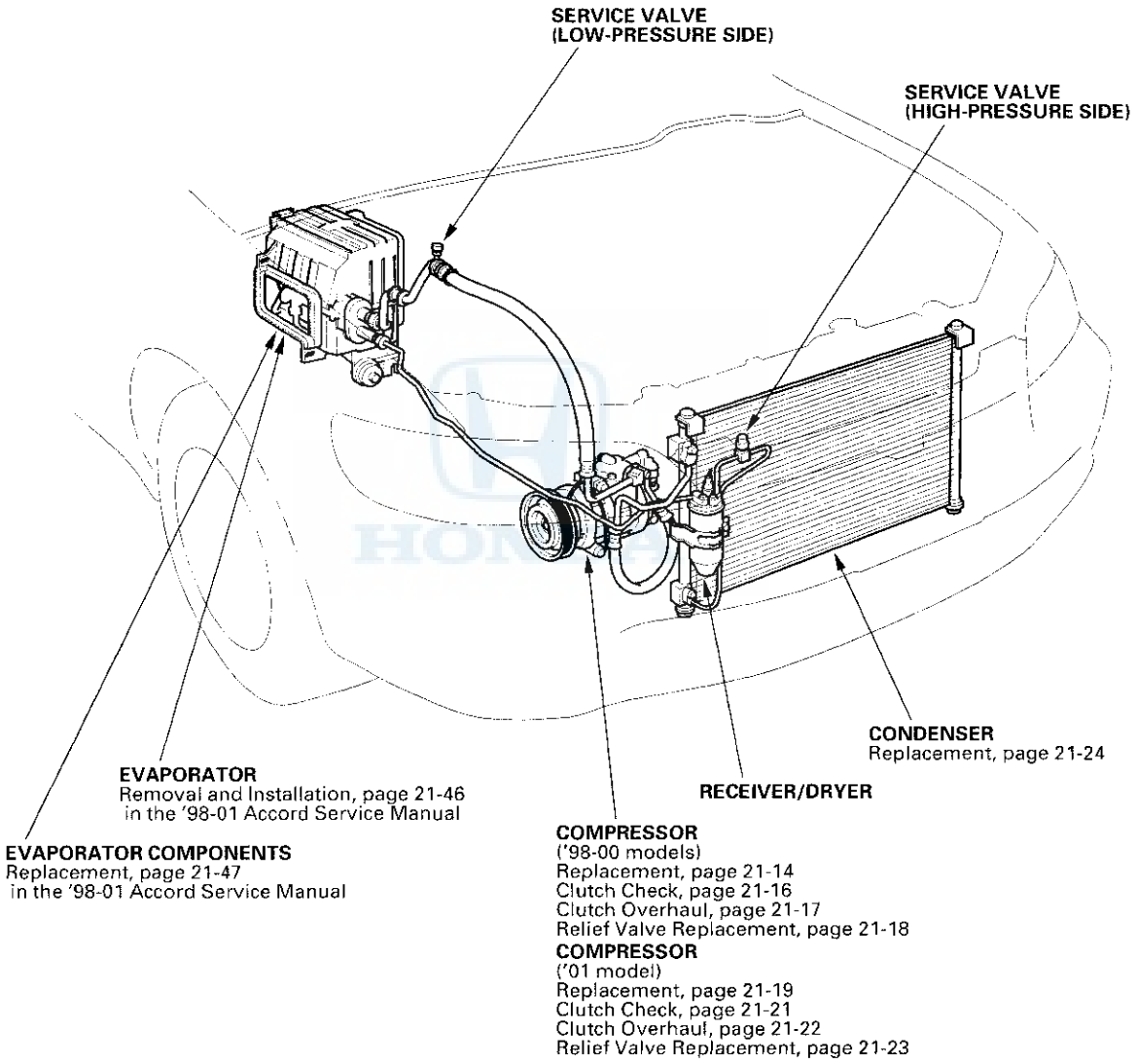

(cont'd)

Component Location Index (cont'd)

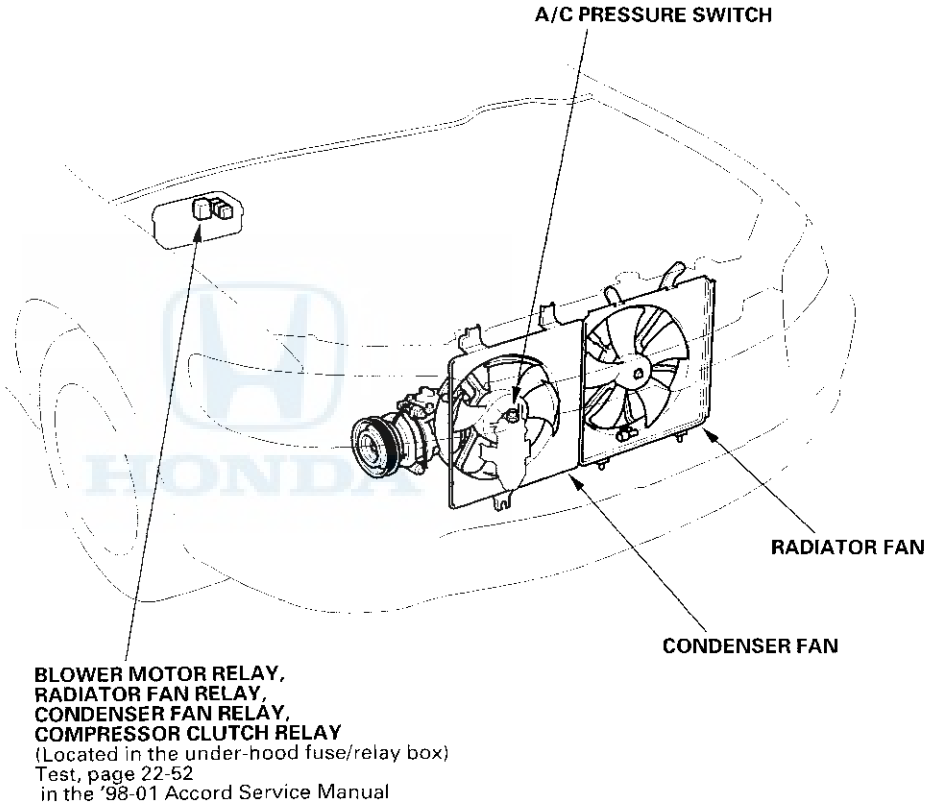

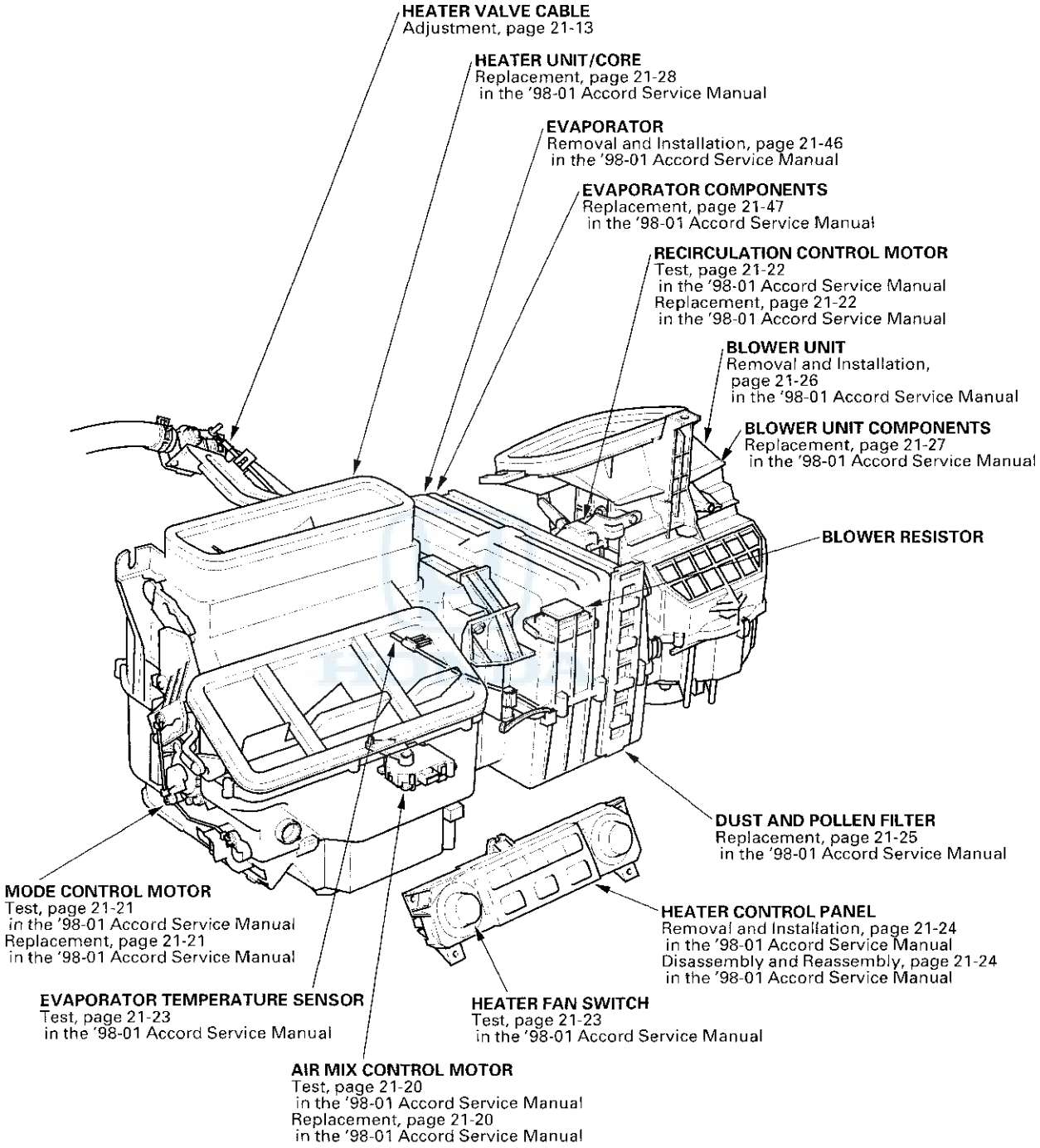
HEATER VALVE CABLE
Adjustment, page 21-13
HEATER UNIT/CORE
Replacement, page 21-28
in the '98-01 Accord Service Manual
EVAPORATOR
Removal and Installation, page 21-46
in the '98-01 Accord Service Manual
EVAPORATOR COMPONENTS
Replacement, page 21-47
in the '98-01 Accord Service Manual
RECIRCULATION CONTROL MOTOR
Test, page 21-22
in the '98-01 Accord Service Manual
Replacement, page 21-22
in the '98-01 Accord Service Manual
BLOWER UNIT
Removal and Installation,
page 21-26
in the '98-01 Accord Service Manual
BLOWER UNIT COMPONENTS
Replacement, page 21-27
in the '98-01 Accord Service Manual
BLOWER RESISTOR
DUST AND POLLEN FILTER
Replacement, page 21-25
in the '98-01 Accord Service Manual
MODE CONTROL MOTOR
Test, page 21-21
in the '98-01 Accord Service Manual
Replacement, page 21-21
in the '98-01 Accord Service Manual
HEATER CONTROL PANEL
Removal and Installation, page 21-24
in the '98-01 Accord Service Manual
Disassembly and Reassembly, page 21-24
in the '98-01 Accord Service Manual
EVAPORATOR TEMPERATURE SENSOR
Test, page 21-23
in the '98-01 Accord Service Manual
HEATER FAN SWITCH
Test, page 21-23
in the '98-01 Accord Service Manual
AIR MIX CONTROL MOTOR
Test, page 21-20
in the '98-01 Accord Service Manual
Replacement, page 21-20
in the '98-01 Accord Service Manual

A/C Refrigerant Oil Replacement

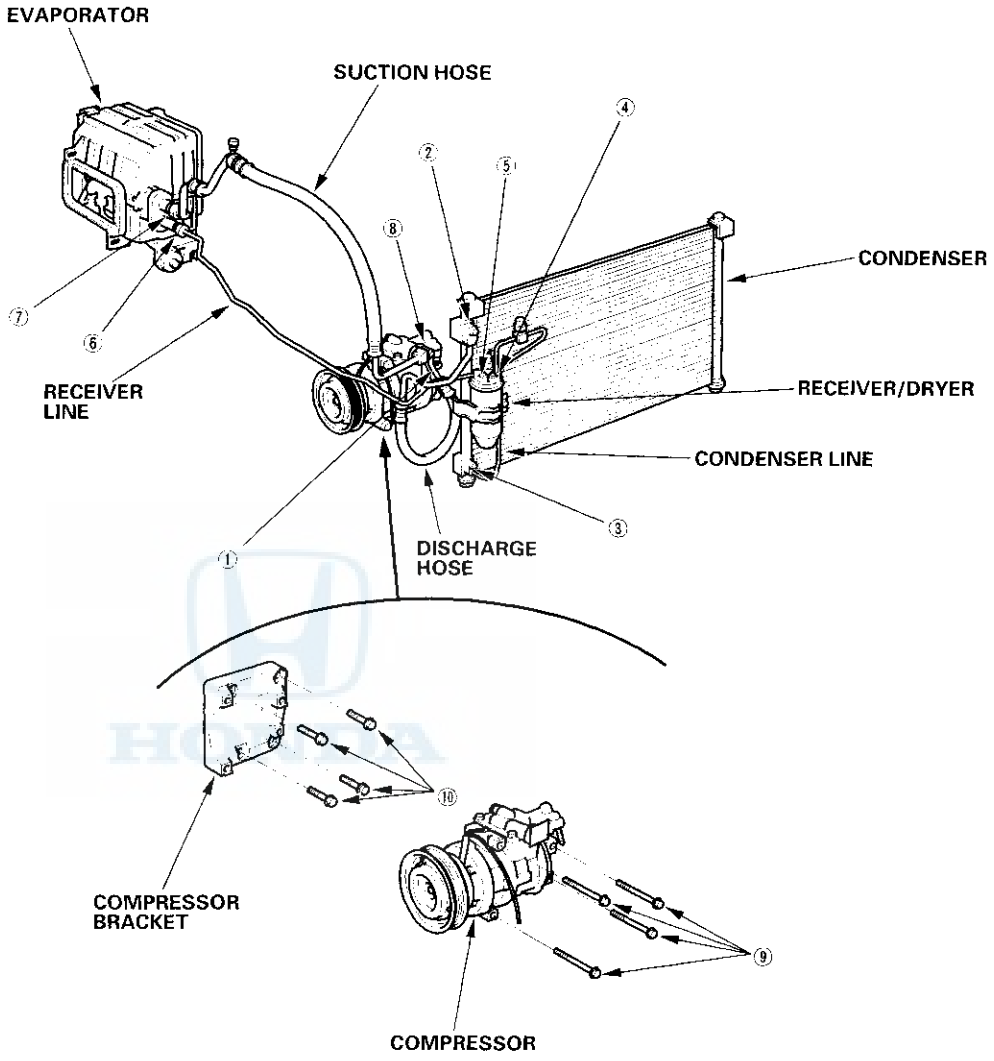

① Discharge hose to the compressor (6 x 1.0 mm) : 9.8 N·m (1.0 kgf·m, 7.2 lbf·ft)
② Discharge hose to the condenser (6 x 1.0 mm) : 9.8 N·m (1.0 kgf·m, 7.2 lbf·ft)
③ Condenser line to the condenser (6 x 1.0 mm) : 9.8 N·m (1.0 kgf·m, 7.2 lbf·ft)
④ Condenser line to the receiver/dryer : 9.8 N·m (1.0 kgf·m, 7.2 lbf·ft)
⑤ Receiver line to the receiver/dryer : 9.8 N·m (1.0 kgf·m, 7.2 lbf·ft)
⑥ Receiver line to the evaporator : 13 N·m (1.3 kgf·m, 9.4 lbf·ft)
⑦ Suction hose to the evaporator : 31 N·m (3.2 kgf·m, 23 lbf·ft)
⑧ Suction hose to the compressor (6 x 1.0 mm) : 9.8 N·m (1.0 kgf·m, 7.2 lbf·ft)
⑨ Compressor to compressor bracket (8 x 1.25 mm) : 22 N·m (2.2 kgf·m, 16 lbf·ft)
⑩ Compressor bracket to engine block (10 x 1.25 mm) : 44 N·m (4.5 kgf·m, 33 lbf·ft)

Symptom Troubleshooting Index

Symptom	Diagnostic procedure	Also check for
Recirculation control doors do not change between Fresh and Recirculate.	Recirculation Control Motor Circuit Troubleshooting, refer to the '98-01 Accord Service Manual (see page 21-14)	• Blown fuse No. 3 (7.5A) in the driver's under-dash fuse/relay box • Cleanliness and tightness of all connectors
Blower motor runs, but one or more speeds are inoperative.	Blower Motor Circuit Troubleshooting, refer to the '98-01 Accord Service Manual (see page 21-15)	• Blown fuse No. 56 (40A) in the under-hood fuse/relay box, and No. 3 (7.5A) in the driver's under-dash fuse/relay box • Poor ground at G202 and G401 • Cleanliness and tightness of all connectors
Blower motor does not run at all.	Blower Motor Circuit Troubleshooting, refer to the '98-01 Accord Service Manual (see page 21-15)	• Blown fuse No. 56 (40A) in the under-hood fuse/relay box, and No. 3 (7.5A) in the driver's under-dash fuse/relay box • Poor ground at G202 and G401 • Cleanliness and tightness of all connectors
Condenser fan does not run at all (but radiator fan runs with the A/C on).	Condenser Fan Circuit Troubleshooting (see page 21-10)	• Blown fuse No. 58 (20A) in the under-hood fuse/relay box, and No. 3 (7.5A) in the driver's under-dash fuse/relay box • Poor ground at G201 • Cleanliness and tightness of all connectors
Both fans do not run with the A/C on.	Radiator and Condenser Fans Common Circuit Troubleshooting (see page 21-12)	• Blown fuse No. 57 (20A) and No. 58 (20A) in the under-hood fuse/relay box, and No. 3 (7.5A) in the driver's under-dash fuse/relay box • Poor ground at G201 • Cleanliness and tightness of all connectors
Compressor clutch does not engage.	Compressor Clutch Circuit Troubleshooting, refer to the '98-01 Accord Service Manual (see page 21-39)	• Blown fuse No. 58 (20A) in the under-hood fuse/relay box, and No. 3 (7.5A) in the driver's under-dash fuse/relay box • Cleanliness and tightness of all connectors
A/C system does not come on (both fans and compressor).	A/C Pressure Switch Circuit Troubleshooting, refer to the '98-01 Accord Service Manual (see page 21-41)	• Cleanliness and tightness of all connectors
Both heater and A/C do not work.	Heater Control Power and Ground Circuits Troubleshooting, refer to the '98-01 Accord Service Manual (see page 21-19)	• Blown fuse No. 54 (40A) in the under-hood fuse/relay box, No. 3 (7.5A) in the driver's under-dash fuse/relay box, and No. 13 (7.5A) in the passenger's under-dash fuse/relay box • Poor ground at G202 and G401 • Cleanliness and tightness of all connectors

Circuit Diagram

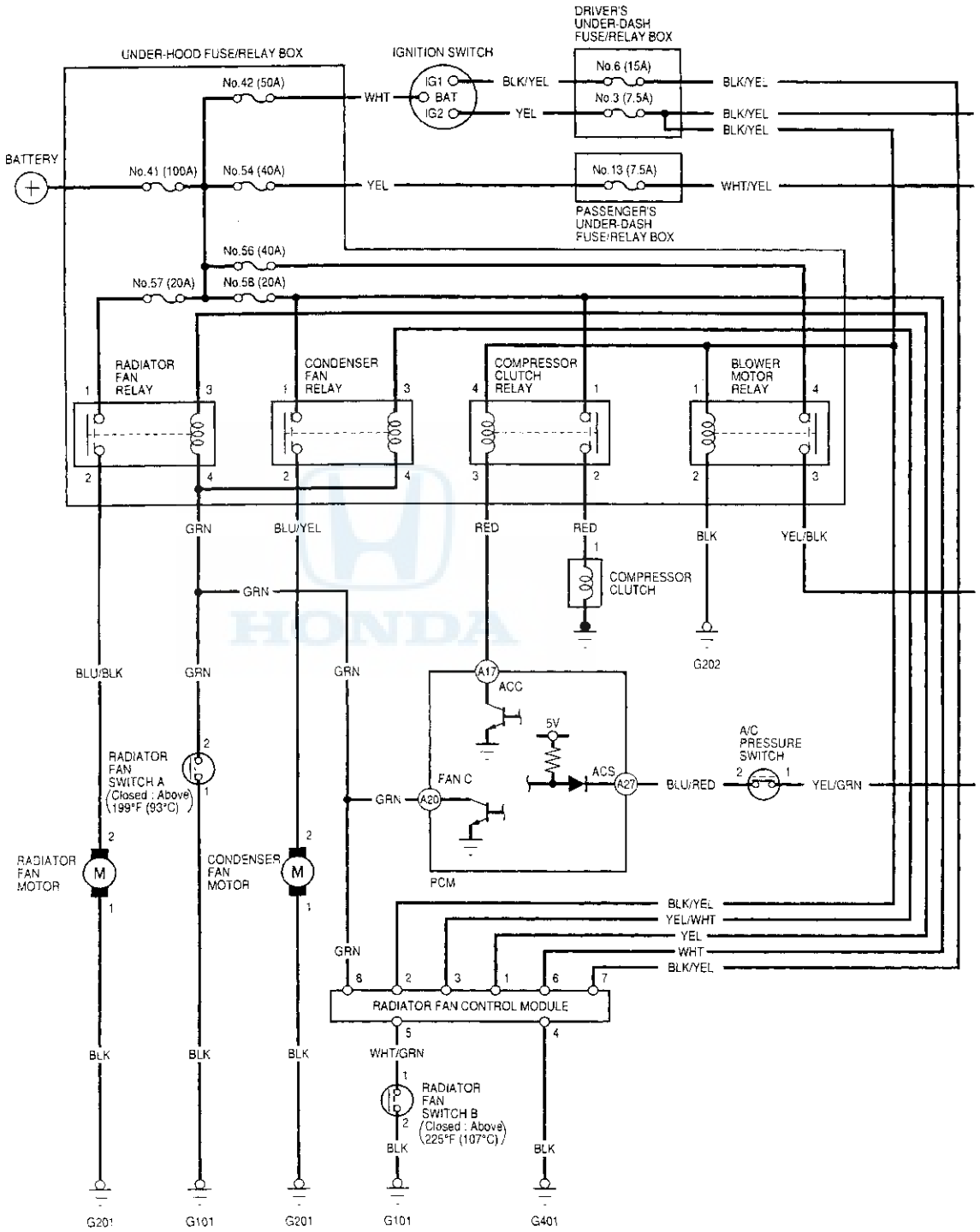

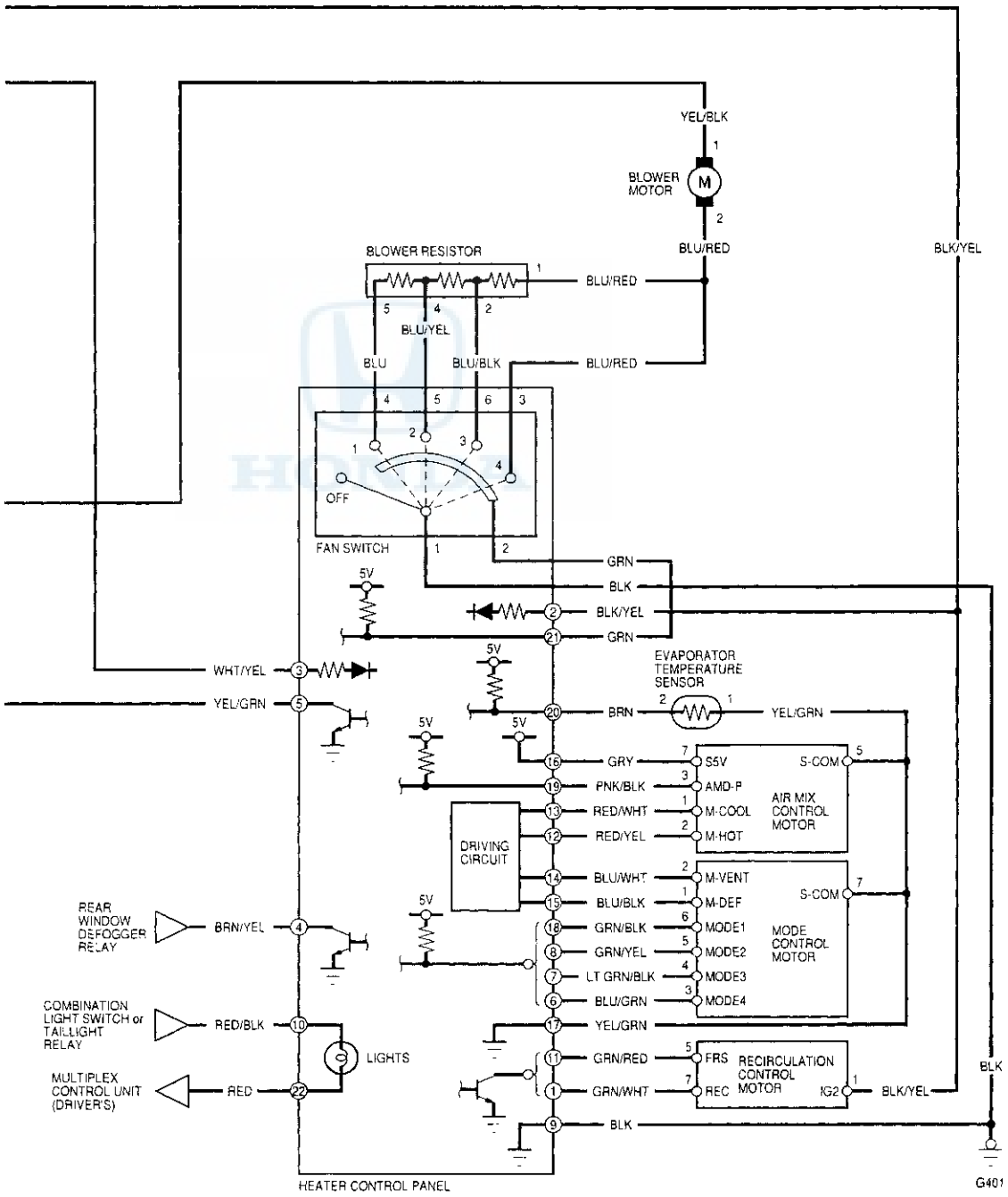
YEL/BLK
BLOWER MOTOR
M
BLU/RED
BLK/YEL
BLOWER RESISTOR
BLU/RED
BLU/YEL
BLU
BLU/BLK
BLU/RED
OFF
FAN SWITCH
GRN
BLK
BLK/YEL
GRN
5V
WHT/YEL
YEL/GRN
EVAPORATOR TEMPERATURE SENSOR
BRN
YEL/GRN
GRY
S5V
S-COM
PNK/BLK
AMD-P
RED/WHT
M-COOL
RED/YEL
M-HOT
AIR MIX CONTROL MOTOR
DRIVING CIRCUIT
BLU/WHT
M-VENT
BLU/BLK
M-DEF
GRN/BLK
MODE1
GRN/YEL
MODE2
LT GRN/BLK
MODE3
BLU/GRN
MODE4
MODE CONTROL MOTOR
REAR WINDOW DEFOGGER RELAY
BRN/YEL
COMBINATION LIGHT SWITCH or TAIL-LIGHT RELAY
RED/BLK
LIGHTS
MULTIPLEX CONTROL UNIT (DRIVER'S)
RED
YEL/GRN
GRN/RED
FRS
GRN/WHT
REC
RECIRCULATION CONTROL MOTOR
IG2
BLK/YEL
BLK
HEATER CONTROL PANEL
G401

Condenser Fan Circuit Troubleshooting

1. Check the No. 58 (20 A) fuse in the under-hood fuse/relay box, and the No. 3 (7.5 A) fuse in the driver's under-dash fuse/relay box.

   Are the fuses OK?

   YES—Go to step 2.

   NO—Replace the fuse(s), and recheck. ■

2. Remove the condenser fan relay from the under-hood fuse/relay box, and test it, refer to the '98-01 Accord Service Manual (see page 21-52).

   Is the relay OK?

   YES—Go to step 3.

   NO—Replace the condenser fan relay. ■

3. Measure the voltage between the No. 1 terminal of the condenser fan relay 4P socket and body ground.

   CONDENSER FAN RELAY 4P SOCKET

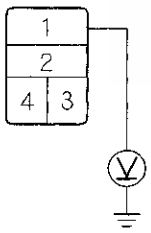

   Is there battery voltage?

   YES—Go to step 4.

   NO—Replace the under-hood fuse/relay box. ■

4. Connect the No. 1 and No. 2 terminals of the condenser fan relay 4P socket with a jumper wire.

   CONDENSER FAN RELAY 4P SOCKET

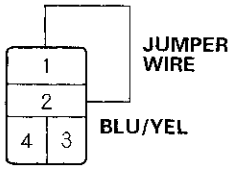

   Does the condenser fan run?

   YES—Go to step 5.

   NO—Go to step 9.

5. Disconnect the jumper wire.

6. Turn the ignition switch ON (II).

7. Measure the voltage between the No. 3 terminal of the condenser fan relay 4P socket and body ground.

   CONDENSER FAN RELAY 4P SOCKET

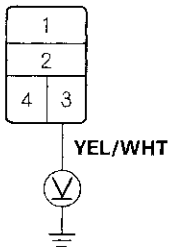

   Is there battery voltage?

   YES—Replace the under-hood fuse/relay box. ■

   NO—Go to step 8.

8. Measure the voltage between the No. 3 terminal of the radiator fan control module 8P connector and body ground with the 8P connector connected.

RADIATOR FAN CONTROL MODULE 8P CONNECTOR

Wire side of female terminals

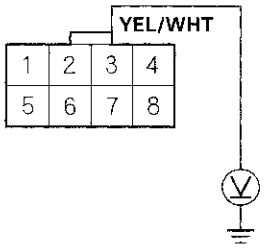

Is there battery voltage?

YES—Repair open in the wire between the condenser fan relay and the radiator fan control module.■

NO—Perform the radiator fan control module input tests (see page 10-20).■

9. Disconnect the jumper wire.

10. Disconnect the condenser fan 2P connector.

11. Check for continuity between the No. 2 terminal of the condenser fan relay 4P socket and the No. 2 terminal of the condenser fan 2P connector.

CONDENSER FAN RELAY 4P SOCKET

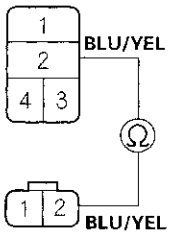

CONDENSER FAN 2P CONNECTOR
Wire side of female terminals

Is there continuity?

YES—Go to step 12.

NO—Repair open in the wire between the condenser fan relay and the condenser fan.■

12. Check for continuity between the No. 1 terminal of the condenser fan 2P connector and body ground.

CONDENSER FAN 2P CONNECTOR

Wire side of female terminals

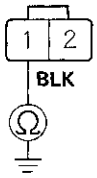

Is there continuity?

YES—Replace the condenser fan motor.■

NO—Check for an open in the wire between the condenser fan and body ground. If the wire is OK, check for poor ground at G201.■

Radiator and Condenser Fans Common Circuit Troubleshooting

1. Check the No. 57 (20 A) and No. 58 (20 A) fuses in the under-hood fuse/relay box, and the No. 3 (7.5 A) fuse in the driver's under-dash fuse/relay box.

   Are the fuses OK?

   YES—Go to step 2.

   NO—Replace the fuse(s), and recheck.■

2. Remove the condenser fan relay from the under-hood fuse/relay box.

3. Turn the ignition switch ON (II).

4. Measure the voltage between the No. 3 terminal of the condenser fan relay 4P socket and body ground.

CONDENSER FAN RELAY 4P SOCKET

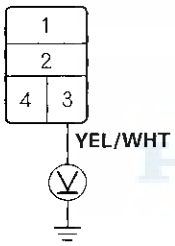

   Is there battery voltage?

   YES—Go to step 5.

   NO—Perform the radiator fan control module input tests (see page 10-20).■

5. Turn the ignition switch OFF.

6. Reinstall the condenser fan relay.

7. Make sure the A/C switch is OFF.

8. Turn the ignition switch ON (II).

9. Using a Backprobe Set, measure the voltage between the No. 20 terminal of the PCM connector A (32P) and body ground with the PCM connectors connected.

PCM CONNECTOR A (32P)

Wire side of female terminals

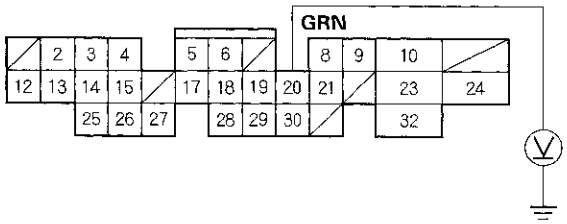

   Is there battery voltage?

   YES—Check for loose wires or poor connections at the PCM connector A(32P). If the connections are good, substitute a known-good PCM, and recheck. If the symptom/indication goes away, replace the original PCM.■

   NO—Repair open in the wire between the radiator fan relay, the condenser fan relay and PCM.■

Heater Valve Cable Adjustment

1. From under the hood, open the cable clamp (A), then disconnect the heater valve cable (B) from the heater valve arm (C).

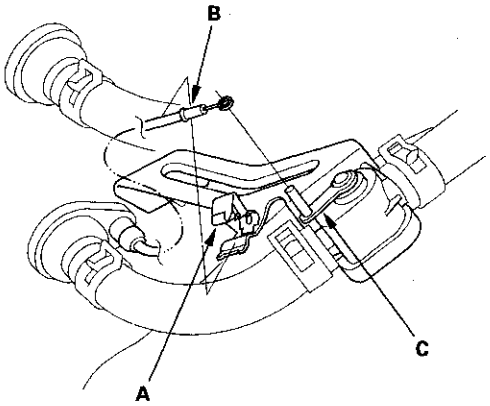

2. From under the dash, disconnect the heater valve cable housing from the cable clamp (A), and disconnect the heater valve cable (B) from the air mix control linkage (C).

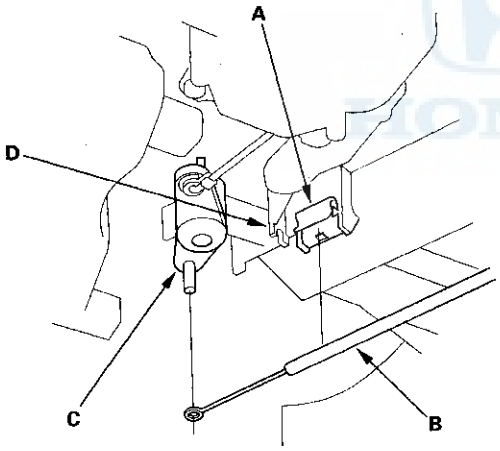

3. Set the temperature control dial on MAX COOL (60°F or 18°C) with the ignition switch ON (II).

4. Attach the heater valve cable (B) to the air mix control linkage (C) as shown above. Hold the end of the heater valve cable housing against the stop (D), then snap the heater valve cable housing into the cable clamp (A).

5. From under the hood, turn the heater valve arm (C) to the fully closed position as shown, and hold it. Attach the heater valve cable (B) to the heater valve arm, and gently pull on the heater valve cable housing to take up any slack, then install the heater valve cable housing into the cable clamp (A).

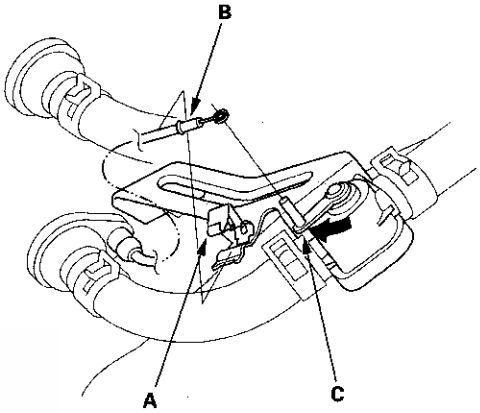

Compressor Replacement ('98-00 model)

1. If the compressor is marginally operable, run the engine at idle speed, and let the air conditioning work for a few minutes, then shut the engine off.

2. Make sure you have the anti-theft code for the radio, then write down the frequencies for the radio's preset buttons.

3. Disconnect the negative cable from the battery.

4. Recover the refrigerant with a recovery/recycling/charging station, refer to the '98-01 Accord Service Manual (see page 21-54).

5. Remove the alternator (see page 4-31).

6. Remove the compressor clutch connector (A) from the condenser fan shroud (B), then disconnect the compressor clutch connector. Disconnect the condenser fan connector (C), then remove the wire harness clips (D) from the condenser fan shroud. Remove the cruise control actuator cable (E) from the clamp. Loosen the lower mounting bolt, then remove the upper mounting bolts and the condenser fan shroud. Be careful not to damage the radiator fins when removing the condenser fan shroud.

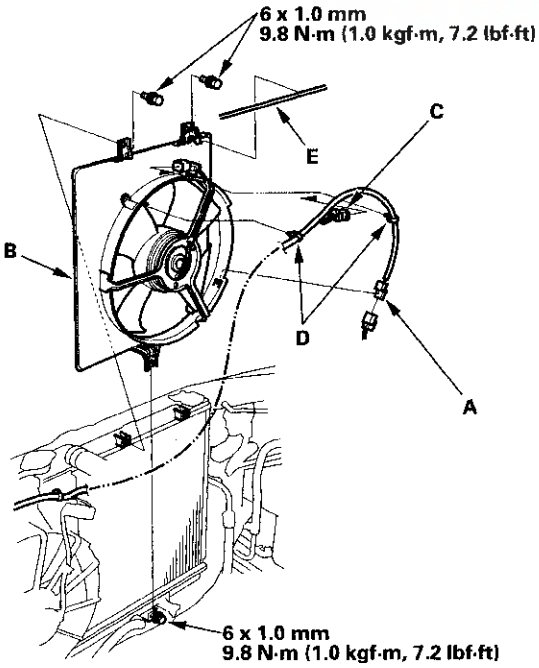

7. Remove the bolt and the nut, then disconnect the suction (A) and discharge (B) lines from the compressor. Plug or cap the lines immediately after disconnecting them to avoid moisture and dust contamination.

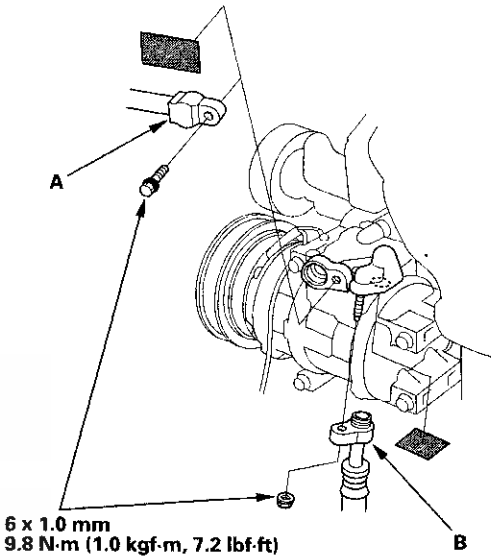

8. Remove the mounting bolts and the compressor. Be careful not to damage the radiator fins when removing the compressor.

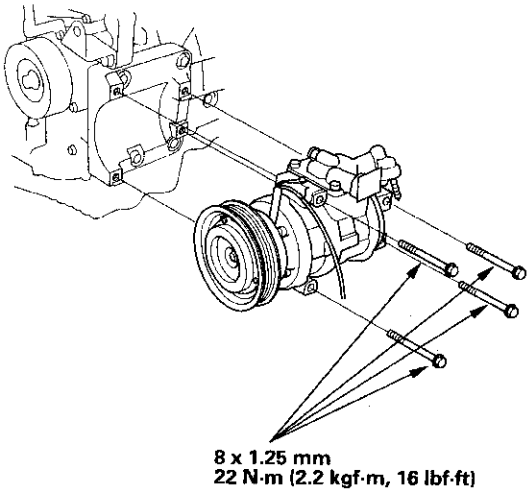

9. Remove the bolts, the suction service valve (A) and the O-ring (B) from the compressor.

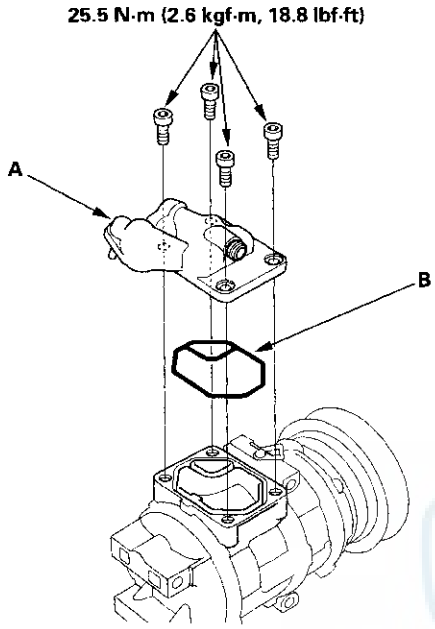

10. If necessary, remove the mounting bolts and the compressor bracket.

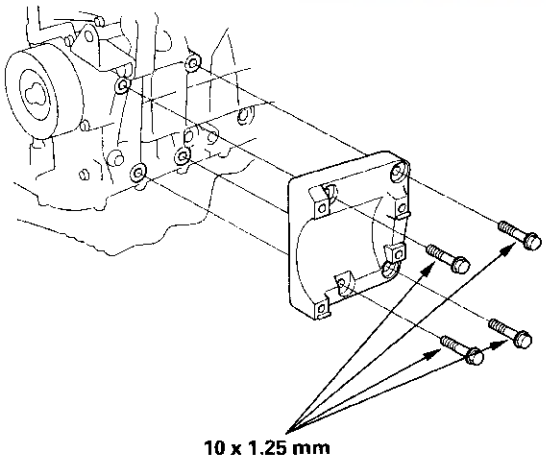

11. Install the compressor in the reverse order of removal, and note these items:

- If you're installing a new compressor, you must calculate the amount of refrigerant oil to be removed from it, refer to the '98-01 Accord Service Manual (see page 21-32).
- Replace the O-rings with new ones at each fitting, and apply a thin coat of refrigerant oil before installing them. Be sure to use the right O-rings for HFC-134a (R-134a) to avoid leakage.
- Use refrigerant oil (DENSO ND-OIL 8) for HFC-134a DENSO piston type compressor only.
- To avoid contamination, do not return the oil to the container once dispensed, and never mix it with other refrigerant oils.
- Immediately after using the oil, replace the cap on the container, and seal it to avoid moisture absorption.
- Do not spill the refrigerant oil on the vehicle; it may damage the paint; if the refrigerant oil contacts the paint, wash it off immediately.
- Be careful not to damage the radiator fins when installing the compressor and the condenser fan shroud.
- Evacuate the system, refer to the '98-01 Accord Service Manual (see page 21-55).
- Charge the system, refer to the '98-01 Accord Service Manual (see page 21-56), and test its performance, refer to the '98-01 Accord Service Manual (see page 21-44).
- Enter the anti-theft code for the radio, then enter the customer's radio station presets.

Compressor Clutch Check ('98-00 model)

1. Check the plated parts of the pressure plate for color changes, peeling or other damage. If there is damage, replace the clutch set (see page 21-17).

2. Check the pulley bearing play and drag by rotating the pulley by hand. Replace the clutch set with a new one if it is noisy or has excessive play/drag (see page 21-17).

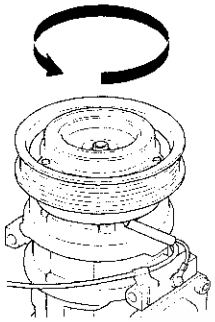

3. Measure the clearance betweenn the pulley (A) and the pressure plate (B) with a dial indicator. Zero out the indicator, then apply battery voltage to the compressor clutch. Measure the movement of the pressure plate when the voltage is applied. If the clearance is not within the specified limits, the pressure plate must be reshimed (see page 21-17).

   Clearance: 0.5 ± 0.15 mm (0.020 ± 0.006 in)

   NOTE: The shims are available in three thicknesses: 0.1 mm, 0.3 mm and 0.5 mm.

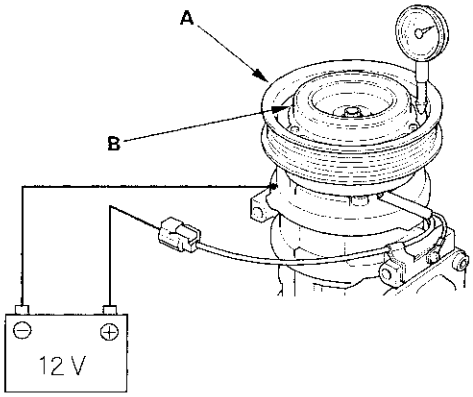

4. Check resistance of the field coil. If resistance is not within specifications, replace the field coil (see page 21-17).

   Field Coil Resistance: 3.4 – 3.8 ohms at 68°F (20°C)

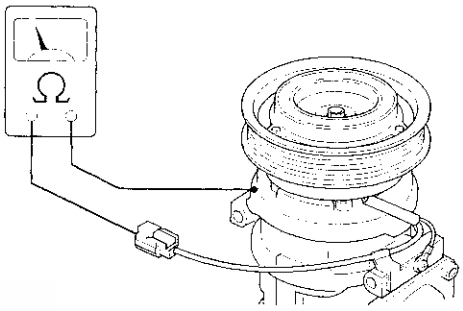

Compressor Clutch Overhaul ('98-00 model)

Special Tool Required
A/C clutch holder, Robinair 10204, Kent-Moore J37872, or Honda Tool and Equipment KMT-J33939, commercially available

1. Remove the center bolt while holding the pressure plate with a commercially available A/C clutch holder.

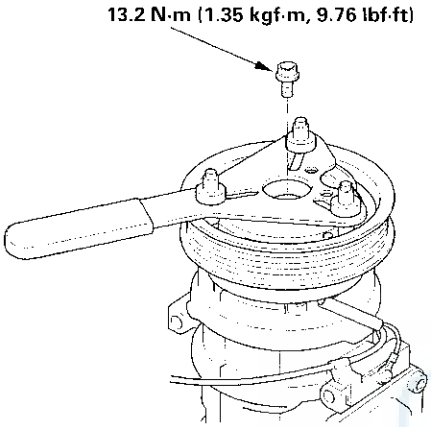

2. Remove the pressure plate (A) and shim(s) (B), taking care not to lose the shim(s). If the clutch needs adjustment, increase or decrease the number and thickness of shims as nesessary, then reinstall the pressure plate, and recheck its clearance (see page 21-16).

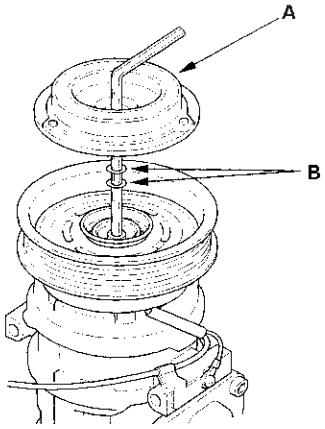

3. If you are replacing the field coil, remove the snap ring (A) with snap ring pliers, then remove the pulley (B). Be careful not to damage the pulley and compressor.

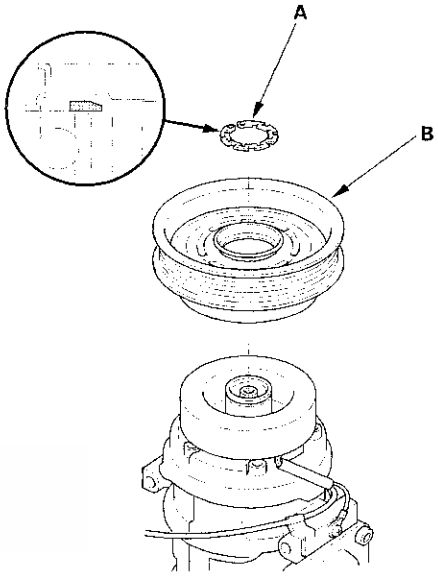

4. Remove the screw from the field coil ground terminal (A). Remove the snap ring (B) with snap ring pliers, then remove the field coil (C). Be careful not to damage the field coil and compressor.

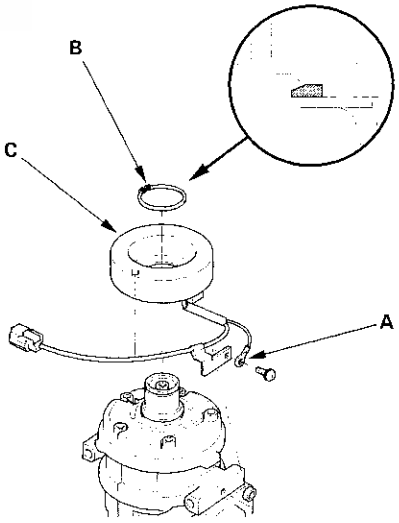

(cont'd)

Compressor Clutch Overhaul ('98-00 model) (cont'd)

5. Reassemble the clutch in the reverse order of disassembly, and note these items:
   - Install the field coil with the wire side facing down, and align the boss on the field coil with the hole in the compressor.
   - Clean the pulley and compressor sliding surfaces with contact cleaner or other non-petroleum solvent.
   - Install new snap rings, note the installation direction, and make sure they are fully seated in the groove.
   - Make sure that the pulley turns smoothly after it's reassembled.
   - Route and clamp the wires properly or they can be damaged by the pulley.

Compressor Relief Valve Replacement ('98-00 model)

1. Recover the refrigerant with a recovery/recycling/charging station, refer to the '98-01 Accord Service Manual (see page 21-54).

2. Remove the relief valve (A) and the O-ring (B). Plug the opening to keep foreign matter from entering the system and the compressor oil from running out.

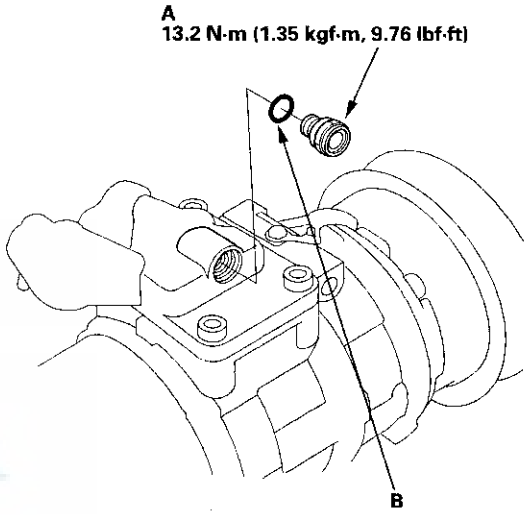

3. Clean the mating surfaces.

4. Replace the O-ring with a new one at the relief valve, and apply a thin coat of refrigerant oil before installing it.

5. Remove the plug, and install and tighten the relief valve.

6. Evacuate the system, refer to the '98-01 Accord Service Manual (see page 21-55).

7. Charge the system, refer to the '98-01 Accord Service Manual (see page 21-56), and test its performance, refer to the '98-01 Accord Service Manual (see page 21-44).

Compressor Replacement ('01 model)

1. If the compressor is marginally operable, run the engine at idle speed, and let the air conditioning work for a few minutes, then shut the engine off.

2. Make sure you have the anti-theft code for the radio, then write down the frequencies for the radio's preset buttons.

3. Disconnect the negative cable from the battery.

4. Recover the refrigerant with a recovery/recycling/charging station, refer to '98-01 Accord Service Manual (see page 21-54).

5. Remove the alternator (see page 4-24).

6. Remove the compressor clutch connector (A) from the condenser fan shroud (B), then disconnect the compressor clutch connector. Disconnect the condenser fan connector (C), then remove the wire harness clips (D) from the condenser fan shroud. Remove the cruise control actuator cable (E) from the clamp. Loosen the lower mounting bolt, then remove the upper mounting bolts and the condenser fan shroud. Be careful not to damage the radiator fins when removing the condenser fan shroud.

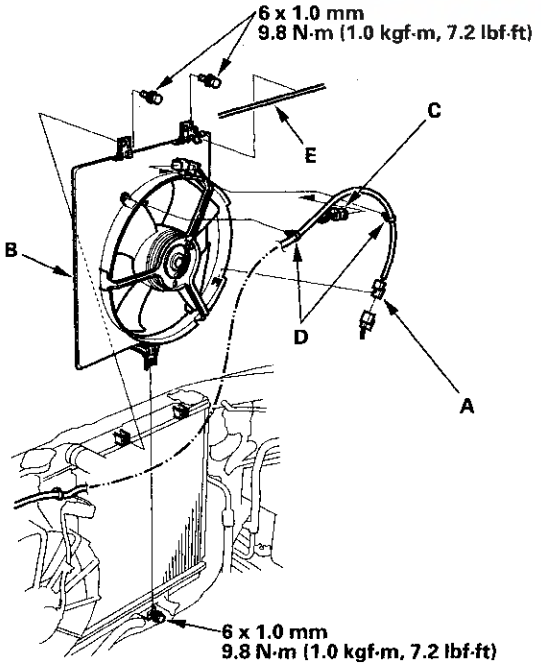

7. Remove the bolt and the nut, then disconnect the suction line (A) and discharge line (B) from the compressor. Plug or cap the lines immediately after disconnecting them to avoid moisture and dust contamination.

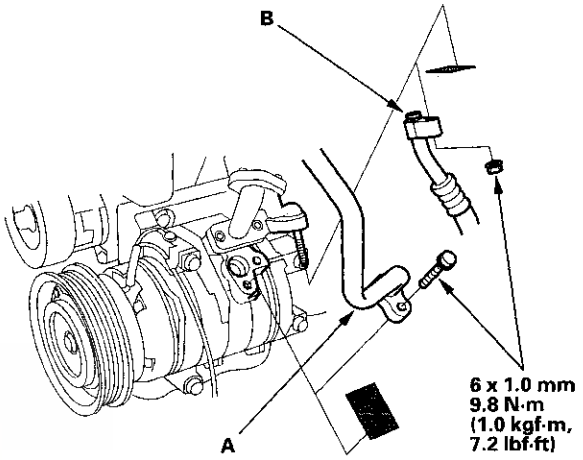

8. Remove the mounting bolts and the compressor. Be careful not to damage the radiator fins when removing the compressor.

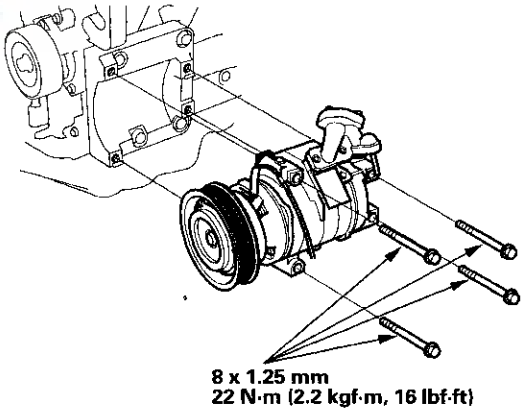

(cont'd)

Compressor Replacement ('01 model) (cont'd)

9. If necessary, remove the mounting bolts and the compressor brecket.

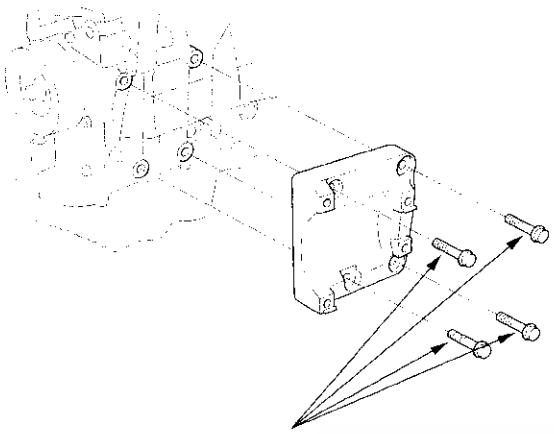

10 x 1.25 mm
44 N·m (4.5 kgf·m, 33 lbf·ft)

10. Install the compressor in the reverse order of removal, and note these items:

- If you're installing a new compressor, you must calculate the amount of refrigerant oil to be removed from it, refer to '98-01 Accord Service Manual (see page 21-32).
- Replace the O-rings with new ones at each fitting, and apply a thin coat of refrigerant oil before installing them. Be sure to use the right O-rings for HFC-134a (R-134a) to avoid leakage.
- Use refrigerant oil (DENSO ND-OIL 8) for HFC-134a DENSO piston type compressor only.
- To avoid contamination, do not return the oil to the container once dispensed, and never mix it with other refrigerant oils.
- Immediately after using the oil, replace the cap on the container, and seal it to avoid moisture absorption.
- Do not spill the refrigerant oil on the vehicle; it may damage the paint; if the refrigerant oil contacts the paint, wash it off immediately.
- Be careful not to damage the radiator fins when installing the compressor and the condenser fan shroud.
- Evacuate the system, refer to '98-01 Accord Service Manual (see page 21-55).
- Charge the system, refer to '98-01 Accord Service Manual (see page 21-56), and test its performance, refer to '98-01 Accord Service Manual (see page 21-44).
- Enter the anti-theft code for the radio, then enter the customer's radio station presets.

Compressor Clutch Check ('01 model)

1. Check the plated parts of the pressure plate for color changes, peeling or other damage. If there is damage, replace the clutch set (see page 21-22).

2. Check the pulley bearing play and drag by rotating the pulley by hand. Replace the clutch set with a new one if it is noisy or has excessive play/drag (see page 21-22).

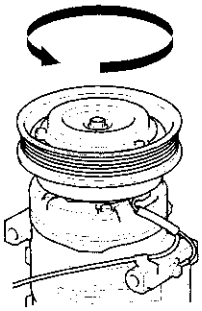

3. Measure the clearance between the pulley (A) and the pressure plate (B) with a dial indicator. Zero out the indicator, then apply battery voltage to the compressor clutch. Measure the movement of the pressure plate when the voltage is applied. If the clearance is not within the specified limits, the pressure plate must be reshimed (see page 21-22).

   Clearance: 0.5±0.15 mm (0.020±0.006 in.)

   NOTE: The shims are available in three thicknesses: 0.1 mm, 0.3 mm and 0.5 mm.

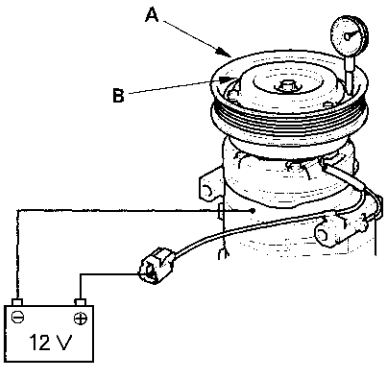

4. Check resistance of the field coil. If resistance is not within specifications, replace the field coil (see page 21-22).

   Field Coil Resistance: 3.4–3.8 ohms at 68°F (20°C)

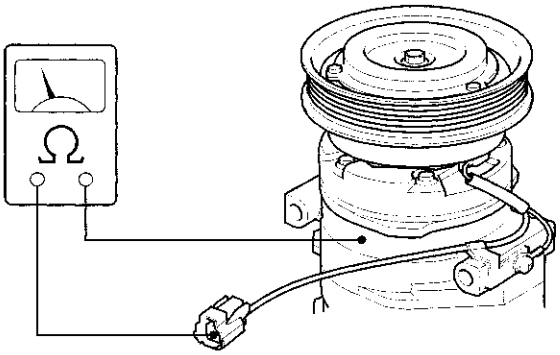

Compressor Clutch Overhaul ('01 model)

Special Tool Required
A/C clutch holder, Robinair 10204, Kent-Moore J37872, or Honda Tool and Equipment KMT-J33939, commercially available

1. Remove the center bolt (A) while holding the pressure plate with a commercially available A/C clutch holder (B).

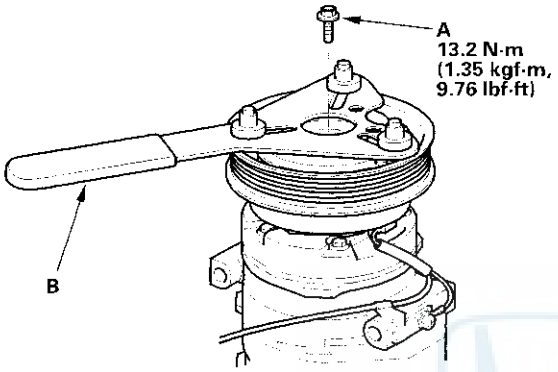

2. Remove the pressure plate (A) and shim(s) (B), taking care not to lose the shim(s). If the clutch needs adjustment, increase or decrease the number and thickness of shims as nesessary, then reinstall the pressure plate, and recheck its clearance (see page 21-21).

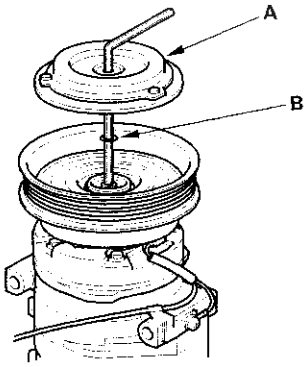

3. If you are replacing the field coil, remove the snap ring (A) with snap ring pliers, then remove the pulley (B). Be careful not to damage the pulley and compressor.

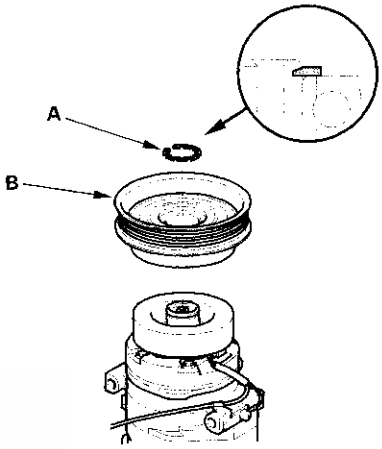

4. Remove the screw from the field coil ground terminal (A). Remove the snap ring (B) with snap ring pliers, then remove the field coil (C). Be careful not to damage the field coil and compressor.

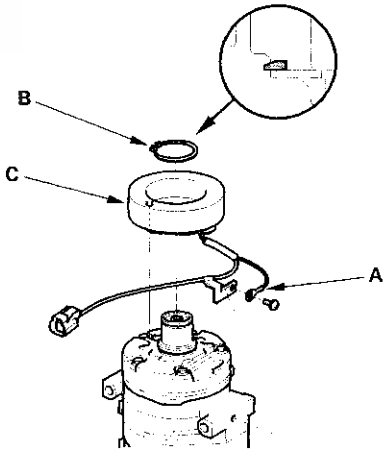

5. Reassemble the clutch in the reverse order of disassembly, and note these items:

   - Install the field coil with the wire side facing down, and align the boss on the field coil with the hole in the compressor.
   - Clean the pulley and compressor sliding surfaces with contact cleaner or other non-petroleum solvent.
   - Install new snap rings, note the installation direction, and make sure they are fully seated in the groove.
   - Make sure that the pulley turns smoothly after it's reassembled.
   - Route and clamp the wires properly or they can be damaged by the pulley.

Compressor Relief Valve Replacement ('01 model)

1. Recover the refrigerant with a recovery/recycling/charging station, refer to '98-01 Accord Service Manual (see page 21-54).

2. Remove the relief valve (A) and the O-ring (B). Plug the opening to keep foreign matter from entering the system and the compressor oil from running out.

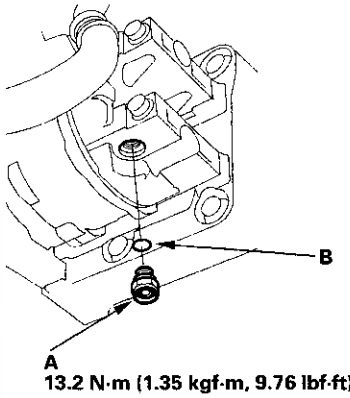

13.2 N·m (1.35 kgf·m, 9.76 lbf·ft)

3. Clean the mating surfaces.

4. Replace the O-ring with a new one at the relief valve, and apply a thin coat of refrigerant oil before installing it.

5. Remove the plug, and install and tighten the relief valve.

6. Evacuate the system, refer to '98-01 Accord Service Manual (see page 21-55).

7. Charge the system, refer to '98-01 Accord Service Manual (see page 21-56), and test its performance, refer to '98-01 Accord Service Manual (see page 21-44).

Condenser Replacement

1. Recover the refrigerant with a recovery/recycling/charging station, refer to the '98-01 Accord Service Manual (see page 21-54).

2. Remove the coolant reservoir, but do not disconnect the reservoir hose from the coolant reservoir and the radiator.

3. Remove the bolts, then remove the upper mount brackets from the radiator.

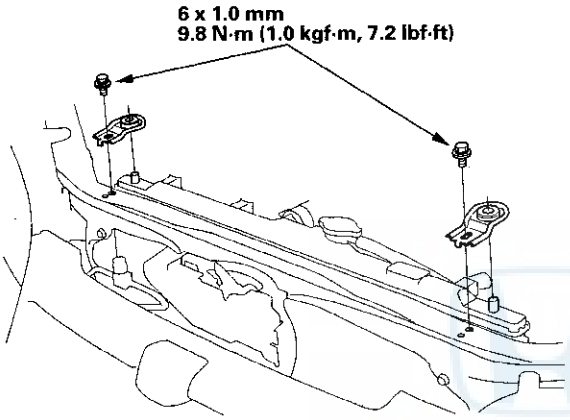

4. Remove each bolt, then disconnect the discharge line (A) and condenser (B) line from the condenser. Plug or cap the lines immediately after disconnecting them to avoid moisture and dust contamination.

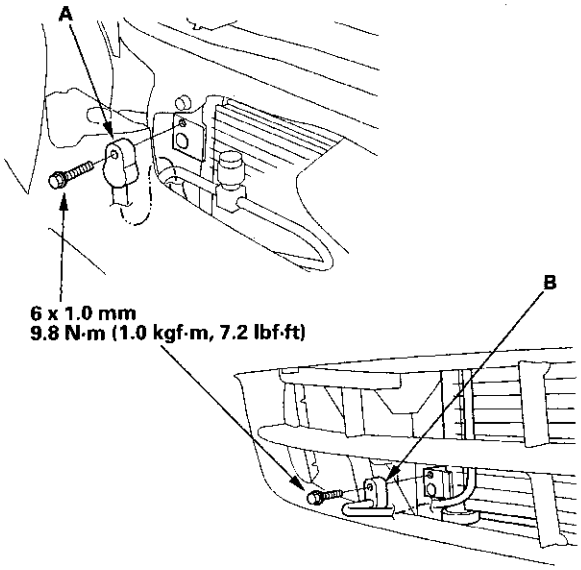

5. Remove the bolts and the upper mount brackets (A), then remove the condenser (B) by lifting it up. Be careful not to damage the radiator and condenser fins when removing the condenser.

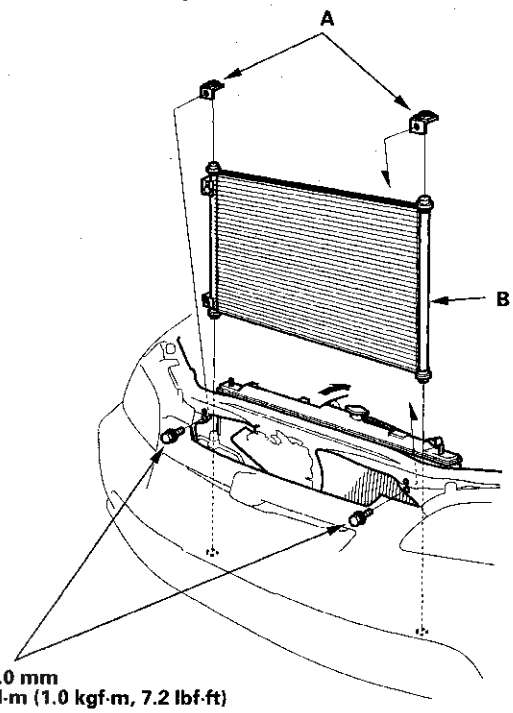

6. Install the condenser in the reverse order of removal, and note these items:

   - If you're installing a new condenser, add refrigerant oil (DENSO ND-OIL 8), refer to the '98-01 Accord Service Manual (see page 21-32).
   - Replace the O-rings with new ones at each fitting, and apply a thin coat of refrigerant oil before installing them. Be sure to use the right O-rings for HFC-134a (R-134a) to avoid leakage.
   - Immediately after using the oil, replace the cap on the container, and seal it to avoid moisture absorption.
   - Do not spill the refrigerant oil on the vehicle; it may damage the paint; if the refrigerant oil contacts the paint, wash it off immediately.
   - Be careful not to damage the radiator and condenser fins when installing the condenser.
   - Evacuate the system, refer to the '98-01 Accord Service Manual (see page 21-55).
   - Charge the system, refer to the '98-01 Accord Service Manual (see page 21-56), and test its performance, refer to the '98-01 Accord Service Manual (see page 21-44).

Component Location Index

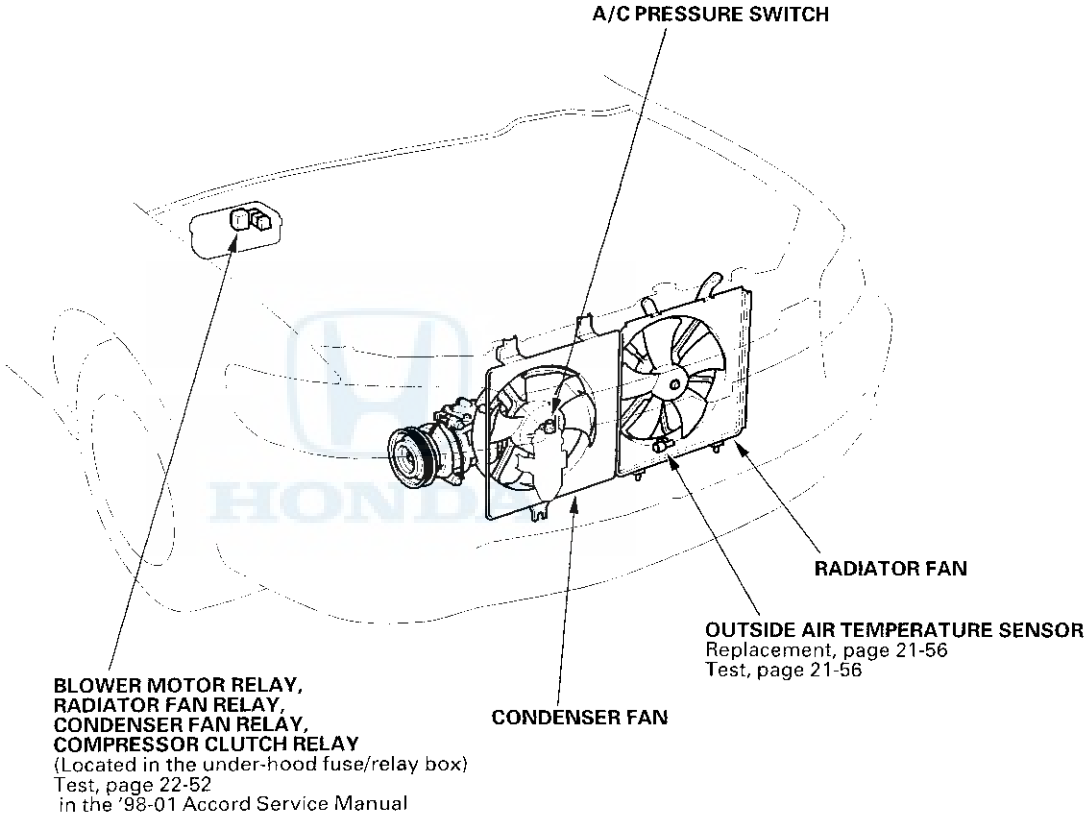

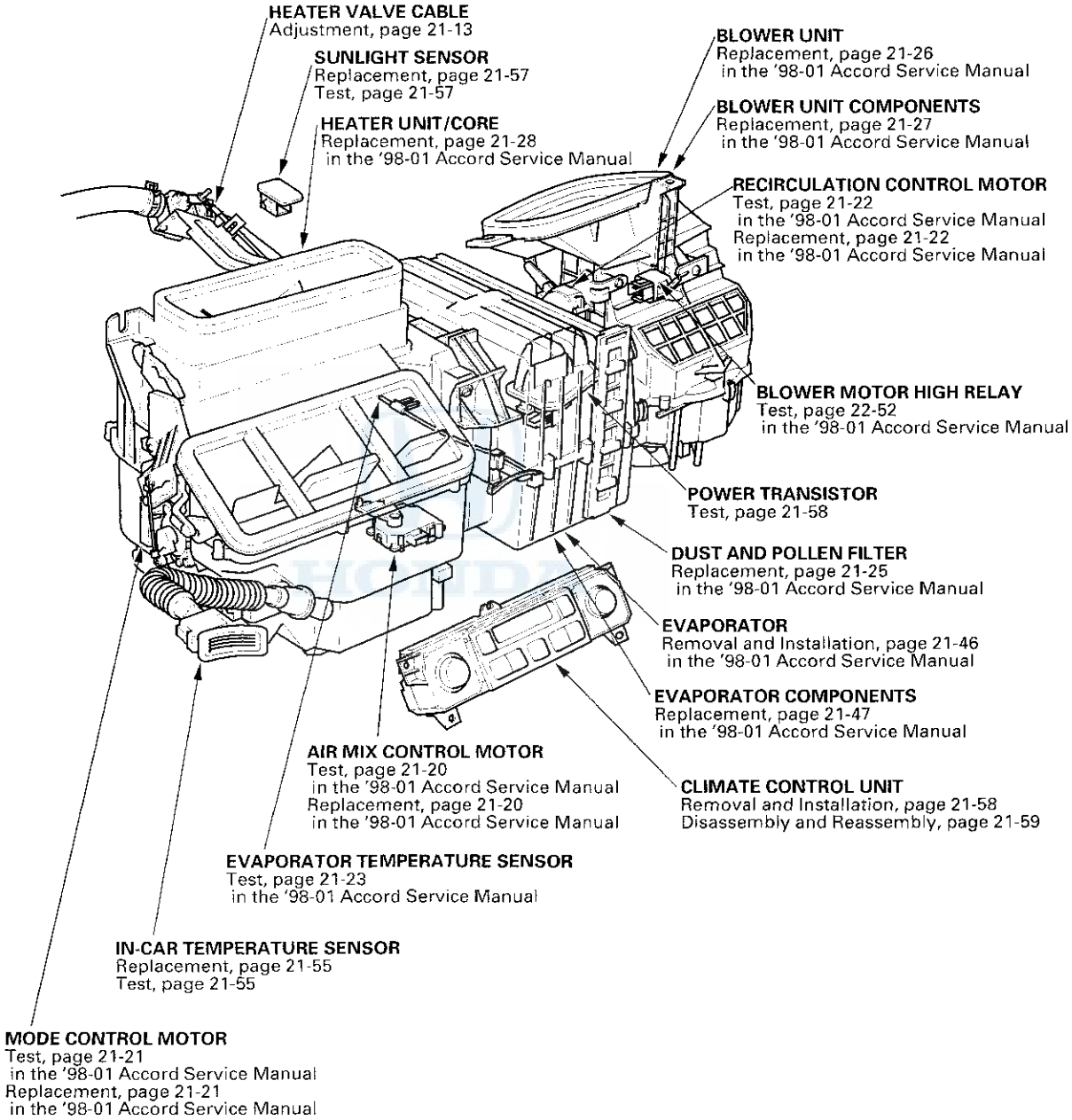
HEATER VALVE CABLE
Adjustment, page 21-13
SUNLIGHT SENSOR
Replacement, page 21-57
Test, page 21-57
HEATER UNIT/CORE
Replacement, page 21-28
in the '98-01 Accord Service Manual
BLOWER UNIT
Replacement, page 21-26
in the '98-01 Accord Service Manual
BLOWER UNIT COMPONENTS
Replacement, page 21-27
in the '98-01 Accord Service Manual
RECIRCULATION CONTROL MOTOR
Test, page 21-22
in the '98-01 Accord Service Manual
Replacement, page 21-22
in the '98-01 Accord Service Manual
BLOWER MOTOR HIGH RELAY
Test, page 22-52
in the '98-01 Accord Service Manual
POWER TRANSISTOR
Test, page 21-58
DUST AND POLLEN FILTER
Replacement, page 21-25
in the '98-01 Accord Service Manual
EVAPORATOR
Removal and Installation, page 21-46
in the '98-01 Accord Service Manual
EVAPORATOR COMPONENTS
Replacement, page 21-47
in the '98-01 Accord Service Manual
AIR MIX CONTROL MOTOR
Test, page 21-20
in the '98-01 Accord Service Manual
Replacement, page 21-20
in the '98-01 Accord Service Manual
CLIMATE CONTROL UNIT
Removal and Installation, page 21-58
Disassembly and Reassembly, page 21-59
EVAPORATOR TEMPERATURE SENSOR
Test, page 21-23
in the '98-01 Accord Service Manual
IN-CAR TEMPERATURE SENSOR
Replacement, page 21-55
Test, page 21-55
MODE CONTROL MOTOR
Test, page 21-21
in the '98-01 Accord Service Manual
Replacement, page 21-21
in the '98-01 Accord Service Manual

General Troubleshooting Information

How to Retrieve a DTC

The climate control unit has a self-diagnosis function.

Running the Self-diagnosis Function

1. Turn the ignition switch ON (II).

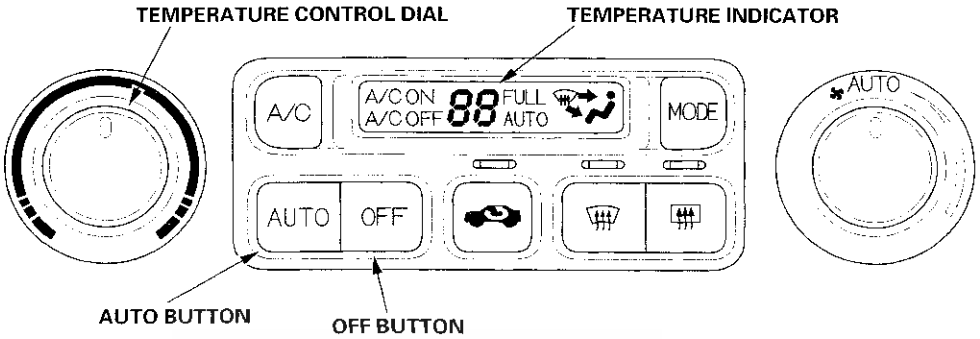

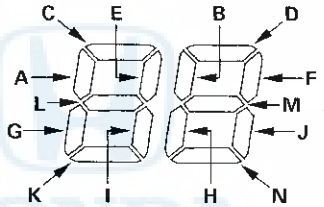

2. Set the temperature control dial on MAX COOL, then slowly to MAX HOT.

3. After 1 minute, press the AUTO button and then the OFF button. Continue to hold both buttons down. If there is any abnormality in the system when both buttons are pressed, the temperature indicator will light up the segment (A to N) corresponding to the error. The temperature indicator will then alternate every second between displaying "88" (all segments lit) and the error segment. If there is no abnormality, the segments will not light up.

Resetting the Self-diagnosis Function

Turning the ignition switch OFF will cancel the self-diagnosis function. After completing repair work, run the self-diagnosis function again to make sure that there are no other malfunctions.

DTC Troubleshooting Index

To retrieve the DTC, you must run the self-diagnosis function (see page 21-28). In the case of multiple problems, the respective indicator segments will come on. If indicator segments A, C, E, G, I, and L come on at the same time, there may be an open in the common ground wire of the sensors.

TEMPERATURE INDICATOR

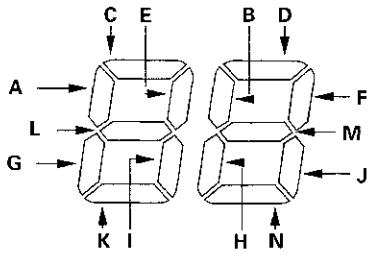

DTC (Temperature Indicator segment)	Detection Item	Page
A	An open in the in-car temperature sensor circuit	(see page 21-34)
B	A short in the in-car temperature sensor circuit	(see page 21-35)
C	An open in the outside air temperature sensor circuit	(see page 21-35)
D	A short in the outside air temperature sensor circuit	(see page 21-37)
E	An open in the sunlight sensor circuit	(see page 21-37)
F	A short in the sunlight sensor circuit	(see page 21-38)
G	An open in the evaporator temperature sensor circuit	(see page 21-39)
H	A short in the evaporator temperature sensor circuit	(see page 21-40)
I	An open in the air mix control motor circuit	(see page 21-41)
J	A short in the air mix control motor circuit	(see page 21-41)
K	A problem in the air mix control linkage, door, or motor	(see page 21-42)
L	An open or short in the mode control motor circuit	(see page 21-43)
M	A problem in the mode control linkage, doors, or motor	(see page 21-44)
N	A problem in the blower motor circuit	(see page 21-45)

Symptom Troubleshooting Index

Symptom	Diagnostic procedure	Also check for
The blower motor does not run immediately even through the engine is fully warmed up NOTE: The temperature control dial or button must be set between 64°F (18°C) and 90°F (32°C)	ECT Sensor Circuit Troubleshooting (see page 21-50)	• Cleanliness and tightness of all connectors
Recirculation control doors do not change between Fresh and Recirculate.	Recirculation Control Motor Circuit Troubleshooting (see page 21-52)	• Blown fuse No. 3 (7.5A) in the driver's under-dash fuse/relay box • Cleanliness and tightness of all connectors
Condenser fan does not run at all (but radiator fan runs with the A/C on).	Condenser Fan Circuit Troubleshooting (see page 21-10)	• Blown fuse No. 58 (20A) in the under-hood fuse/relay box, and No. 3 (7.5A) in the driver's under-dash fuse/relay box • Poor ground at G201 • Cleanliness and tightness of all connectors
Both fans do not run with the A/C on.	Radiator and Condenser Fans Common Circuit Troubleshooting (see page 21-12)	• Blown fuse No. 57 (20A) and No. 58 (20A) in the under-hood fuse/relay box, and No. 3 (7.5A) in the driver's under-dash fuse/relay box • Poor ground at G201 • Cleanliness and tightness of all connectors
Compressor clutch does not engage.	Compressor Clutch Circuit Troubleshooting, refer to the '98-01 Accord Service Manual (see page 21-39)	• Blown fuse No. 58 (20A) in the under-hood fuse/relay box, and No. 3 (7.5A) in the driver's under-dash fuse/relay box • Cleanliness and tightness of all connectors
A/C system does not come on (both fans and compressor).	A/C Pressure Switch Circuit Troubleshooting (see page 21-53)	Cleanliness and tightness of all connectors
Both heater and A/C do not work.	Climate Control Power and Ground Circuits Troubleshooting (see page 21-51)	• Blown fuse No. 54 (40A) in the under-hood fuse/relay box, No. 3 (7.5A) in the driver's under-dash fuse/relay box, and No. 13 (7.5A) in the passenger's under-dash fuse/relay box • Poor ground at G202 and G401 • Cleanliness and tightness of all connectors

System Description

Climate Control Unit Inputs and Outputs

CLIMATE CONTROL UNIT CONNECTORS

Wire side of female terminals

8P CONNECTOR

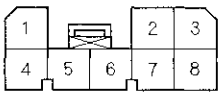

20P CONNECTOR

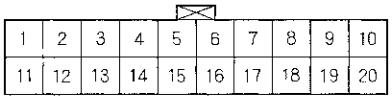

8P CONECTOR (□ on Circuit Diagram)

Cavity	Wire color	Signal	
1	BLK/YEL	IG2 (Power)	INPUT
2	WHT/YEL	+B (Power)	INPUT
3	RED/WHT	ENGINE COOLANT TEMPERATURE (ECT) SENSOR	OUTPUT
4	BLU/ORN	BLOWER MOTOR HIGH RELAY	INPUT
5	ORN/BLK	POWER TRANSISTOR	OUTPUT
6	BLU/RED	BLOWER FEEDBACK	INPUT
7	BRN/YEL	REAR WINDOW DEFOGGER RELAY	INPUT
8	BLK	GROUND	OUTPUT

20P CONECTOR (○ on Circuit Diagram)

Cavity	Wire color	Signal	
1	PNK/BLK	AIR MIX POTENTIAL	OUTPUT
2	YEL/GRN	A/C PRESSURE SWITCH	INPUT
3	GRN/RED	FRESH	INPUT
4	GRN/WHT	RECIRCULATE	INPUT
5	BLU/BLK	MODE DEF	OUTPUT
6	BLU/WHT	MODE VENT	OUTPUT
7	RED/YEL	AIR MIX HOT	OUTPUT
8	RED/BLK	COMBINATION LIGHT SWITCH or TAILLIGHT RELAY	INPUT
9	RED/WHT	AIR MIX COOL	OUTPUT
10	RED	MULTIPLEX CONTROL UNIT (DRIVER'S)	OUTPUT
11	YEL/GRN	SENSOR COMMON GROUND	INPUT
12	WHT/RED	SUNLIGHT SENSOR	OUTPUT
13	GRY	AIR MIX POTENTIAL +5V	OUTPUT
14	BRN	EVAPORATOR TEMPERATURE SENSOR	OUTPUT
15	BRN/WHT	OUTSIDE AIR TEMPERATURE SENSOR	OUTPUT
16	YEL/RED	IN-CAR TEMPERATURE SENSOR	OUTPUT
17	BLU/GRN	MODE 4	OUTPUT
18	LT GRN/BLK	MODE 3	OUTPUT
19	GRN/YEL	MODE 2	OUTPUT
20	GRN/BLK	MODE 1	OUTPUT

Circuit Diagram

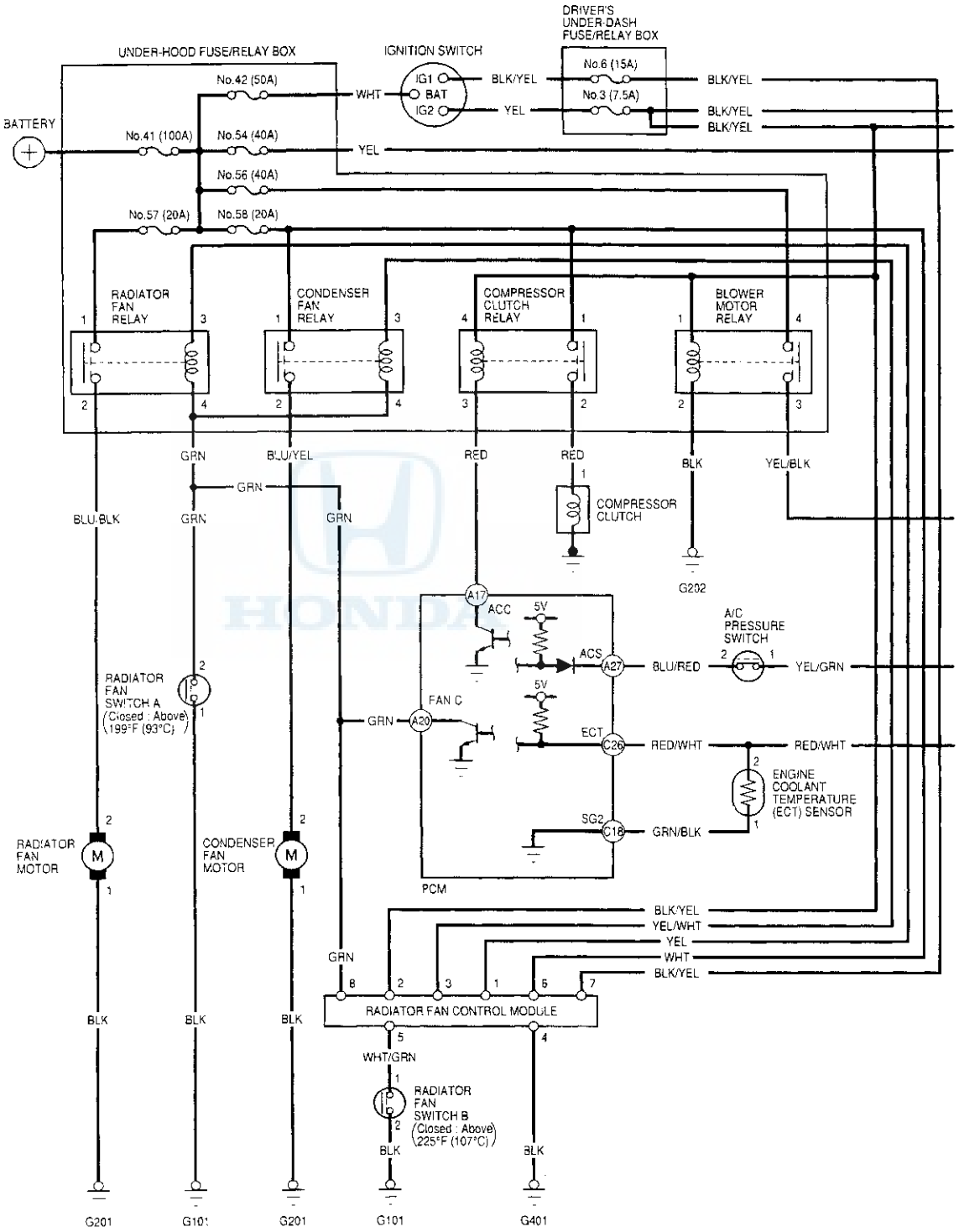

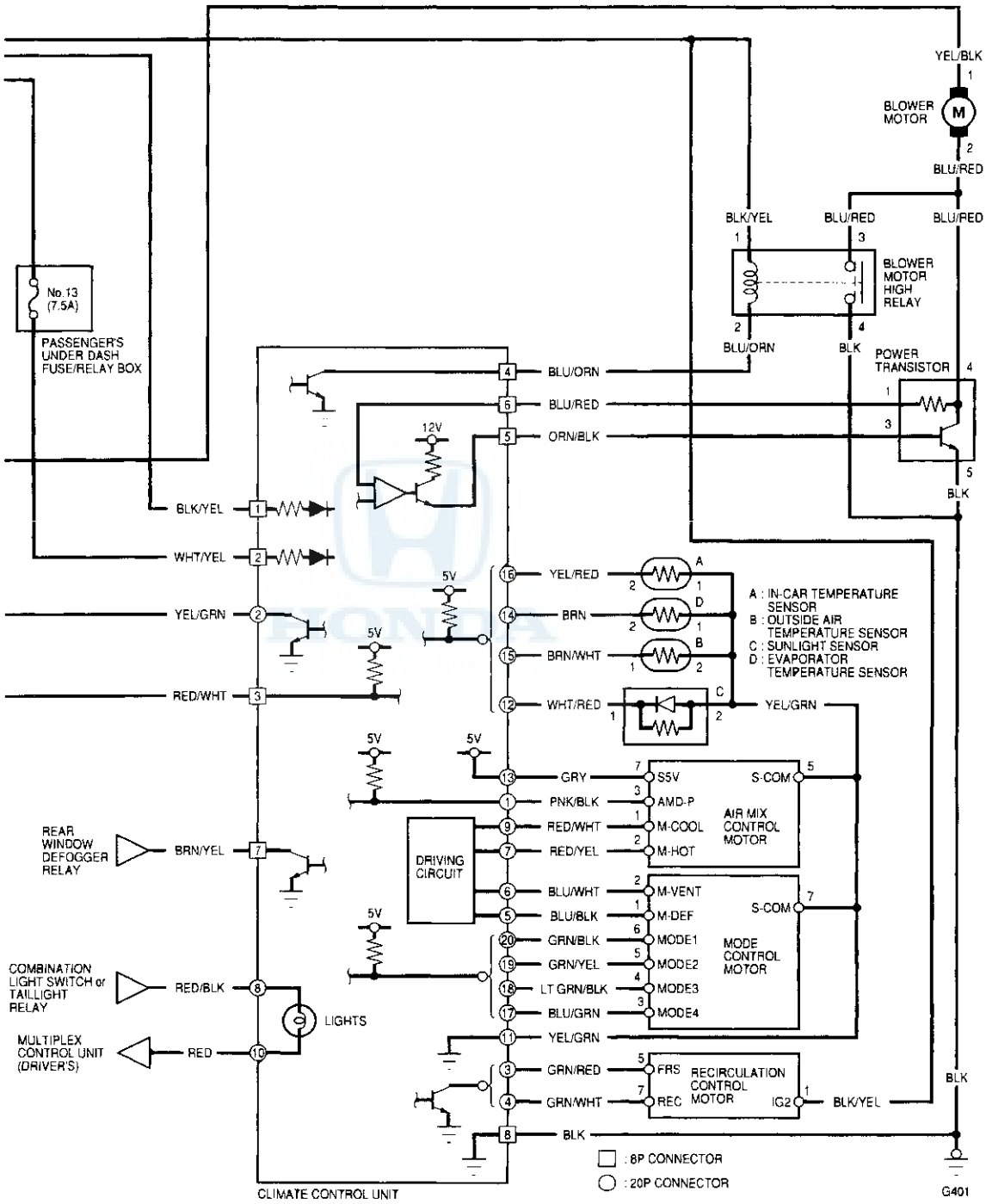
YEL/BLK
BLOWER MOTOR
BLU/RED
BLU/RED
BLU/RED
BLK/YEL
BLU/RED
BLOWER MOTOR HIGH RELAY
BLU/ORN
BLK
No.13 (7.5A)
PASSENGER'S UNDER DASH FUSE/RELAY BOX
BLU/ORN
BLU/RED
ORN/BLK
POWER TRANSISTOR
BLK
12V
BLK/YEL
WHT/YEL
YEL/GRN
RED/WHT
5V
YEL/RED
BRN
BRN/WHT
WHT/RED
A : IN-CAR TEMPERATURE SENSOR
B : OUTSIDE AIR TEMPERATURE SENSOR
C : SUNLIGHT SENSOR
D : EVAPORATOR TEMPERATURE SENSOR
YEL/GRN
GRY
PNK/BLK
RED/WHT
RED/YEL
S5V
AMD-P
M-COOL
M-HOT
S-COM
AIR MIX CONTROL MOTOR
REAR WINDOW DEFOGGER RELAY
BRN/YEL
DRIVING CIRCUIT
BLU/WHT
BLU/BLK
M-VENT
M-DEF
GRN/BLK
GRN/YEL
LT GRN/BLK
BLU/GRN
MODE1
MODE2
MODE3
MODE4
MODE CONTROL MOTOR
COMBINATION LIGHT SWITCH or TAILLIGHT RELAY
RED/BLK
LIGHTS
MULTIPLEX CONTROL UNIT (DRIVER'S)
RED
YEL/GRN
GRN/RED
GRN/WHT
FRS
REC
RECIRCULATION CONTROL MOTOR
IG2
BLK/YEL
BLK
BLK
: 8P CONNECTOR
: 20P CONNECTOR
CLIMATE CONTROL UNIT
G401

DTC Troubleshooting

DTC indicator light A: An open in the in-car temperature sensor circuit

1. Remove the in-car temperature sensor (see page 21-55).

2. Measure the resistance between the No. 1 and No. 2 terminals of the in-car temperature sensor.
   *Check for a change in resistance by heating or cooling the sensor with a hair drier.

IN-CAR TEMPERATURE SENSOR

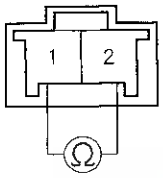

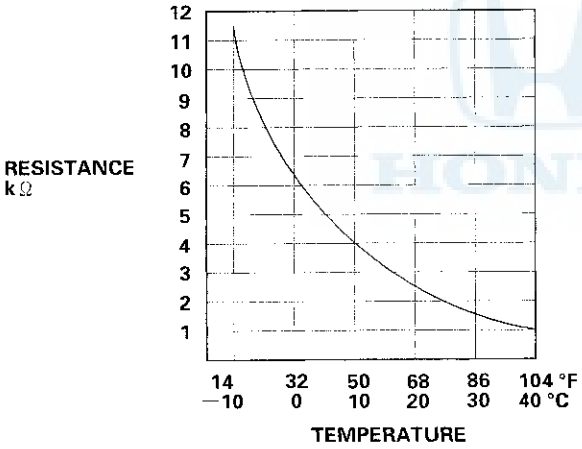

**Is the resistance within the specifications shown on the graph?*

YES – Go to step 3.

NO – Replace the in-car temperature sensor. ■

3. Disconnect the climate control unit 20P connector.

4. Check for continuity between the No. 16 terminal of the climate control unit 20P connector and the No. 2 terminal of the in-car temperature sensor 2P connector.

CLIMATE CONTROL UNIT 20P CONNECTOR
Wire side of female terminals

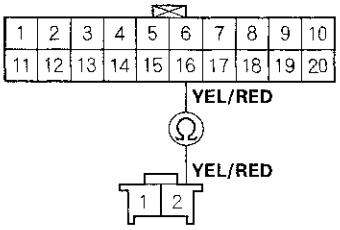

IN-CAR TEMPERATURE SENSOR 2P CONNECTOR
Wire side of female terminals

Is there continuity?

YES – Go to step 5.

NO – Repair open in the wire between the climate control unit and the in-car temperature sensor. ■

5. Check for continuity between the No. 11 terminal of the climate control unit 20P connector and the No. 1 terminal of the in-car temperature sensor 2P connector.

CLIMATE CONTROL UNIT 20P CONNECTOR
Wire side of female terminals

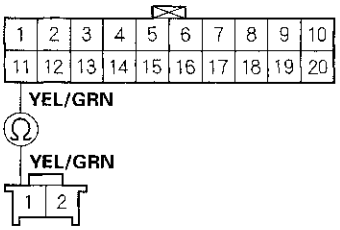

IN-CAR TEMPERATURE SENSOR 2P CONNECTOR
Wire side of female terminals

Is there continuity?

YES – Check for loose wires or poor connections at the climate control unit 20P connector and at the in-car temperature sensor 2P connector. If the connections are good, substitute a known-good climate control unit, and recheck. If the symptom/indication goes away, replace the original climate control unit. ■

NO – Repair open in the wire between the climate control unit and the in-car temperature sensor. ■

DTC indicator light B: A short in the in-car temperature sensor circuit

1. Remove the in-car temperature sensor (see page 21-55).

2. Test the in-car temperature sensor (see page 21-55).

   Is the resistance within the specifications shown on the graph?

   YES – Go to step 3.

   NO – Replace the in-car temperature sensor. ■

3. Disconnect the climate control unit 20P connector.

4. Check for continuity between the No. 16 terminal of the climate control unit 20P connector and body ground.

CLIMATE CONTROL UNIT 20P CONNECTOR

Wire side of female terminals

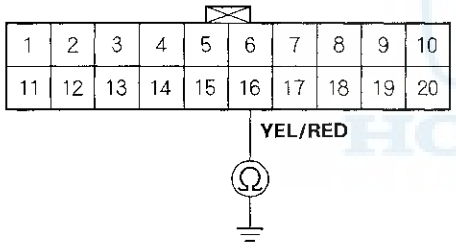

Is there continuity?

YES – Repair short to body ground in the wire between the climate control unit and the in-car temperature sensor. ■

NO – Substitute a known-good climate control unit, and recheck. If the symptom/indication goes away, replace the original climate control unit. ■

DTC indicator light C: An open in the outside air temperature sensor circuit

1. Remove the outside air temperature sensor (see page 21-56).

2. Measure the resistance between the No. 1 and No. 2 terminals of the outside air temperature sensor. *Dip the sensor in ice water the and measure the resistance. Then pour hot water on the sensor, and check for a change in resistance.

OUTSIDE AIR TEMPERATURE SENSOR

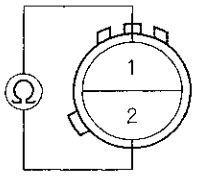

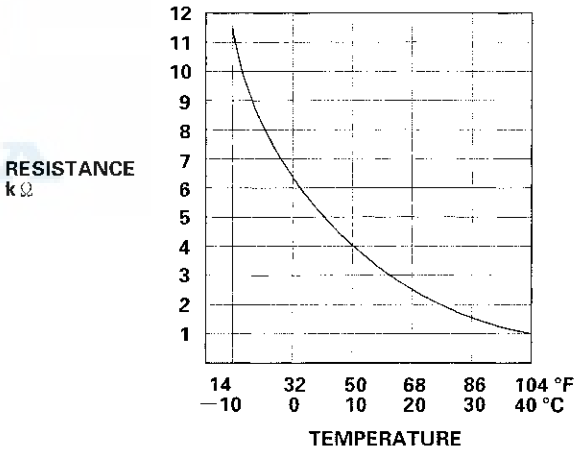

** Is the resistance within the specifications shown on the graph?*

YES – Go to step 3.

NO – Replace the outside air temperature sensor. ■

3. Disconnect the climate control unit 20P connector.

(cont'd)

DTC Troubleshooting (cont'd)

4. Check for continuity between the No. 15 terminal of the climate control unit 20P connector and the No. 1 terminal of the outside air temperature sensor 2P connector.

CLIMATE CONTROL UNIT 20P CONNECTOR

Wire side of female terminals

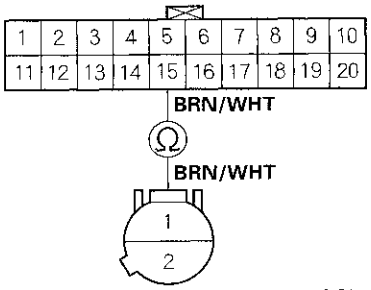

OUTSIDE AIR TEMPERATURE SENSOR 2P CONNECTOR

Wire side of female terminals

Is there continuity?

YES – Go to step 5.

NO – Repair open in the wire between the climate control unit and the outside air temperature sensor. ■

5. Check for continuity between the No. 11 terminal of the climate control unit 20P connector and the No. 2 terminal of the outside air temperature sensor 2P connector.

CLIMATE CONTROL UNIT 20P CONNECTOR

Wire side of female terminals

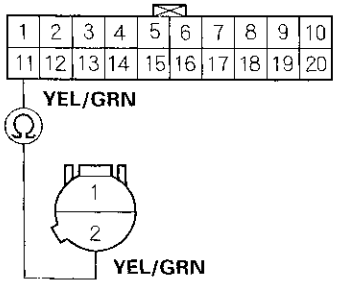

OUTSIDE AIR TEMPERATURE SENSOR 2P CONNECTOR

Wire side of female terminals

Is there continuity?

YES – Check for loose wires or poor connections at the climate control unit 20P connector and at the outside air temperature sensor 2P connector. If the connections are good, substitute a known-good climate control unit, and recheck. If the symptom/indication goes away, replace the original climate control unit. ■

NO – Repair open in the wire between the climate control unit and the outside air temperature sensor. ■

DTC indicator light D: A short in the outside air temperature sensor circuit

1. Remove the outside air temperature sensor (see page 21-56).

2. Test the outside air temperature sensor (see page 21-56).

   Is the resistance within the specifications shown on the graph?

   YES – Go to step 3.

   NO – Replace the outside air temperature sensor. ■

3. Disconnect the climate control unit 20P connector.

4. Check for continuity between the No. 15 terminal of the climate control unit 20P connector and body ground.

CLIMATE CONTROL UNIT 20P CONNECTOR
Wire side of female terminals

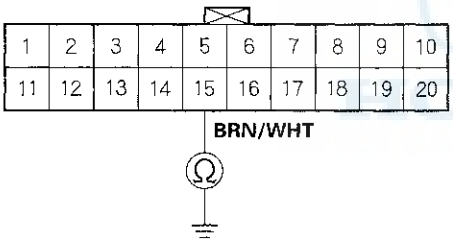

Is there continuity?

YES – Repair short to body ground in the wire between the climate control unit and the outside air temperature sensor. ■

NO – Substitute a known-good climate control unit, and recheck. If the symptom/indication goes away, replace the original climate control unit. ■

DTC indicator light E: An open in the sunlight sensor circuit

1. Disconnect the sunlight sensor 2P connector.

2. Disconnect the climate control unit 20P connector.

3. Check for continuity between the No. 12 terminal of the climate control unit 20P connector and the No. 1 terminal of the sunlight sensor 2P connector.

CLIMATE CONTROL UNIT 20P CONNECTOR
Wire side of female terminals

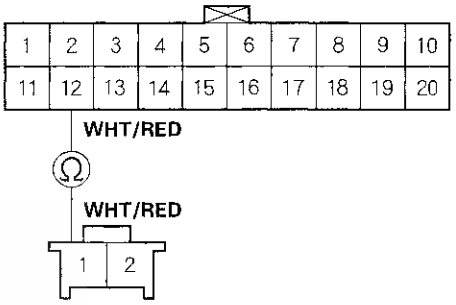

SUNLIGHT SENSOR 2P CONNECTOR
Wire side of female terminals

Is there continuity?

YES – Go to step 4.

NO – Repair open in the wire between the climate control unit and the sunlight sensor. ■

(cont'd)

DTC Troubleshooting (cont'd)

4. Check for continuity between the No. 11 terminal of the climate control unit 20P connector and the No. 2 terminal of the sunlight sensor 2P connector.

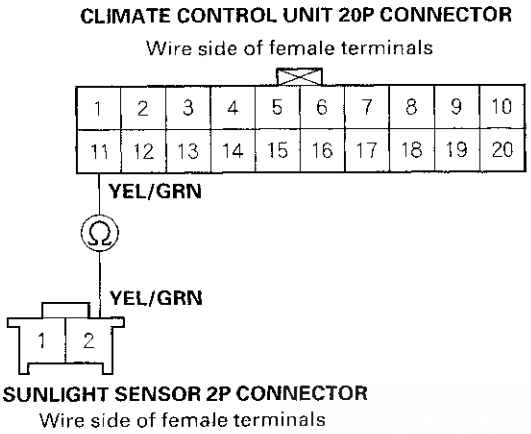

Is there continuity?

YES — Go to step 5.

NO — Repair open in the wire between the climate control unit and the outside air temperature sensor. ■

5. Reconnect the sunlight sensor 2P connector.

6. Reconnect the climate control unit 20P connector.

7. Test the sunlight sensor (see page 21-57).

Is the sunlight sensor OK?

YES — Check for loose wires or poor connections at the climate control unit 20P connector and at the sunlight sensor 2P connector. If the connections are good, substitute a known-good climate control unit, and recheck. If the symptom/indication goes away, replace the original climate control unit. ■

NO — Replace the sunlight sensor. ■

DTC indicator light F: A short in the sunlight sensor circuit

1. Disconnect the sunlight sensor 2P connector.

2. Disconnect the climate control unit 20P connector.

3. Check for continuity between the No. 12 terminal of the climate control unit 20P connector and body ground.

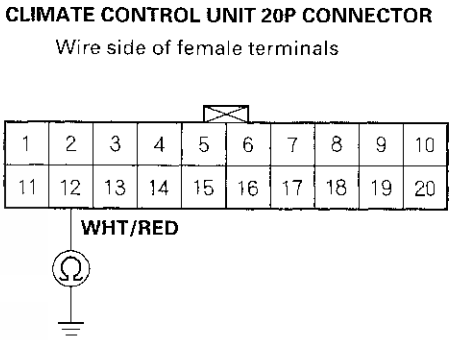

Is there continuity?

YES — Repair short to body ground in the wire between the climate control unit and the sunlight sensor. ■

NO — Go to step 4.

4. Reconnect the sunlight sensor 2P connector.

5. Reconnect the climate control unit 20P connector.

6. Test the sunlight sensor (see page 21-57).

Is the sunlight sensor OK?

YES — Substitute a known-good climate control unit, and recheck. If the symptom/indication goes away, replace the original climate control unit. ■

NO — Replace the sunlight sensor. ■

DTC indicator light G: An open in the evaporator temperature sensor circuit

1. Disconnect the evaporator temperature sensor 2P connector.

2. Measure the resistance between the No. 1 and No. 2 terminals of the evaporator temperature sensor.

EVAPORATOR TEMPERATURE SENSOR
Terminal side of male terminals

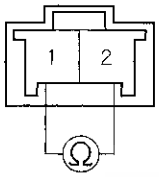

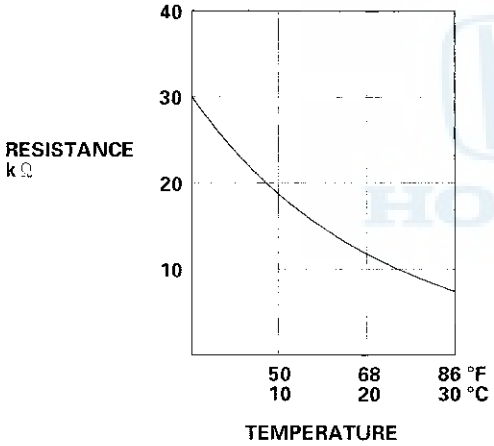

Is the resistance within the specifications shown on the graph?

YES — Go to step 3.

NO — Replace the evaporator temperature sensor. ■

3. Disconnect the climate control unit 20P connector.

4. Check for continuity between the No. 14 terminal of the climate control unit 20P connector and the No. 2 terminal of the evaporator temperature sensor 2P connector.

CLIMATE CONTROL UNIT 20P CONNECTOR
Wire side of female terminals

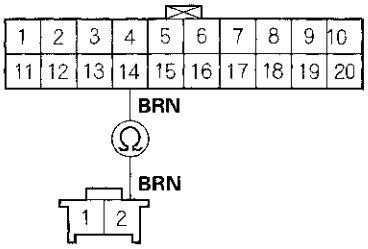

EVAPORATOR TEMPERATURE SENSOR 2P CONNECTOR
Wire side of female terminals

Is there continuity?

YES — Go to step 5.

NO — Repair open in the wire between the climate control unit and the evaporator temperature sensor. ■

(cont'd)

DTC Troubleshooting (cont'd)

5. Check for continuity between the No. 11 terminal of the climate control unit 20P connector and the No. 1 terminal of the evaporator temperature sensor 2P connector.

CLIMATE CONTROL UNIT 20P CONNECTOR
Wire side of female terminals

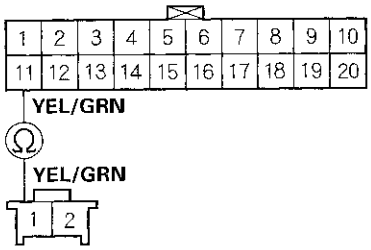

EVAPORATOR TEMPERATURE SENSOR 2P CONNECTOR
Wire side of female terminals

Is there continuity?

YES—Check for loose wires or poor connections at the climate control unit 20P connector and at the evaporator temperature sensor 2P connector. If the connections are good, substitute a known-good climate control unit, and recheck. If the symptom/indication goes away, replace the original climate control unit. ■

NO—Repair open in the wire between the climate control unit and the evaporator temperature sensor. ■

DTC indicator light H: A short in the evaporator temperature sensor circuit

1. Disconnect the evaporator temperature sensor 2P connector.

2. Test the evaporator temperature sensor (see step 2 on page 21-39).

   Is the resistance within the specifications shown on the graph?

   YES—Go to step 3.

   NO—Replace the evaporator temperature sensor. ■

3. Disconnect the climate control unit 20P connector.

4. Check for continuity between the No. 14 terminal of the climate control unit 20P connector and body ground.

CLIMATE CONTROL UNIT 20P CONNECTOR
Wire side of female terminals

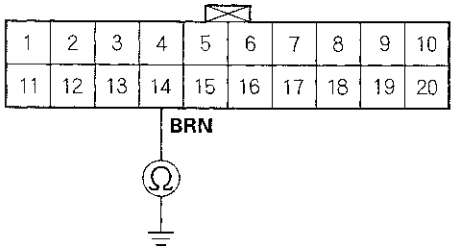

Is there continuity?

YES—Repair short to body ground in the wire between the climate control unit and the evaporator temperature sensor. ■

NO—Substitute a known-good climate control unit, and recheck. If the symptom/indication goes away, replace the original climate control unit. ■

DTC indicator light I: An open in the air mix control motor circuit

1. Disconnect the air mix control motor 7P connector.
2. Disconnect the climate control unit 20P connector.
3. Check for continuity between following terminals of the climate control unit 20P connector and the air mix control motor 7P connector.

20P:	7P:
No. 1	No. 3
No. 7	No. 2
No. 9	No. 1
No. 11	No. 5
No. 13	No. 7

CLIMATE CONTROL UNIT 20P CONNECTOR
Wire side of female terminals

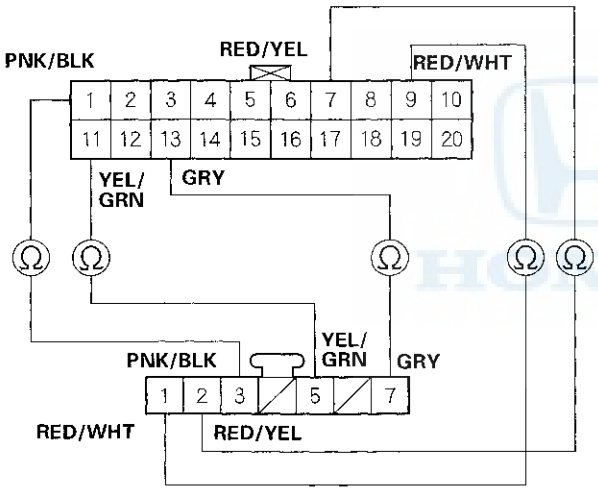

AIR MIX CONTROL MOTOR 7P CONNECTOR
Wire side of female terminals

Is there continuity?

YES - Check for loose wires or poor connections at the climate control unit 20P connector and at the air mix control motor 7P connector. If the connections are good, substitute a known-good climate control unit, and recheck. If the symptom/indication goes away, replace the original climate control unit.■

NO - Repair any open in the wire(s) between the climate control unit and the air mix control motor.■

DTC indicator light J: A short in the air mix control motor circuit

1. Disconnect the air mix control motor 7P connector.
2. Disconnect the climate control unit 20P connector.
3. Check for continuity between body ground and the climate control unit 20P connector terminals No. 1, 7, 9, 11 and 13 individually.

CLIMATE CONTROL UNIT 20P CONNECTOR
Wire side of female terminals

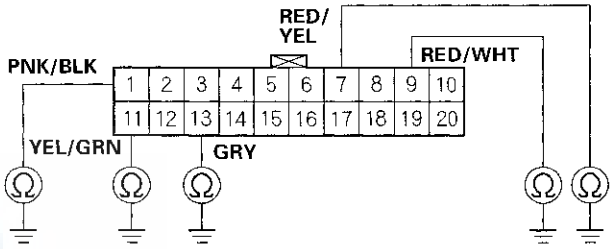

Is there continuity?

YES - Repair any short to body ground in the wire(s) between the climate control unit and the air mix control motor.■

NO - Go to step 4.

(cont'd)

DTC Troubleshooting (cont'd)

4. Turn the ignition switch ON (II), and check the same terminals for voltage.

CLIMATE CONTROL UNIT 20P CONNECTOR
Wire side of female terminals

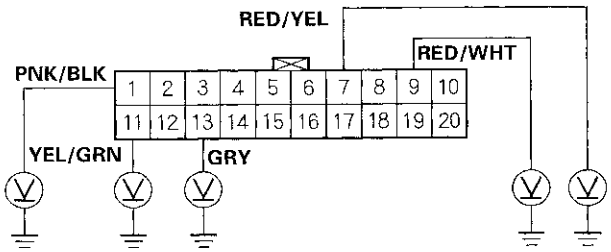

Is there any voltage?

YES—Repair any short to power in the wire(s) between the climate control unit and the air mix control motor. This short also damages the climate control unit. Repair the short to power before replacing the climate control unit.■

NO—Substitute a known-good climate control unit, and recheck. If the symptom/indication goes away, replace the original climate control unit.■

DTC indicator light K: A problem in the air mix control linkage, door and motor

1. Test the air mix control motor, refer to the '98-01 Accord Service Manual (see page 21-20).

   Is the air mix control motor OK?

   YES—Substitute a known-good climate control unit, and recheck. If the symptom/indication goes away, replace the original climate control unit.■

   NO—Go to step 2.

2. Remove the air mix control motor, refer to the '98-01 Accord Service Manual (see page 21-20).

3. Check the air mix control linkage and door for smooth movement.

   Do the air mix control linkage and door move smoothly?

   YES—Replace the air mix control motor.■

   NO—Repair the air mix control linkage or door.■

DTC indicator light L: An open or short in the mode control motor circuit

1. Disconnect the mode control motor 7P connector.
2. Disconnect the climate control unit 20P connector.
3. Check for continuity between body ground and the climate control unit 20P connector terminals No. 5, 6, 11, 17, 18, 19 and 20 individually.

CLIMATE CONTROL UNIT 20P CONNECTOR

Wire side of female terminals

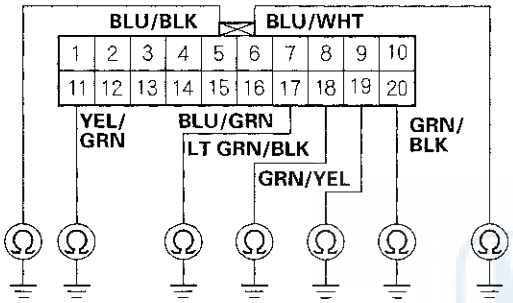

Is there continuity?

YES – Repair any short to body ground in the wire (s) between the climate control unit and the mode control motor. ■

NO – Go to step 4.

4. Turn the ignition switch ON (II), and check the same terminals for voltage.

CLIMATE CONTROL UNIT 20P CONNECTOR

Wire side of female terminals

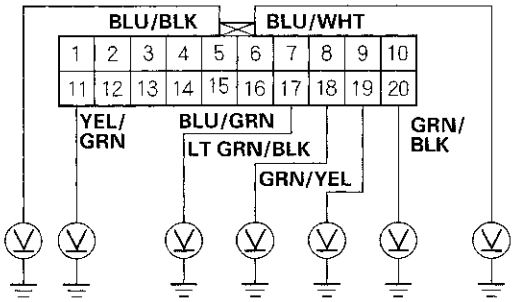

Is there any voltage?

YES – Repair any short to power in the wire(s) between the climate control unit and the mode control motor. This short also damages the climate control unit. Repair the short to power before replacing the climate control unit. ■

NO – Go to step 5.

(cont'd)

DTC Troubleshooting (cont'd)

5. Turn the ignition switch OFF, and check for continuity between following terminals of the climate control unit 20P connector and the mode control motor 7P connector.

20P:	7P:
No. 5	No. 1
No. 6	No. 2
No. 11	No. 7
No. 17	No. 3
No. 18	No. 4
No. 19	No. 5
No. 20	No. 6

CLIMATE CONTROL UNIT 20P CONNECTOR

Wire side of female terminals

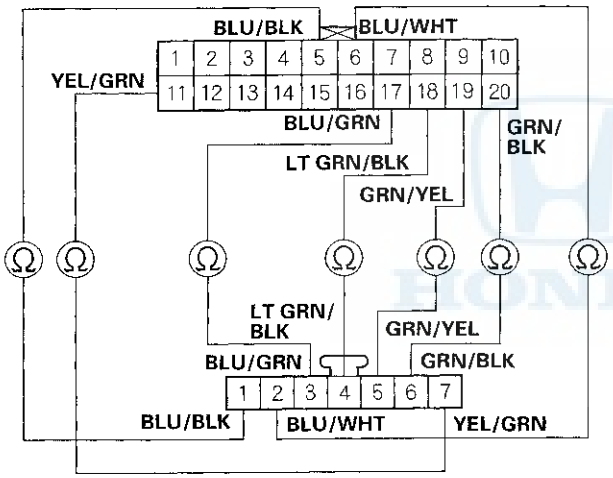

MODE CONTROL MOTOR 7P CONNECTOR

Wire side of female terminals

Is there continuity?

YES – Check for loose wires or poor connections at the climate control unit 20P connector and at the mode control motor 7P connector. If the connections are good, substitute a known-good climate control unit, and recheck. If the symptom/indication goes away, replace the original climate control unit. ■

NO – Repair any open in the wire(s) between the climate control unit and the mode control motor. ■

DTC indicator light M: A problem in the mode control linkage, doors and motor

1. Test the mode control motor, refer to the '98-01 Accord Service Manual (see page 21-21).

   Is the mode control motor OK?

   YES – Substitute a known-good climate control unit, and recheck. If the symptom/indication goes away, replace the original climate control unit. ■

   NO – Go to step 2.

2. Remove the mode control motor, refer to the '98-01 Accord Service Manual (see page 21-21).

3. Check the mode control linkage and doors for smooth movement.

   Do the mode control linkage and doors move smoothly?

   YES – Replace the air mix control motor. ■

   NO – Repair the mode control linkage or doors. ■

DTC indicator light N: A problem in the blower motor circuit

1. Turn the ignition switch ON (II) and turn the blower fan speed knob to HIGH.

   Does the blower motor run?

   YES – Go to step 2.

   NO – Go to step 15.

2. Turn the ignition switch OFF, then disconnect the power transistor 5P connector.

3. Check for continuity between the No. 5 terminal of the power transistor 5P connector and body ground.

POWER TRANSISTOR 5P CONNECTOR
Wire side of female terminals

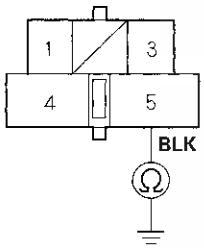

Is there continuity?

YES – Go to step 4.

NO – Check for an open in the wire between the power transistor and body ground. If the wire is OK, check for poor ground at G401. ■

4. Connect the No. 4 and No. 5 terminals of the power transistor 5P connector with a jumper wire.

POWER TRANSISTOR 5P CONNECTOR
Wire side of female terminals

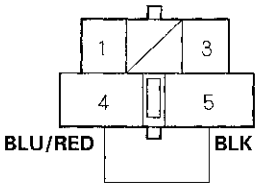

JUMPER WIRE

5. Turn the ignition switch ON (II).

   Does the blower motor run at high speed?

   YES – Go to step 6.

   NO – Repair open in the wire between the power transistor and the blower motor. ■

6. Turn the ignition switch OFF.

7. Disconnect the jumper wire.

8. Disconnect the climate control unit 8P connector.

(cont'd)

DTC Troubleshooting (cont'd)

9. Check for continuity between the No. 5 terminal of the climate control unit 8P connector and the No. 3 terminal of the power transistor 5P connector.

CLIMATE CONTROL UNIT 8P CONNECTOR
Wire side of female terminals

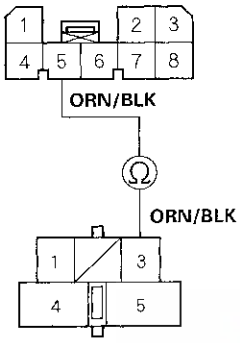

POWER TRANSISTOR 5P CONNECTOR
Wire side of female terminals

Is there continuity?

YES – Go to step 10.

NO – Repair open in the wire between the climate control unit and the power transistor. ■

10. Check for continuity between the No. 5 terminal of the climate control unit 8P connector and body ground.

CLIMATE CONTROL UNIT 8P CONNECTOR
Wire side of female terminals

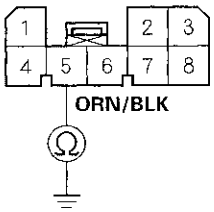

Is there continuity?

YES – Repair short to body ground in the wire between the climate control unit and the power transistor. ■

NO – Go to step 11.

11. Check for continuity between the No. 6 terminal of the climate control unit 8P connector and the No. 1 terminal of the power transistor 5P connector.

CLIMATE CONTROL UNIT 8P CONNECTOR
Wire side of female terminals

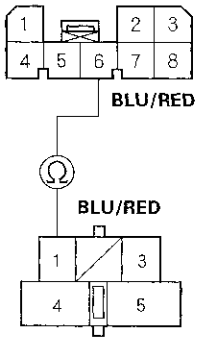

POWER TRANSISTOR 5P CONNECTOR
Wire side of female terminals

Is there continuity?

YES – Go to step 12.

NO – Repair open in the wire between the climate control unit and the power transistor. ■

12. Check for continuity between the No. 6 terminal of the climate control unit 8P connector and body ground.

CLIMATE CONTROL UNIT 8P CONNECTOR
Wire side of female terminals

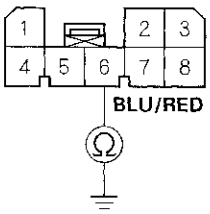

Is there continuity?

YES – Repair short to body ground in the wire between the climate control unit and the power transistor. ■

NO – Go to step 13.

13. Reconnect the climate control unit 8P connector.

14. Test the power transistor (see page 21-58).

    Is the power transistor OK?

    YES—Check for loose wires or poor connections at the climate control unit 8P connector and at the power transistor 5P connector. If the connections are good, substitute a known-good climate control unit, and recheck. If the symptom/indication goes away, replace the original climate control unit. ■

    NO—Replace the power transistor. ■

15. Turn the ignition switch OFF, and check the No. 56 (40 A) fuse in the under-hood fuse/relay box, and No. 3 (7.5 A) fuse in the driver's under-dash fuse/relay box.

    Are the fuses OK?

    YES—Go to step 16.

    NO—Replace the fuse(s), and recheck. ■

16. Connect the No. 2 terminal of the blower motor 2P connector to body ground with a jumper wire.

BLOWER MOTOR 2P CONNECTOR
Wire side of female terminals

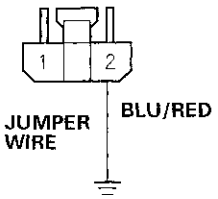

17. Turn the ignition switch ON (II).

    Does the blower motor run?

    YES—Go to step 18.

    NO—Go to step 31.

18. Turn the ignition switch OFF.

19. Disconnect the jumper wire.

20. Remove the blower motor high relay, and test it, refer to the '98-01 Accord Service Manual (see page 22-52).

    Is the relay OK?

    YES—Go to step 21.

    NO—Replace the blower motor high relay. ■

21. Connect the No. 4 terminal of the blower motor high relay 5P connector to body ground with a jumper wire.

BLOWER MOTOR HIGH RELAY 5P CONNECTOR
Wire side of female terminals

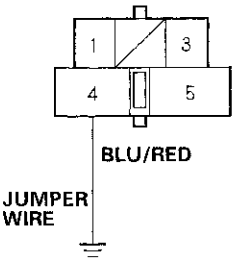

22. Turn the ignition switch ON (II).

    Does the blower motor run?

    YES—Go to step 23.

    NO—Repair open in the wire between the blower motor high relay and the blower motor. ■

23. Turn the ignition switch OFF.

24. Disconnect the jumper wire.

25. Turn the ignition switch ON (II).

(cont'd)

DTC Troubleshooting (cont'd)

26. Measure the voltage between the No. 1 terminal of the blower motor high relay 5P connector and body ground.

BLOWER MOTOR HIGH RELAY 5P CONNECTOR

Wire side of female terminals

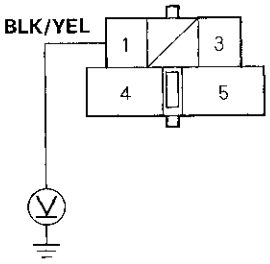

Is there battery voltage?

YES – Go to step 27.

NO – Repair open in the wire between the blower motor high relay and the No. 3 fuse in the driver's under-dash fuse/relay box. ■

27. Turn the ignition switch OFF.

28. Check for continuity between the No. 5 terminal of the blower motor high relay 5P connector and body ground.

BLOWER MOTOR HIGH RELAY 5P CONNECTOR

Wire side of female terminals

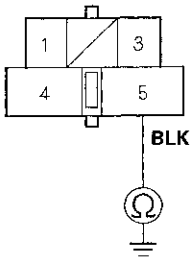

Is there continuity?

YES – Go to step 29.

NO – Check for an open in the wire between the blower motor high relay and body ground. If the wire is OK, check for poor ground at G401. ■

29. Disconnect the climate control unit 8P connector.

30. Check for continuity between the No. 3 terminal of the climate control unit 8P connector and the No. 3 terminal of the blower motor high relay 5P connector.

CLIMATE CONTROL UNIT 8P CONNECTOR

Wire side of female terminals

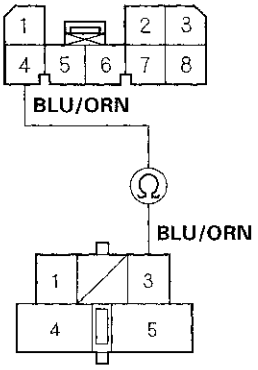

BLOWER MOTOR HIGH RELAY 5P CONNECTOR

Wire side of female terminals

Is there continuity?

YES – Check for loose wires or poor connections at the climate control unit 8P connector and at the blower motor high relay 5P connector. If the connections are good, substitute a known-good climate control unit, and recheck. If the symptom/indication goes away, replace the original climate control unit. ■

NO – Repair open in the wire between the climate control unit and the blower motor high relay. ■

31. Disconnect the jumper wire.

32. Disconnect the blower motor 2P connector.

33. Measure the voltage between the No. 1 terminal of the blower motor 2P connector and body ground.

BLOWER MOTOR 2P CONNECTOR
Wire side of female terminals

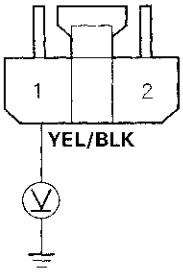

Is there battery voltage?

YES—Replace the blower motor.■

NO—Go to step 34.

34. Turn the ignition switch OFF.

35. Remove the blower motor relay from the under-hood fuse/relay box, and test it, refer to the '98-01 Accord Service Manual (see page 22-52).

Is the relay OK?

YES—Go to step 36.

NO—Replace the blower motor relay.■

36. Measure the voltage between the No. 4 terminal of the blower motor relay 4P socket and body ground.

BLOWER MOTOR RELAY 4P SOCKET

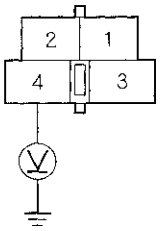

Is there battery voltage?

YES—Go to step 37.

NO—Replace the under-hood fuse/relay box.■

37. Turn the ignition switch ON (II).

38. Measure the voltage between the No. 1 terminal of the blower motor relay 4P socket and body ground.

BLOWER MOTOR RELAY 4P SOCKET

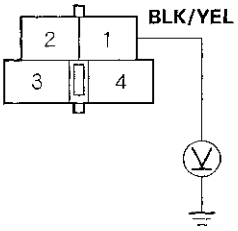

Is there battery voltage?

YES—Go to step 39.

NO—Repair open in the wire between the No. 3 fuse in the driver's under-dash fuse/relay box and the blower motor relay.■

(cont'd)

DTC Troubleshooting (cont'd)

39. Turn the ignition switch OFF.

40. Check for continuity between the No. 2 terminal of the blower motor relay 4P socket and body ground.

BLOWER MOTOR RELAY 4P SOCKET

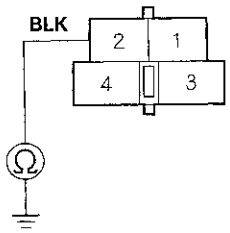

Is there continuity?

YES – Repair open in the wire between the blower motor relay and the blower motor. ■

NO – Check for an open in the wire between the blower motor relay and body ground. If the wire is OK, check for poor ground at G202. ■

ECT Sensor Circuit Troubleshooting

1. Check the malfunction indicator lamp (MIL).

   Does the malfunction indicator lamp come on?

   YES – Refer to the fuel and emissions section of the '98-01 Accord Service Manual (see page 11-3). ■

   NO – Go to step 2.

2. Turn the ignition switch OFF.

3. Disconnect the ECT sensor 2P connector.

4. Disconnect the climate control unit 8P connector.

5. Turn the ignition switch ON (II).

6. Measure the voltage between the No. 3 terminal of the climate control unit 8P connector and body ground.

CLIMATE CONTROL UNIT 8P CONNECTOR

Wire side of female terminals

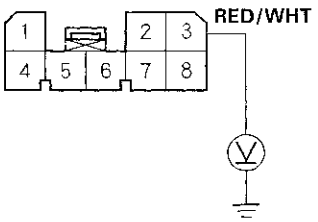

Is there approximately 5 volts?

YES – Check for loose wires or poor connections at the climate control unit 8P connector and at the ECT sensor 2P connector. If the connections are good, substitute a known-good climate control unit, and recheck. If the symptom/indication goes away, replace the original climate control unit. ■

NO – Repair open in the wire between the climate control unit and the ECT sensor. ■

Climate Control Power and Ground Circuits Troubleshooting

1. Check the No. 54 (40A) fuse in the under-hood fuse/relay box, the No. 3 (7.5A) fuse in the driver's under-dash fuse/relay box, and the No. 13 (7.5A) fuse in the passenger's under-dash fuse/relay box.

   Are the fuses OK?

   YES – Go to step 2.

   NO – Replace the fuse(s), and recheck. ■

2. Disconnect the climate control unit 8P connector.

3. Turn the ignition switch ON (II).

4. Measure the voltage between the No. 1 terminal of the climate control unit 8P connector and body ground.

   CLIMATE CONTROL UNIT 8P CONNECTOR
   Wire side of female terminals

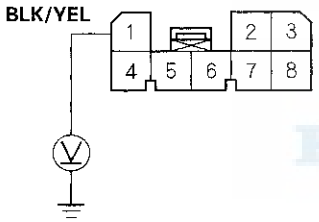

   Is there battery voltage?

   YES – Go to step 5.

   NO – Repair open in the wire between the No. 3 fuse in the driver's under-dash fuse/relay box and the climate control unit. ■

5. Turn the ignition switch OFF.

6. Measure the voltage between the No. 2 terminal of the climate control unit 8P connector and body ground.

   CLIMATE CONTROL UNIT 8P CONNECTOR
   Wire side of female terminals

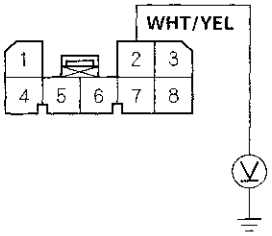

   Is there battery voltage?

   YES – Go to step 7.

   NO – Repair open in the wire between the No. 13 fuse in the passenger's under-dash fuse/relay box and the climate control unit. ■

7. Check for continuity between the No. 8 terminal of the climate control unit 8P connector and body ground.

   CLIMATE CONTROL UNIT 8P CONNECTOR
   Wire side of female terminals

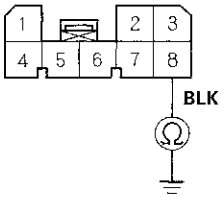

   Is there continuity?

   YES – Check for loose wires or poor connections at the climate control unit 8P connector. If the connections are good,substitute a known-good climate control unit, and recheck. If the symptom/indication goes away, replace the original climate control unit. ■

   NO – Check for an open in the wire between the blower motor high relay and body ground. If the wire is OK, check for poor ground at G401. ■

Recirculation Control Motor Circuit Troubleshooting

1. Check the No. 3 (7.5A) fuse in the driver's under-dash fuse/relay box.

   Is the fuses OK?

   YES - Go to step 2.

   NO - Replace the fuse, and recheck. ■

2. Disconnect the recirculation control motor 7P connector.

3. Turn the ignition switch ON (II).

4. Measure the voltage between the No. 1 terminal of the recirculation control motor 7P connector and body ground.

RECIRCULATION CONTROL MOTOR 7P CONNECTOR
Wire side of female terminals

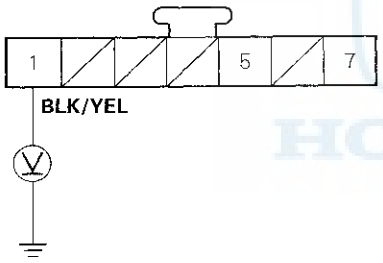

Is there battery voltage?

YES - Go to step 5.

NO - Repair open in the wire between the recirculation control motor and the No. 3 fuse in the driver's under-dash fuse/relay box. ■

5. Turn the ignition switch OFF.

6. Test the recirculation control motor, refer to the '98-01 Accord Service Manual (see page 21-22).

   Is the recirculation control motor OK?

   YES - Go to step 7.

   NO - Go to step 11.

7. Disconnect the climate control unit 20P connector.

8. Check for continuity between the No. 3 and No. 4 terminals of the climate control unit 20P conector and body ground individually.

CLIMATE CONTROL UNIT 20P CONNECTOR
Wire side of female terminals

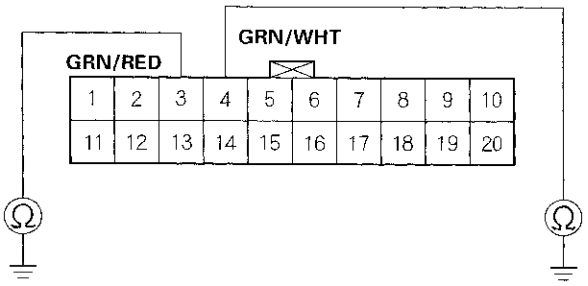

Is there continuity?

YES - Repair any short to body ground in the wire (s) between the climate control unit and the recirculation control motor. ■

NO - Go to step 9.

9. Turn the ignition switch ON(II), and check the same wires for voltage.

CLIMATE CONTROL UNIT 20P CONNECTOR
Wire side of female terminals

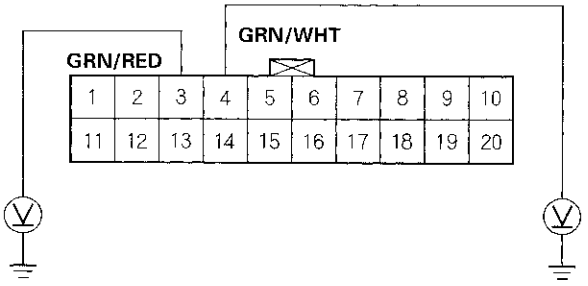

Is there any voltage?

YES - Repair any short to power in the wire(s) between the climate control unit and the recirculation control motor. This short also damages the climate control unit. Repair the short to power before replacing the climate control unit. ■

NO - Go to step 10.

10. Turn the ignition switch OFF, and check for continuity between the following terminals of the climate control unit 20P connector and the recirculation control motor 7P connector.

20P:	7P:
No. 3	No. 5
No. 4	No. 7

CLIMATE CONTROL UNIT 20P CONNECTOR
Wire side of female terminals

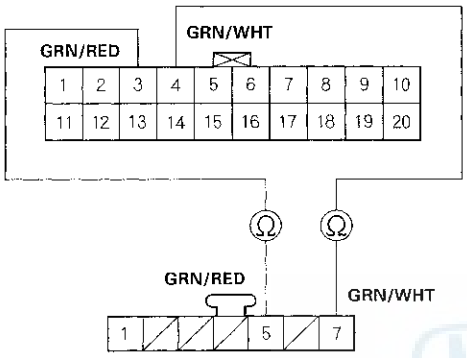

RECIRCULATION CONTROL MOTOR 7P CONNECTOR
Wire side of female terminals

Is there continuity?

YES – Check for loose wires or poor connections at the climate control unit 20P connector and at recirculation control motor 7P connector. If the connections are good, substitute a known-good climate control unit, and recheck. If the symptom/indication goes away, replace the original climate control unit. ■

NO – Repair any open in the wire(s) between the climate control unit and the recirculation control motor. ■

11. Remove the recirculation contol motor, refer to the '98-01 Accord Service Manual (see page 21-22).

12. Check the recirculation control linkage and doors for smooth movement.

Do the recirculation control linkage and doors move smoothly?

YES – Replace the recirculation control motor. ■

NO – Repair the recirculation control linkage or doors. ■

A/C Pressure Switch Circuit Troubleshooting

1. Disconnect the A/C pressure switch 2P connector.

2. Turn the ignition switch ON (II).

3. Measure the voltage between the No. 2 terminal of the A/C presure switch 2P connector and body ground.

A/C PRESSURE SWITCH 2P CONNECTOR
Wire side of female terminals

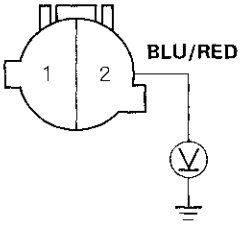

Is there approximately 5 volts?

YES – Go to step 4.

NO – Go to step 10.

4. Turn the ignition switch OFF.

5. Check for continuity between the No. 1 and No. 2 terminals of the A/C pressure switch.

A/C PRESSURE SWITCH

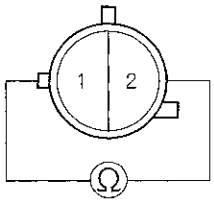

Is there continuity?

YES – Go to step 6.

NO – Go to step 11.

(cont'd)

A/C Pressure Switch Circuit Troubleshooting (cont'd)

6. Reconnect the A/C pressure switch 2P connector.

7. Disconnect the climate control unit 20P connector.

8. Turn the ignition switch ON (II).

9. Measure the voltage between the No. 2 terminal of the climate control unit 20P connector and body ground.

CLIMATE CONTROL UNIT 20P CONNECTOR
Wire side of female terminals

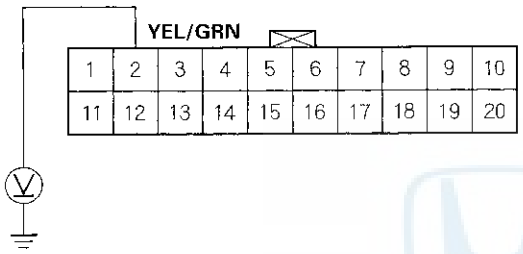

Is there approximately 5 volts?

YES Check for loose wires or poor connections at the climate control unit 20P connector and at the A/C pressure switch 2P connector. If the connections are good, substitute a known-good climate control unit, and recheck. If the symptom/indication goes away, replace the original climate control unit. ■

NO – Repair open in the wire between the climate control unit and the A/C pressure switch. ■

10. Using a Backprobe Set, measure the voltage between the No. 27 terminal of the PCM connector A (32P) and body ground with the PCM connectors connected.

PCM CONNECTOR A (32P)
Wire side of female terminals

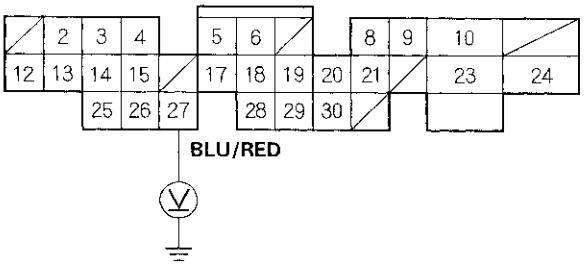

Is there approximately 5 volts?

YES – Repair open in the wire between the PCM and the A/C pressure switch. ■

NO – Check for loose wires or poor connections at the PCM connector A (32P). If the connections are good, substitute a known-good PCM, and recheck. If the symptom/indication goes away, replace the original PCM. ■

11. Check for proper A/C system pressure.

Is the pressure within specifications?

YES - Replace the A/C pressure switch. ■

NO - Repair the A/C pressure problem. ■

In-car Temperature Sensor Replacement

1. Remove the in-car temperature sensor (A) from the dashboard, then disconnect the 2P connector (B) and the air hose (C). Be careful not to damage the sensor and the dashboard.

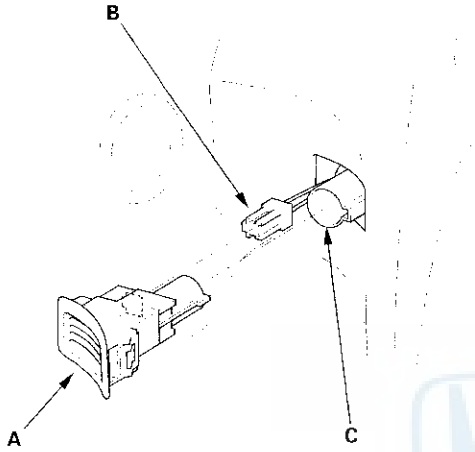

2. Install the sensor in the reverse order of removal. Be sure to connect the air hose securely.

In-car Temperature Sensor Test

Check for a change in resistance by heating or cooling the sensor with a hair drier.

Compare the resistance reading between the No. 1 and No. 2 terminals of the in-car temperature sensor with the specifications shown in the graph; the resistance should be within the specifications.

IN-CAR TEMPERATURE SENSOR

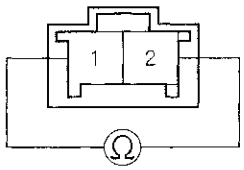

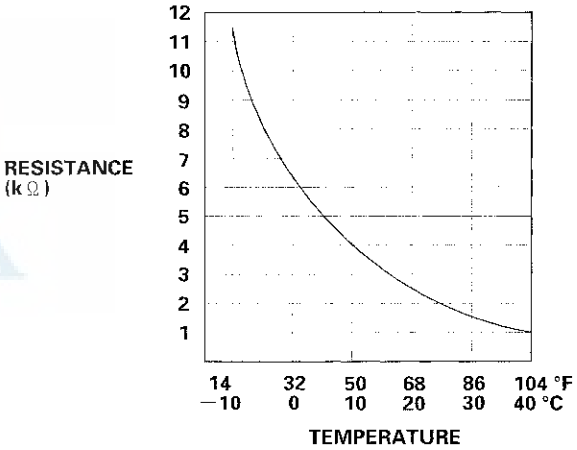

Outside Air Temperature Sensor Replacement

1. Disconnect the 2P connector from the outside air temperature sensor. Release the lock, and remove the outside air temperature sensor.

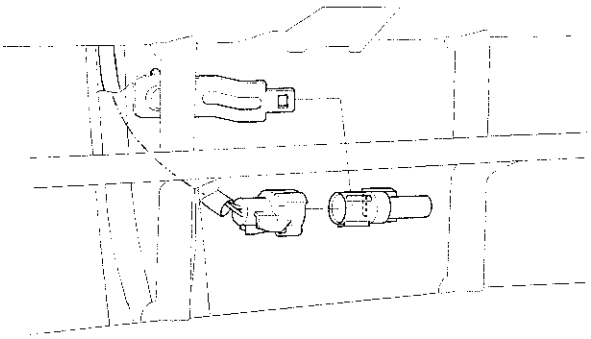

2. Install the sensor in the reverse order of removal.

Outside Air Temperature Sensor Test

Dip the sensor in ice water, and measure the resistance. Then pour hot water on the sensor, and check for a change in resistance.

Compare the resistance reading between the No. 1 and No. 2 terminals of the outside air temperature sensor with the specifications shown in the graph; the resistance should be within the specifications.

OUTSIDE AIR TEMPERATURE SENSOR

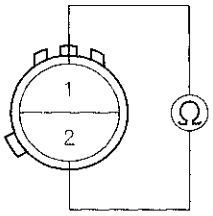

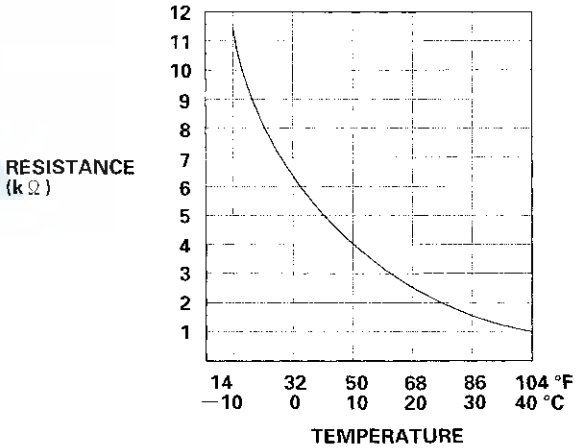

Sunlight Sensor Replacement

1. Remove the sunlight sensor from the dashboard, then disconnect the 2P connector. Be careful not to damage the sensor and the dashboard.

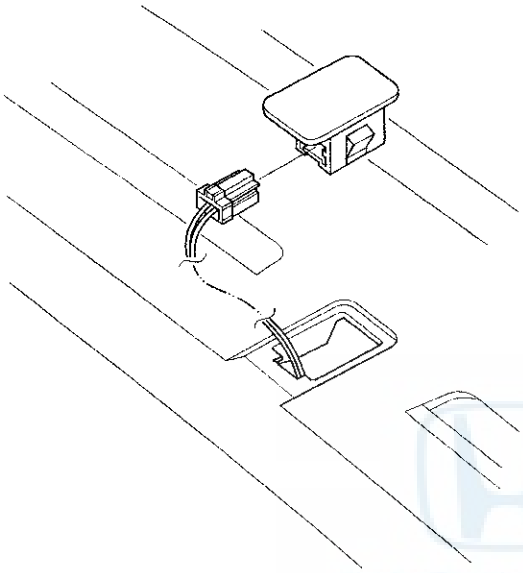

2. Install the sensor in the reverse order of removal.

Sunlight Sensor Test

Turn the ignition switch ON (II). Measure the voltage between the terminals with the (+) probe on the No. 1 terminal and the (−) probe on the No. 2 terminal with the 2P connector connected. The voltage will not change under the light of a flashlight or a fluorescent lamp. Voltage should be:

- 3.6−3.7 V or more with the sensor out of direct sunlight.
- 3.3−3.5 V or less with the sensor in direct sunlight.

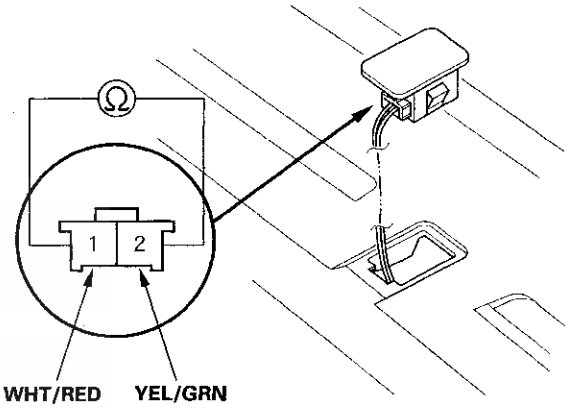

Power Transistor Test

1. Disconnect the 5P connector from the power transistor.

2. Measure the resistance between the No. 1 and No. 4 terminals of the power transistor. If should be approximately 1.4 – 1.5 kΩ.

   - If the resistance is within the specifications, go to step 3.
   - If the resistance is not within the specifications, replace the power transistor.

POWER TRANSISTOR

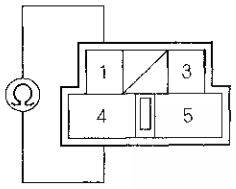

3. Carefully release the lock tab on the No. 3 terminal (ORN/BLK) (A) in the 5P connector, then remove the terminal and insulate it from body ground.

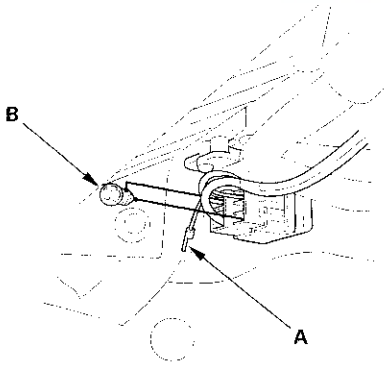

4. Connect a 1.2 3.4 W bulb (B) between the No. 3 and the No. 4 cavity on the 5P connector.

5. Reconnect the 5P connector to the power transistor.

6. Turn the ignition switch ON (II), and check that the blower motor runs.

   - If the blower motor does not run, replace the power transistor.
   - If the blower motor runs, replace the climate control unit.

Climate Control Unit Removal and Installation

1. Remove the center panel together with the climate control unit, refer to the '98-01 Accord Service Manual (see page 20-86).

2. Remove the self-tapping screws and the climate control unit (A) from the center pagnel (B).

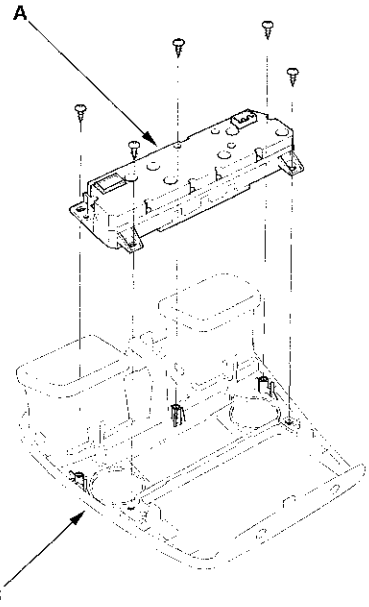

3. Install the control unit in the reverse order of removal. After installation, operate the control unit controls to see whether it works properly.

4. Run the self-diagnosis function to comfirm that there are no problems in the system (see page 21-28).

Climate Control Unit Disassembly and Reassembly

1. Remove the fan switch (A) and temperature control (B) dials, then remove the front (C), temperature control (D) and fan switch (E) panels. Remove A/C switch (F), MODE control switch (G), AUTO switch (H), OFF switch (I), recirculation control switch (J), front defroster switch (K) and rear defogger switch (L) buttons.

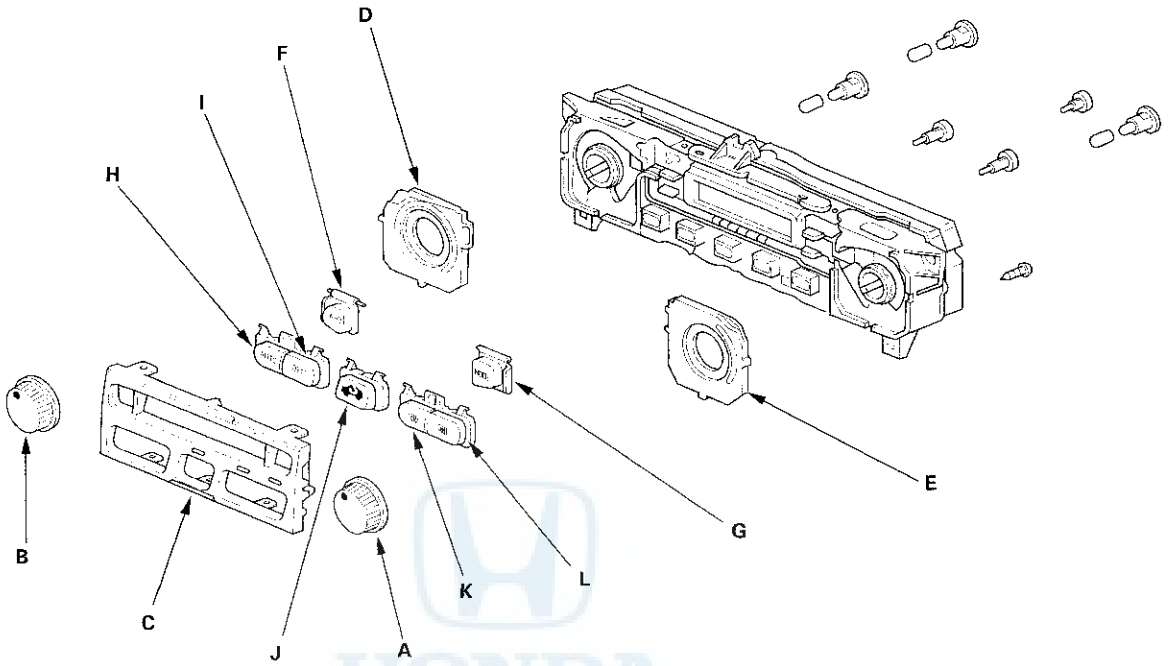

2. Reassemble the control unit in the reverse order of removal.

SUPPLEMENTAL RESTRAINT SYSTEM (SRS) (If Electrical maintenance is required)

The Accord Sedan/Coupe (V6) SRS includes a driver's airbag located in the steering wheel hub, a passenger's airbag located in the dashboard above the glove box, and side airbags ('00-01 models) located in the front seat-backs. Information necessary to safely service the SRS is included in the '98-01 Accord Sedan/Coupe (L4) Service Manual, P/N 61S8008. Items marked with an asterisk (*) on the contents page include or are located near SRS components. Servicing, disassembling or replacing these items will require special precautions and tools, and should therefore be done by and authorized Honda dealer.

- To avoid rendering the SRS inoperative, which could lead to personal injury or death in the event of a severe frontal collision, all SRS service work must be performed by an authorized Honda dealer.
- Improper service procedures, including incorrect removal and installation of the SRS, could lead to personal injury caused by unintentional deployment of the frontal airbags (and/or side airbags on some '00-01 models).
- Do not bump the SRS unit, Otherwise, the system may fail in case of a collision, or the airbags may deploy when the ignition switch is ON (II).
- SRS electrical wiring harnesses are indicated with yellow color coding. Related components are located in the steering column, front console, dashboard, dashboard lower panel, in the dashboard above the glove box, in the front seats ('00-01 models) and around the floor ('00-01 models). Do not use electrical test equipment on these circuits.

Body Electrical

NOTE: Refer to the '98- 01 Accord Service Manual, P/N 61S8007, for the items not shown in this section.

Outline of V6 Model Chenges

1998 model:
- The ABS control unit location has been changed; related component locations are included.
- A blower motor high relay and a radiator fan control module have been added; related componet locations are included.
- The wire harness and ground locations have been changed.
- The bulb locations in the gauges have been changed.
- The stereo sound system has been changed.
- Homelink remote control system has been added; related information is included.
- Circuit diagrams which differ from those in the '98 Accord Service Manual have been included.

1999 model:
- There are no changes to the 1998 model.

2000 model:
- There side airbag system has been added; related information is included.
- The engine wire harness has been changed.
- Circuit diagrams which differ from theose in the '98-99 Accord Service Manual have been included.

2001 model:
- The seat heater relay location has been changed
- The ABS/TCS control unit, TCS relay, and TCS indicator have been added.
- The wire harness and ground locations have been changed.
- The passenger's power seat has been added in the sedan.
- Circuit diagrams which differ from those in the '98-01 Accord Service Manual have been included.

Relay and Control Unit Locations

Engine Compartment

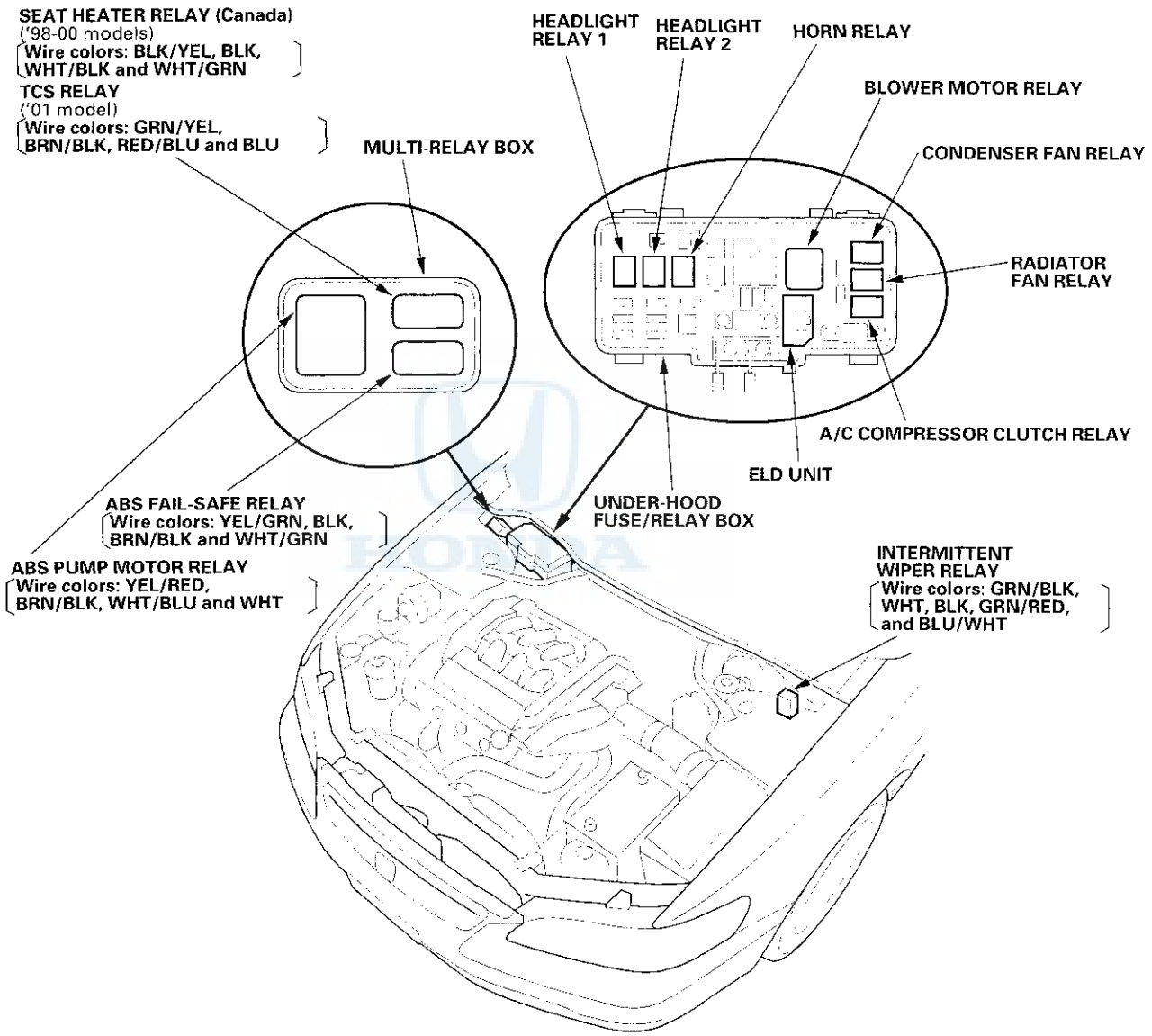

Dashboard

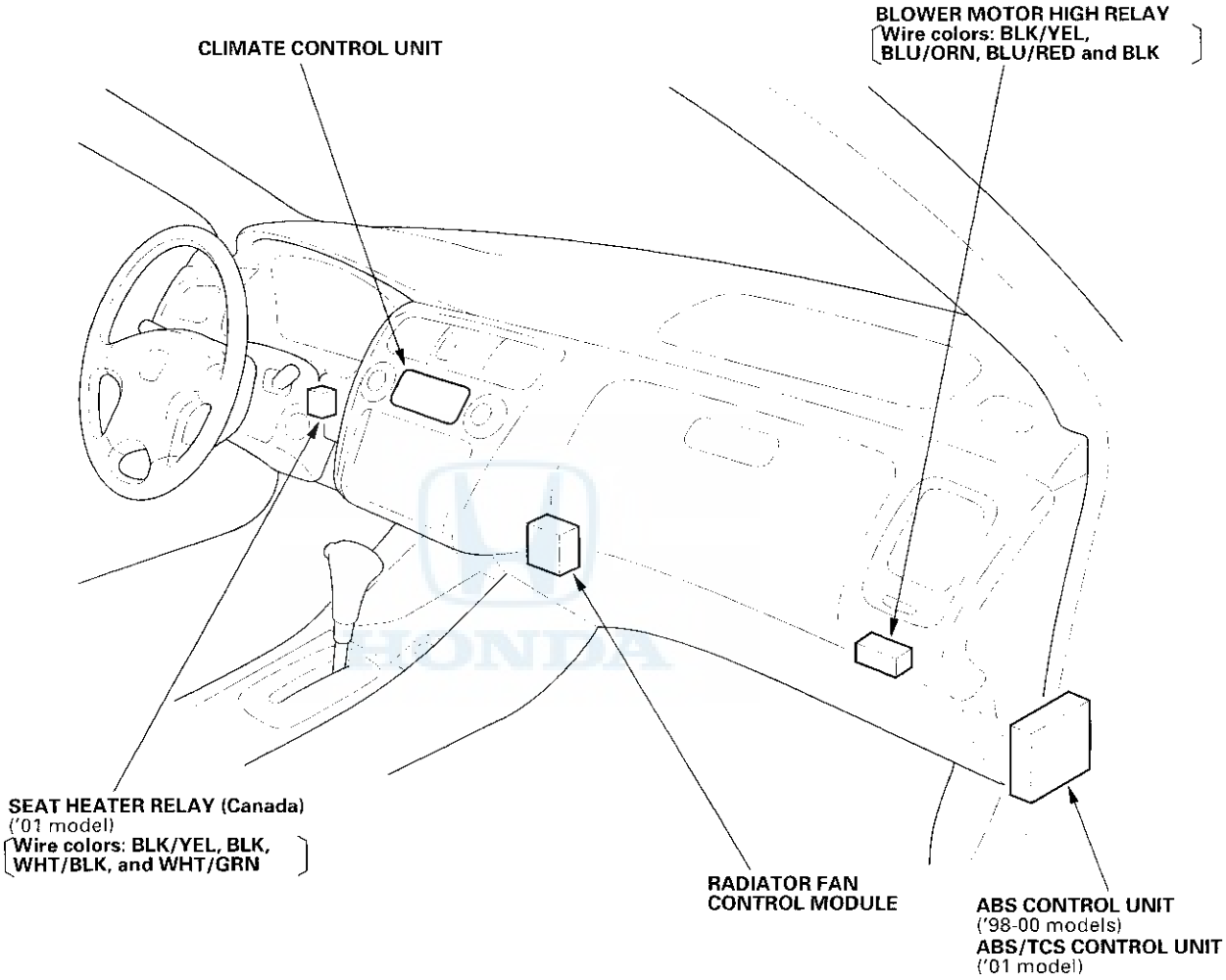
CLIMATE CONTROL UNIT
BLOWER MOTOR HIGH RELAY
(Wire colors: BLK/YEL, BLU/ORN, BLU/RED and BLK)
SEAT HEATER RELAY (Canada)
('01 model)
(Wire colors: BLK/YEL, BLK, WHT/BLK, and WHT/GRN)
RADIATOR FAN CONTROL MODULE
ABS CONTROL UNIT
('98-00 models)
ABS/TCS CONTROL UNIT
('01 model)

Connectors and Harnesses

Connector Index

Identification numbers have been assigned to in-line connectors. The number is preceded by the letter "C" for connectors, "G" for ground terminals or "T" for non-ground terminals.

Harness	Location			
	Engine Compartment	Dashboard	Others (Floor, Door, Trunk, and Roof)	Notes
Starter cable	T1, T2 and (+)			(see page 22-5)
Battery ground cable	T3 G1 and (−)			(see page 22-5)
Engine ground cable	T4 G2			(see page 22-5)
Engine wire harness	C103 through C108 T101 and T102 G101 and G102			(see page 22-6)
Right engine compartment wire harness	G201 through G205	C201 through C204		(see page 22-12)
Left engine compartment wire harness	G301 and G302	C103 and C104 C301 and C302		(see page 22-14)
Dashboard wire harness B (left branch)		C301, C401 and C402 G401		(see page 22-16)
Dashboard wire harness B (right branch)		C201 through C203 and C403		(see page 22-16)
Dashboard wire harness A		C204, C302 and C401 G501 and G502	C501 through C505 and C582 G503 and G504	(see page 22-18)
Left side wire harness			C501 and C551 through C557 G551 and G552	Refer to the '98-01 Accord Service Manual (see page 22-24)
Right side wire harness			C581 through C586 and C851 G581	(see page 22-20)
Rear wire harness			C554 and C601 G601	Refer to the '98-01 Accord Service Manual (see page 22-28)
Moonroof wire harness			C502	Refer to the '98-01 Accord Service Manual (see page 22-30)
Roof wire harness				Refer to the '98-01 Accord Service Manual (see page 22-30)
Driver's power seat wire harness			C551	Refer to the '98-01 Accord Service Manual (see page 22-31)
Passenger's power seat wire harness ('01 Sedan)			C701	(see page 22-22)
Driver's door wire harness			C631 and C632	Refer to the '98-01 Accord Service Manual (see page 22-32)
Passenger's door wire harness				Refer to the '98-01 Accord Service Manual (see page 22-34)
Left rear door wire harness			C553	Refer to the '98-01 Accord Service Manual (see page 22-36)
Right rear door wire harness			C581	Refer to the '98-01 Accord Service Manual (see page 22-37)
Ignition switch harness		C404		Refer to the '98-01 Accord Service Manual (see page 22-38)
SRS main harness		C503	C556, C557, C583 and C584 G801	Refer to the '98-01 Accord Service Manual (see page 22-38)
SRS floor harness (Sedan)			C505 and C851	Refer to the '98-01 Accord Service Manual (see page 22-39)
OPDS wire harness (with side airbags)			C851	Refer to the '98-01 Accord Service Manual (see page 22-42)
Rear window defogger wire harness				Refer to the '98-01 Accord Service Manual (see page 22-42)

Connector to Harness Index

Starter Cable

Connector or Terminal	Ref	Cavities	Location	Connects to	Notes
T1	1		Right side of engine compartment	Under-hood fuse/relay box	
T2	2		Left side of engine compartment	Starter motor	
(+)			Battery	Battery positive terminal	

Battery Ground Cable

Connector or Terminal	Ref	Cavities	Location	Connects to	Notes
T3	6		Left side of engine compartment	Transmission housing	
G1	5		Left side of engine compartment	Body ground via battery ground cables	
(−)			Battery	Battery negative terminal	

Engine Ground Cable ('99 model)

Connector or Terminal	Ref	Cavities	Location	Connects to	Notes
T4	8		Middle of engine compartment	Valve cover	
G2	7		Right side of engine compartment	Body ground via engine ground cable	

Engine Ground Cable ('00-01 models)

Connector or Terminal	Ref	Cavities	Location	Connects to	Notes
T4	4		Left side of engine compartment	Transmission housing	
G2	3		Left side of engine compartment	Body ground via engine ground cable	

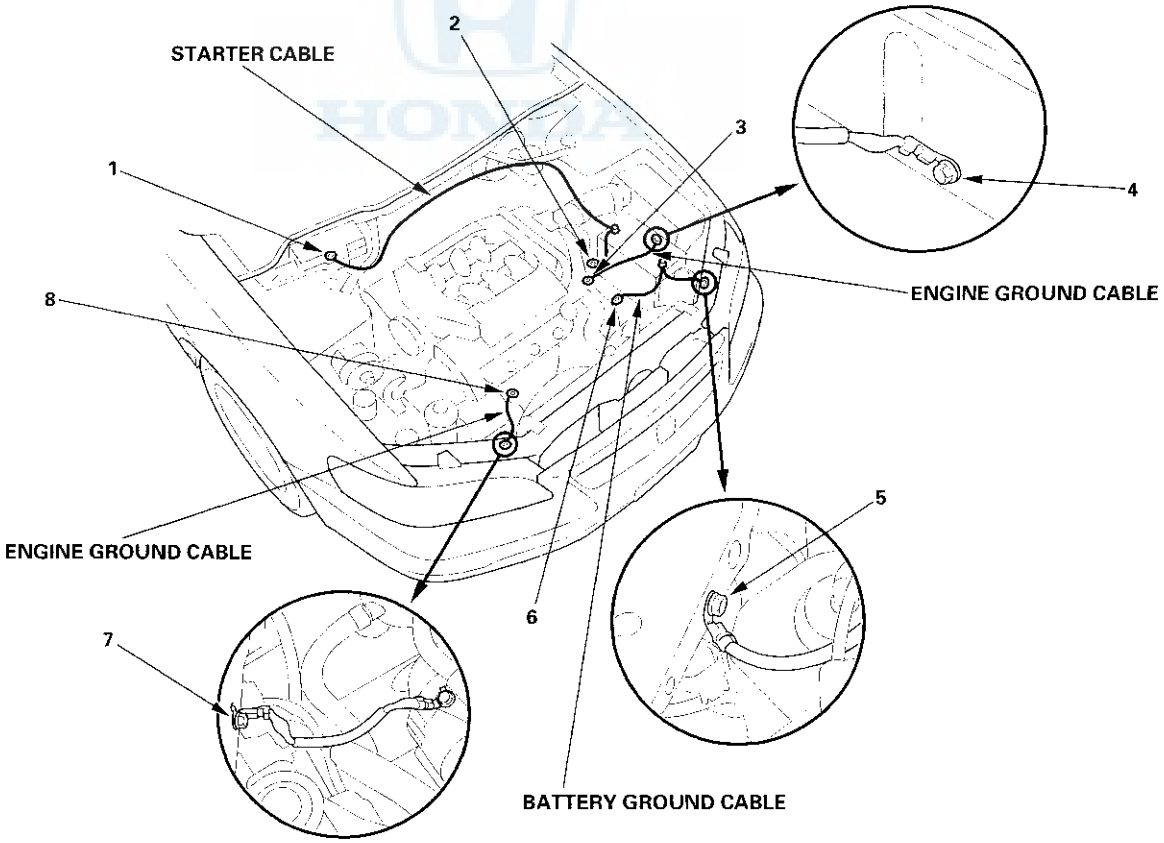

Connector to Harness Index (cont'd)

Engine Wire Harness ('98-99 models)

Connector or Terminal	Ref	Cavities	Location	Connects to	Notes
Alternator	42	4	Right side of engine compartment		
A/T clutch pressure control valve A	27	2	Right side of engine compartment		
A/T clutch pressure control valve B	28	2	Right side of engine compartment		
Transmission range switch (A/T gear position switch)	15	10	Right side of engine compartment		
CKP sensor	4	2	Right side of engine compartment		
Countershaft speed sensor	16	2	Right side of engine compartment		
Coolant temperature gauge sending unit	41	1	Middle of engine compartment		
Engine coolant temperature (ECT) sensor	39	2	Middle of engine compartment		
Radiator fan switch B	45	2	Right side of engine compartment		
Exhaust gas recircuration (EGR) control solenoid valve	40	6	Middle of engine compartment		
Idle air control (IAC) valve	35	3	Right side of engine compartment		
Ignition coil	18	3	Right side of engine compartment		
Ignition control module (ICM)	14	3	Right side of engine compartment		
Intake air temperature (IAT) sensor	13	2	Middle of engine compartment		
Lock-up control solenoid valve and shift control solenoid valve A	32	3	Right side of engine compartment		
Mainshaft speed sensor	29	2	Right side of engine compartment		
MAP sensor	38	3	Right side of engine compartment		
No. 1 fuel injector	7	2	Middle of engine compartment		
No. 2 fuel injector	9	2	Middle of engine compartment		
No. 3 fuel injector	12	2	Middle of engine compartment		
No. 4 fuel injector	6	2	Middle of engine compartment		
No. 5 fuel injector	8	2	Middle of engine compartment		
No. 6 fuel injector	10	2	Middle of engine compartment		
Oil pressure switch	2	1	Right side of engine compartment		
PCM connector B	19	25	Under middle of dash		
PCM connector C	20	31	Under middle of dash		
PCM connector D	21	16	Under middle of dash		
Primary heated oxygen sensor (Primary HO2S)	11	4	Middle of engine compartment		
Radiator fan switch A	25	2	Right side of engine compartment		
Second clutch pressure switch	33	1	Right side of engine compartment		
Shift control solenoid valve B	36	2	Right side of engine compartment		
Shift control solenoid valve C	34	2	Right side of engine compartment		
Starter solenoid	31	1	Right side of engine compartment		
TDC sensor	44	4	Right side of engine compartment		
Third clutch pressure switch	30	1	Right side of engine compartment		
Throttle position (TP) sensor	37	3	Right side of engine compartment		
VTEC pressure switch	1	2	Right side of engine compartment		
VTEC solenoid valve	5	1	Right side of engine compartment		
C103	23	14	Right side of engine compartment	Left engine compartment wire harness (see page 22-14)	
C104	24	10	Right side of engine compartment	Left engine compartment wire harness (see page 22-14)	
C105 (Junction connector)	22	20	Right side of engine compartment		
C106 (Junction connector)	17	8	Right side of engine compartment		
T101	3		Under-hood fuse/relay box		
T102	43		Alternator		
G101	26		Right side of engine compartment	Engine ground via engine wire harness	

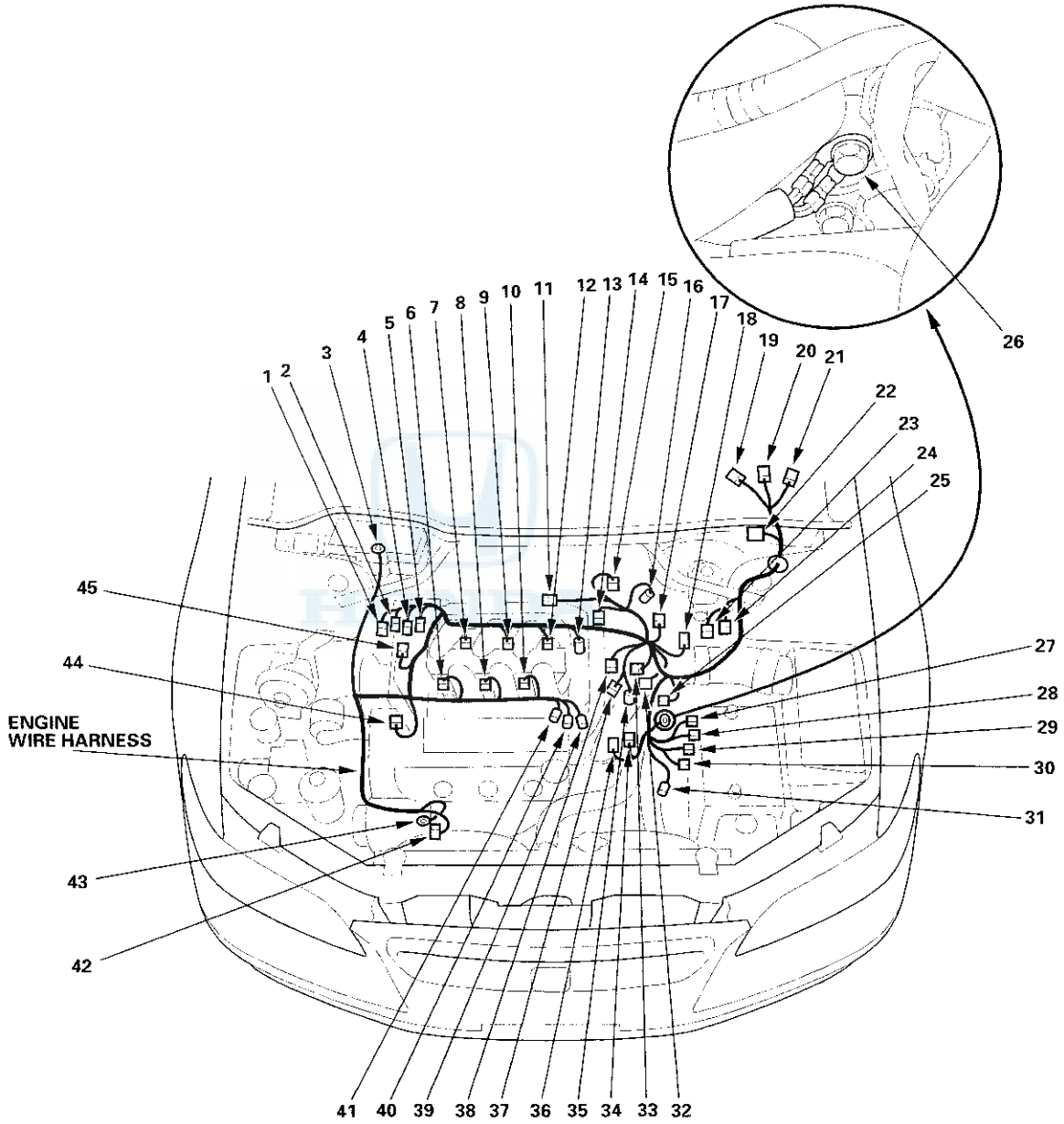
1
2
3
4
5
6
7
8
9
10
11
12
13
14
15
16
17
18
19
20
21
22
23
24
25
26
27
28
29
30
31
32
33
34
35
36
37
38
39
40
41
42
43
44
45
ENGINE
WIRE HARNESS

(cont'd)

Connector to Harness Index (cont'd)

Engine Wire Harness ('00-01 models)

Connector or Terminal	Ref	Cavities	Location	Connects to	Notes
Alternator	46	4	Right side of engine compartment		
A/T clutch pressure control valve A	28	2	Right side of engine compartment		
A/T clutch pressure control valve B	29	2	Right side of engine compartment		
Transmission range (TR) switch (A/T gear position switch)	15	10	Right side of engine compartment		
CKP sensor	4	2	Right side of engine compartment		
Countershaft speed sensor	16	2	Right side of engine compartment		
Engine coolant temperature (ECT) sensor	41	2	Middle of engine compartment		
Exhaust gas recircuration (EGR) control solenoid valve	40	6	Middle of engine compartment		
Idle air control (IAC) valve	36	3	Right side of engine compartment		
Intake air temperature (IAT) sensor	14	2	Middle of engine compartment		
Lock-up control solenoid valve and shift control solenoid valve A	33	3	Right side of engine compartment		
Mainshaft speed sensor	30	2	Right side of engine compartment		
MAP sensor	39	3	Right side of engine compartment		
No. 1 fuel injector	7	2	Middle of engine compartment		
No. 2 fuel injector	10	2	Middle of engine compartment		
No. 3 fuel injector	13	2	Middle of engine compartment		
No. 4 fuel injector	49	2	Middle of engine compartment		
No. 5 fuel injector	45	2	Middle of engine compartment		
No. 6 fuel injector	43	2	Middle of engine compartment		
No. 1 ignition coil	8	3	Middle of engine compartment		
No. 2 ignition coil	9	3	Middle of engine compartment		
No. 3 ignition coil	11	3	Middle of engine compartment		
No. 4 ignition coil	48	3	Middle of engine compartment		
No. 5 ignition coil	44	3	Middle of engine compartment		
No. 6 ignition coil	42	3	Middle of engine compartment		
Oil pressure switch	2	1	Right side of engine compartment		
PCM connector B	19	25	Under middle of dash		
PCM connector C	20	31	Under middle of dash		
PCM connector D	21	16	Under middle of dash		

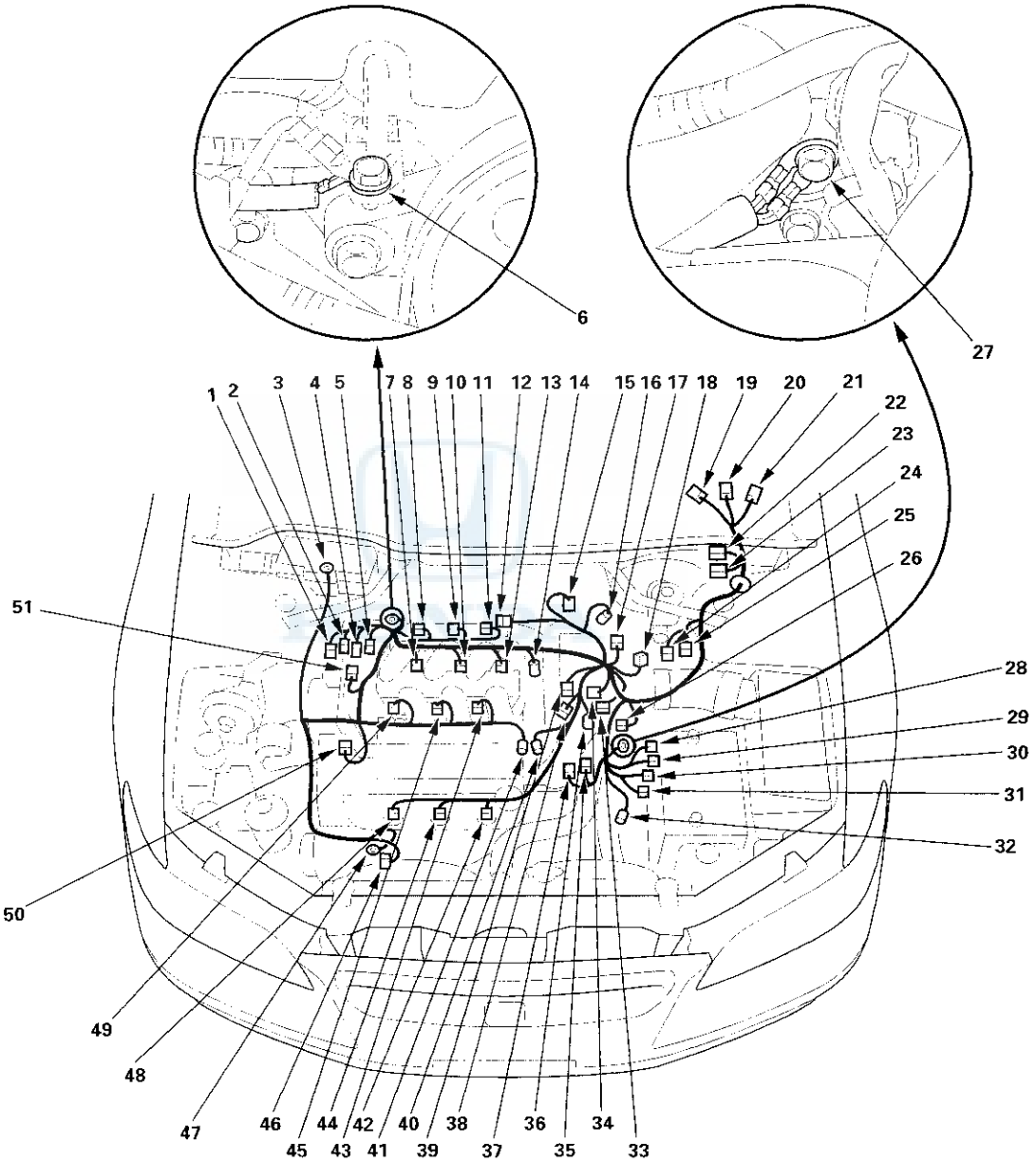
6
27
1 2 3 4 5 7 8 9 10 11 12 13 14 15 16 17 18 19 20 21
22
23
24
25
26
51
28
29
30
31
32
50
49
48
47
46 44 42 40 38 36 34
45 43 41 39 37 35 33

(cont'd)

Connector to Harness Index (cont'd)

Engine Wire Harness ('00-01 models) (cont'd)

Connector or Terminal	Ref	Cavities	Location	Connects to	Notes
Primary HO2S	12	4	Middle of engine compartment		
Radiator fan switch A	26	2	Right side of engine compartment		
Radiator fan switch B	51	2	Right side of engine compartment		
Secondary clutch switch pressure switch	34	1	Right side of engine compartment		
Shift control solenoid valve B	37	2	Right side of engine compartment		
Shift control solenoid valve C	35	2	Right side of engine compartment		
Starter solenoid	32	1	Right side of engine compartment		
TDC sensor	50	4	Right side of engine compartment		
Third clutch pressure switch	31	1	Right side of engine compartment		
Throttle position (TP) sensor	38	3	Right side of engine compartment		
VTEC pressure switch	1	2	Right side of engine compartment		
VTEC solenoid valve	5	1	Right side of engine compartment		
C103	24	14	Right side of engine compartment	Left engine compartment wire harness (see page 22-14)	
C104	25	10	Right side of engine compartment	Left engine compartment wire harness (see page 22-14)	
C105 (Junction connector)	22	20	Right side of engine compartment		
C106 (Junction connector)	17	8	Right side of engine compartment		
C107 (Junction connector)	18	14	Right side of engine compartment		
C108 (Junction connector)	23	20	Right side of engine compartment		
T101	3		Under-hood fuse/relay box		
T102	47		Alternator		
G101	27		Right side of engine compartment	Body ground via engine wire harness	
G102	6		Middle of engine compartment	Body ground via engine wire harness	

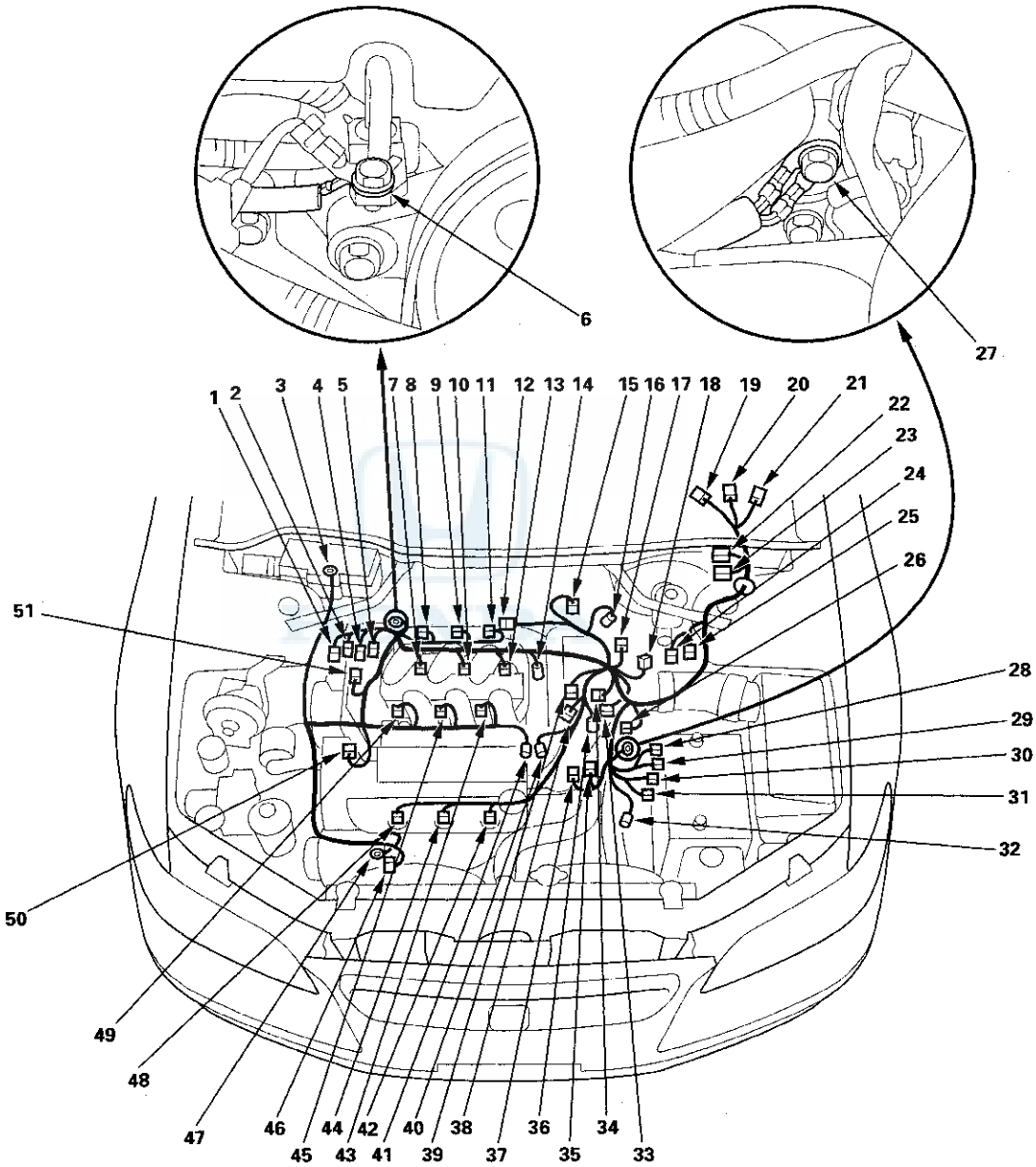
6
27
1
2
3
4
5
7
8
9
10
11
12
13
14
15
16
17
18
19
20
21
22
23
24
25
26
28
29
30
31
32
33
34
35
36
37
38
39
40
41
42
43
44
45
46
47
48
49
50
51

Connector to Harness Index (cont'd)

Right Engine Compartment Wire Harness

Connector or Terminal	Ref	Cavities	Location	Connects to	Notes
ABS control unit connector A	1	12	Behind right kick panel		* 1
ABS control unit connector B	2	22	Behind right kick panel		* 1
ABS fail-safe relay	6	4	Right side of engine compartment		* 1
ABS modulator unit	22	10	Right side of engine compartment		* 1
ABS pump motor	23	2	Right side of engine compartment		
ABS pump motor relay	5	4	Right side of engine compartment		
ABS right front wheel sensor	20	2	Right side of engine compartment		
ABS/TCS control unit connector A	45	26	Behind right kick panel		* 2
ABS/TCS control unit connector B	1	16	Behind right kick panel		* 2
ABS/TCS control unit connector C	2	12	Behind right kick panel		* 2
ABS/TCS modulator unit	22	23	Right side of engine compartment		* 2
A/C compressor clutch	31	1	Right side of engine compartment		
A/C pressure switch	25	2	Behind condenser fan motor		
Condenser fan motor	30	2	Middle of engine compartment		
Cruise control actuator	21	4	Right side of engine compartment		
Diode (Lighting)	40	2	Behind right kick panel		Canada
ELD unit	12	3	Inside under-hood fuse/relay box		
High beam cut relay	42	4	Behind right kick panel		Canada
Left horn	26	1	Behind middle of front bumper		
Outside air temperature sensor	28	2	Behind middle of front bumper		
Passenger's under-dash fuse/relay box connector D (see page 22-25)	4	3	Behind right kick panel		
Passenger's under-dash fuse/relay box connector C (see page 22-25)	3	18	Behind right kick panel		
Power steering pressure (PSP) switch	19	2	Middle of engine compartment		
Radiator fan motor	24	2	Middle of engine compartment		
Right front parking light	33	2	Behind right headlight		
Right front side marker light	39	3	Behind right of front bumper		
Right headlight (High beam)	32	2	Behind right headlight		
Right headlight (Low beam)	34	2	Behind right headlight		
Right horn	29	1	Behind middle of front bumper		
Seat heater relay	7	4	Right side of engine compartment		* 1
Secondary heated oxygen sensor (Secondary HO2S)	18	4	Right side of engine compartment		
Security hood switch	27	2	Behind middle of front bumper		
Taillight relay	41	4	Behind right kick panel		
TCS relay	7	4	Right side of engine compartment		* 2
Under-hood fuse/relay box connector D (see page 22-23)	8	16	Right side of engine compartment		
Under-hood fuse/relay box connector C (see page 22-23)	9	3	Right side of engine compartment		
Under-hood fuse/relay box connector B (see page 22-23)	10	7	Right side of engine compartment		
Under-hood fuse/relay box connector A (see page 22-23)	11	18	Right side of engine compartment		
Washer level switch	38	2	Behind right of front bumper		Canada
Windshild washer motor	37	2	Behind right of front bumper		
C201	13	16	Under right side of dash	Dashboard wire harness B (see page 22-16)	
C202	14	7	Under right side of dash	Dashboard wire harness B (see page 22-16)	
C203	15	5	Under right side of dash	Dashboard wire harness B (see page 22-16)	
C204	16	22	Under right side of dash	Dashboard wire harness A (see page 22-18)	
G201	35		Right side of engine compartment	Body ground Via right engine compartment wire harness	
G202	17		Right side of engine compartment	Body ground Via right engine compartment wire harness	
G203	36		Right side of engine compartment	Body ground Via right engine compartment wire harness	
G204	43		Behind right kick panel	Body ground Via right engine compartment wire harness	
G205	44		Behind right kick panel	Body ground Via right engine compartment wire harness	

* 1: '98-00 models
* 2: '01 model

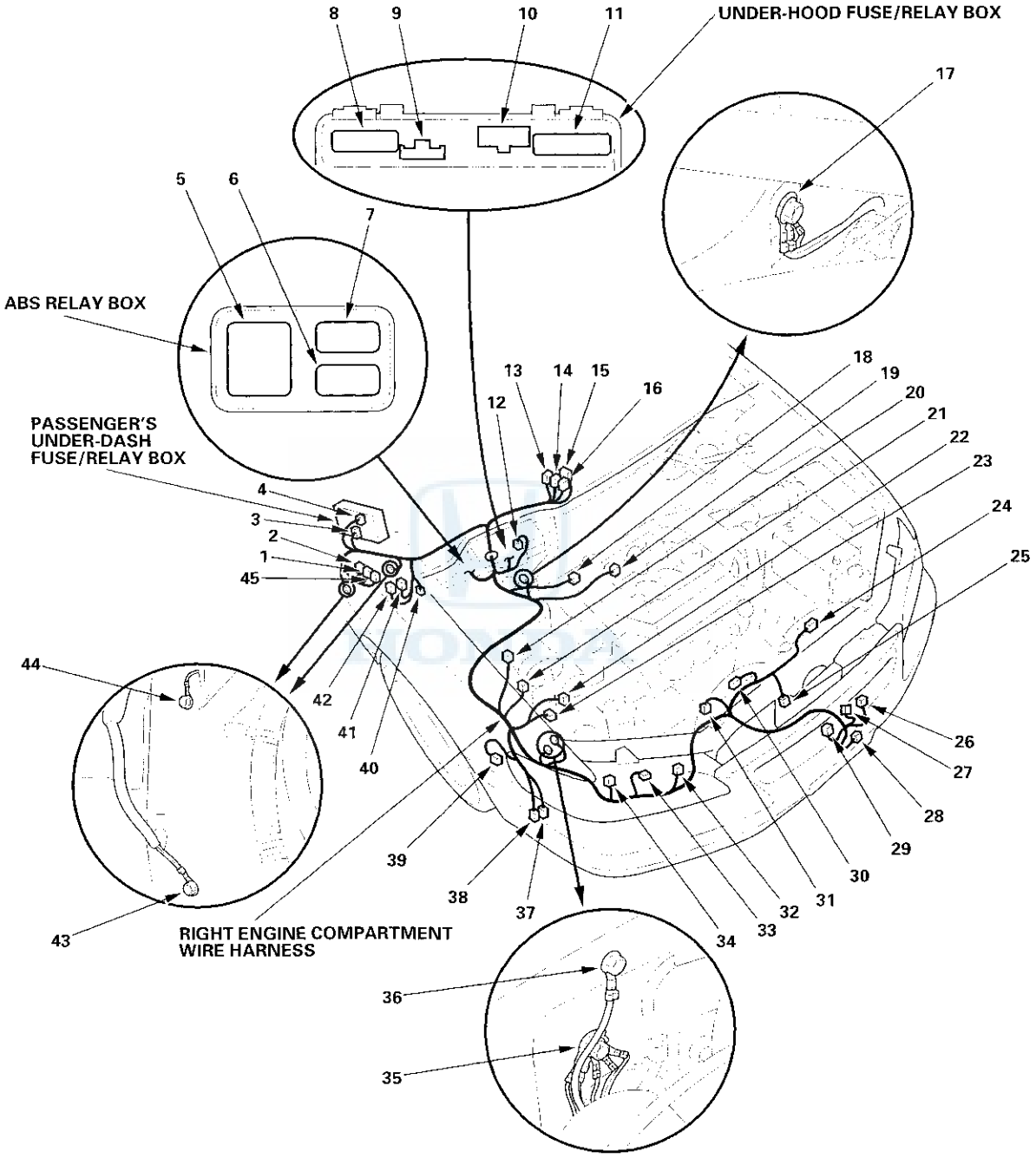
UNDER-HOOD FUSE/RELAY BOX
ABS RELAY BOX
PASSENGER'S UNDER-DASH FUSE/RELAY BOX
RIGHT ENGINE COMPARTMENT WIRE HARNESS
1
2
3
4
5
6
7
8
9
10
11
12
13
14
15
16
17
18
19
20
21
22
23
24
25
26
27
28
29
30
31
32
33
34
35
36
37
38
39
40
41
42
43
44
45

Connector to Harness Index (cont'd)

Left Engine Compartment Wire Harness

Connector or Terminal	Ref	Cavities	Location	Connects to	Notes
ABS left front wheel sensor	16	2	Left side of engine compartment		
Brake fluid level switch connector A (--)	6	1	Left side of engine compartment		
Brake fluid level switch connector B (--)	7	1	Left side of engine compartment		
Driver's under-dash fuse/relay box connector E (see page 22-24)	12	20	Behind left kick panel		
Driver's under-dash fuse/relay box connector C (see page 22-24)	11	5	Behind left kick panel		
Engine mount control solenoid valve	4	2	Left side of engine compartment		
EVAP purge control solenoid valve	3	2	Left side of engine compartment		
Intermittent wiper relay	13	6	Left side of engine compartment		
Left front parking light	20	2	Behind left headlight		
Left front side marker light	17	3	Behind left of front bumper		
Left headlight (High beam)	21	2	Behind left headlight		
Left headlight (Low beam)	19	2	Behind left headlight		
Seat heater relay	13	4	Behind left kick panel		*
Test tachometer connector	1	2	Left side of engine compartment		
Windshield wiper motor	8	5	Left rear of engine compartment		
C103	2	14	Left side of engine compartment	Engine wire harness (see page 22-6)	
C104	15	10	Left side of engine compartment	Engine wire harness (see page 22-6)	
C301	9	20	Under left side of dash	Dashboard wire harness B (see page 22-16)	
C302	10	16	Under left side of dash	Dashboard wire harness A (see page 22-18)	
G301	18		Left side of engine compartment	Body ground via left engine compartment wire harness	
G302	5		Left side of engine compartment	Body ground via left engine compartment wire harness	

*: '01 model

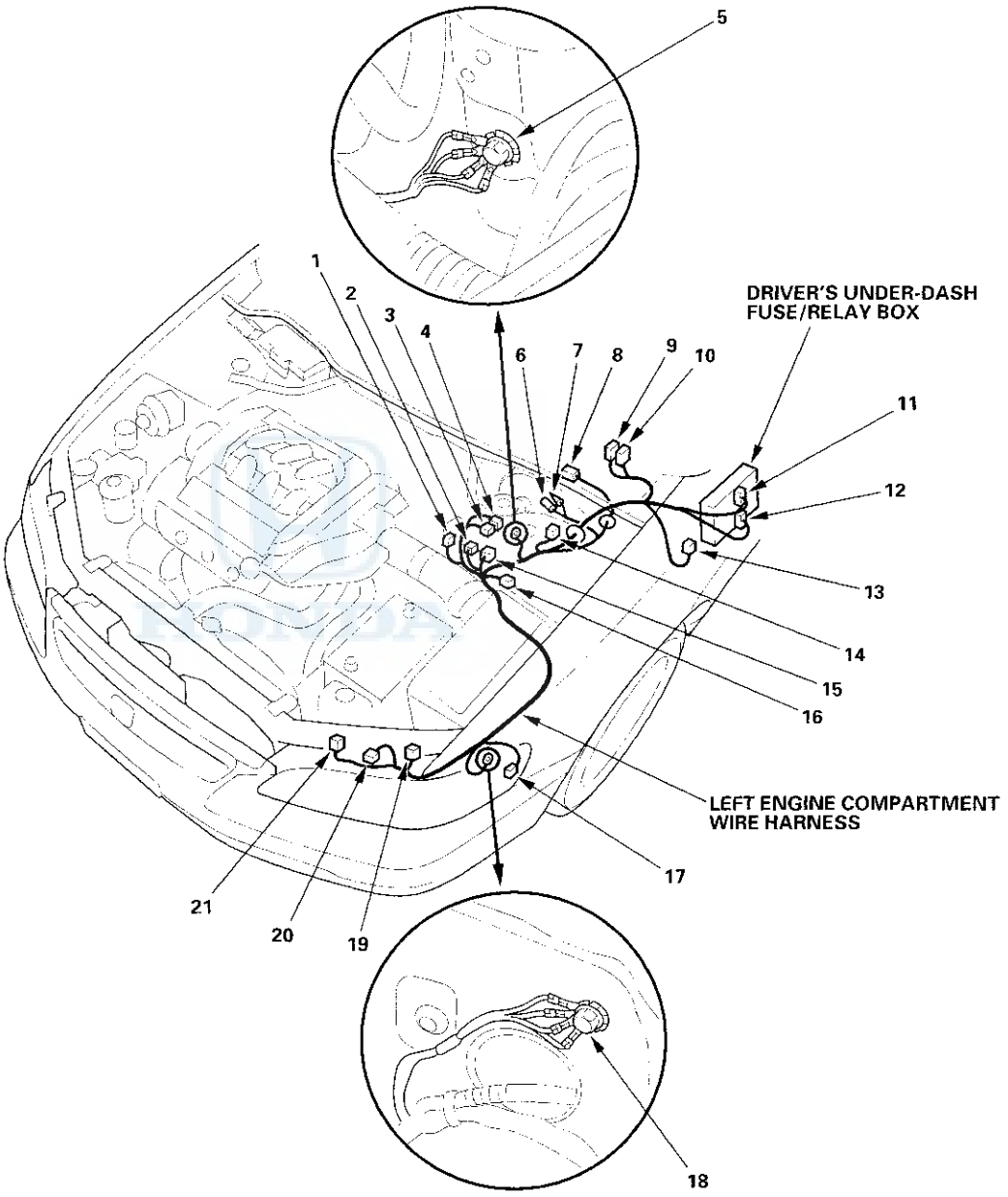
5
1
2
3
4
6
7
8
9
10
DRIVER'S UNDER-DASH
FUSE/RELAY BOX
11
12
13
14
15
16
LEFT ENGINE COMPARTMENT
WIRE HARNESS
17
21
20
19
18

Connector to Harness Index (cont'd)

Dashboard Wire Harness B (Left Branch)

Connector or Terminal	Ref	Cavities	Location	Connects to	Notes
Brake switch	5	4	Under left side of dash		
Cable reel	13	4	Under left side of dash		
Combinaion light switch	12	14	Under left side of dash		
Data link connector (DLC)	16	16	Under left side of dash		
Daytime running lights control unit	14	14	Under left side of dash		
Driver's under-dash fuse/relay box connector O (see page 22-24)	1	20	Behind left kick panel		
Driver's under-dash fuse/relay box connector P (see page 22-24)	3	7	Behind left kick panel		
Driver's under-dash fuse/relay box connector Q (see page 22-24)	2	22	Behind left kick panel		
Ignition switch	11	7	Under left side of dash		
Immobilizer control unit	10	5	Under left side of dash		
Intermittent dwell time controller	8	2	Under left side of dash		
PGM-FI main relay	7	7	Under left side of dash		
Windshield wiper/washer switch	9	8	In steering column covers		
C301	6	20	Under left side of dash	Left engine compartment wire harness (see page 22-14)	
C401	15	22	Under left side of dash	Dashboard wire harness A (see page 22-18)	
C402	4	8	Under left side of dash	Security system wire harness (Optional)	Canada
C402	4	4	Under left side of dash	Security system wire harness (Optional)	USA
G401	17		Behind left kick panel	Body ground via dashboard wire harness B	

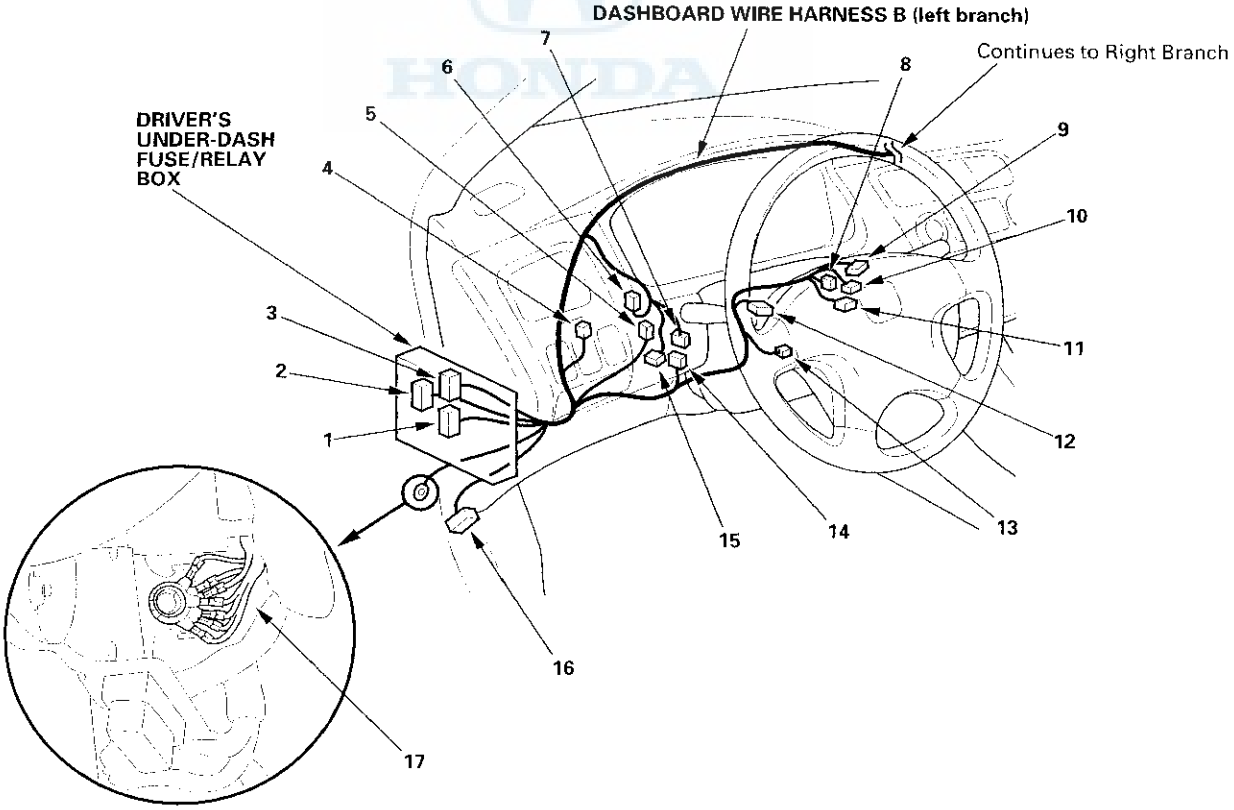

Dashboard Wire Harness B (Right Branch)

Connector or Terminal	Ref	Cavities	Location	Connects to	Notes
Air mix control motor	15	7	Under right side of dash		
Blower motor	12	2	Under right side of dash		
Blower motor high relay	11	4	Under right side of dash		AUTO A/C
Climate control unit connector A	3	20	Under middle of dash		AUTO A/C
Climate control unit connector B	1	8	Under middle of dash		AUTO A/C
Evaporator temperature sensor	4	2	Under middle of dash		
Heater control panel	3	22	Under middle of dash		MAN. A/C
Heater fan switch	1	7	Under middle of dash		MAN. A/C
Mode control motor	2	7	Under middle of dash		
Passenger's under-dash fuse/relay box connector J (see page 22-25)	8	16	Behind right kick panel		
Passenger's under-dash fuse/relay box connector K (see page 22-25)	9	16	Behind right kick panel		
Power transistor	10	4	Under right side of dash		AUTO A/C
Radiator fan control module	16	8	Under middle of dash		
Recirculation control motor	5	7	Under middle of dash		
C201	6	16	Under right side of dash	Right engine compartment wire harness (see page 22-12)	
C202	14	7	Under right side of dash	Right engine compartment wire harness (see page 22-12)	
C203	13	5	Under right side of dash	Right engine compartment wire harness (see page 22-12)	
C403	7	2	Under right side of dash	Security system wire harness (Optional)	

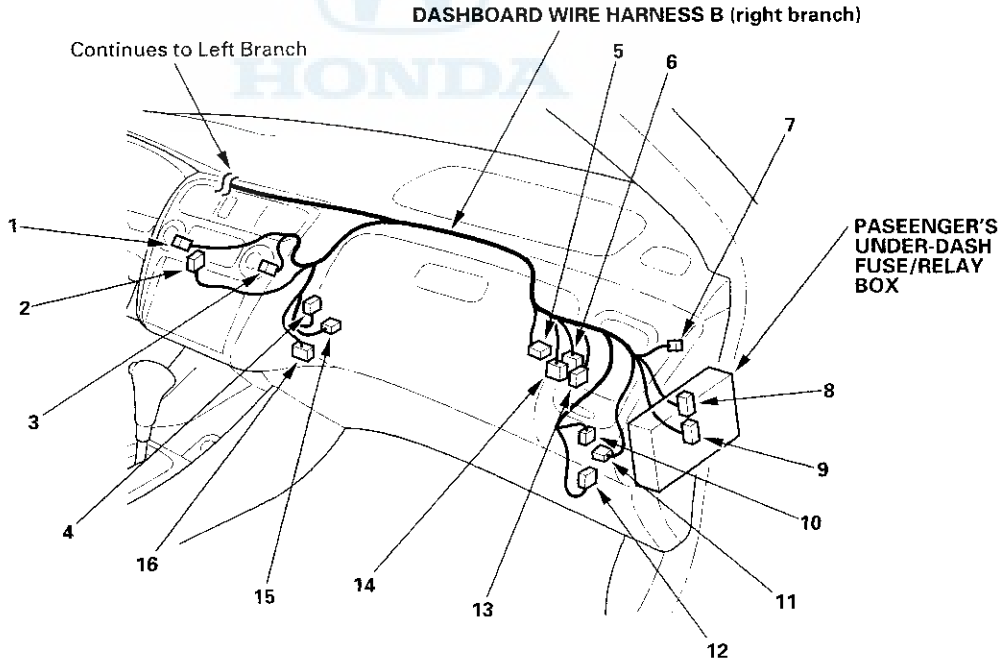

Connector to Harness Index (cont'd)

Dashboard Wire Harness A

Connector or Terminal	Ref	Cavities	Location	Connects to	Notes
Accessory socket	29	2	Behind middle of dash		
A/T gear position console light/parking pin switch	32	4	Middle of floor between front seats		
Audio unit	17	20	Behind audio unit		
Clock	16	5	Behind middle of dash		
Cruise control unit	37	14	Behind left side of dash		
Cruise main switch	7	5	Behind instrument panel		* 1
Cruise main /TCS switch	7	8	Behind instrument panel		* 2
Driver's seat heater switch	31	6	Behind middle of dash		
Driver's under-dash fuse/relay box connector I (see page 22-24)	2	18	Behind left kick panel		
Driver's under-dash fuse/relay box connector K (see page 22-24)	3	18	Behind left kick panel		
Gauge assembly connector A	11	14	Behind gauges		
Gauge assembly connector B	10	22	Behind gauges		
Gauge assembly connector C	12	16	Behind gauges		
Glove box light	27	2	Behind glove box		
Hazard warning switch	14	10	Behind middle of dash		
In-car temperature sensor	38	2	Behind left side of dash		
Left tweeter	9	2	Behind instrument panel		
Moonroof switch	8	6	Behind instrument panel		
Multiplex control unit (driver's) connector B	5	22	Behind left kick panel		
Multiplex control unit (passenger's) connector B	23	22	Behind right kick panel		
Parking brake switch	36	1	Middle of floor between front seats		
Passenger's seat heater switch	30	6	Behind middle of dash		
Passenger's under-dash fuse/relay box connector H (see page 22-25)	21	18	Behind right kick panel		
Passenger's under-dash fuse/relay box connector I (see page 22-25)	22	18	Behind right kick panel		
PCM connector A	28	32	Behind middle of dash		
Right tweeter	20	2	Behind instrument panel		
Shift lock solenoid	34	2	Middle of floor between front seats		
Sunlight sensor	15	2	Behind middle of dash		
SRS memory erase signal (MES)	4	2	Behind left kick panel		* 2
SRS unit	33	8	Middle of floor		* 3
C204	26	22	Behind right side of dash	Right engine compartment wire harness (see page 22-12)	
C302	39	16	Behind left side of dash	Left engine compartment wire harness (see page 22-14)	
C401	40	22	Behind left side of dash	Dashboard wire harness B (see page 22-16)	
C501	42	18	Behind left kick panel	Left side wire hareness, refer to the '98-01 Accord Service Manual (see page 22-24)	
C502	6	7	Behind instrument panel	Moonroof wire harness, refer to the '98-01 Accord Service Manual (see page 22-30)	
C503	13	3	Under middle of dash	SRS main harness, refer to the '98-01 Accord Service Manual (see page 22-39)	* 1
C503	13	2	Under middle of dash	SRS main harness, refer to the '98-01 Accord Service Manual (see page 22-39)	'00 Sedan
C503	13	8	Under middle of dash	SRS main harness, refer to the '98-01 Accord Service Manual (see page 22-39)	'00 Coupe
C504	41	2	Behind left kick panel	Security system wire harness (Optional)	USA
C505	35	6	Middle of floor	SRS floor harness, refer to the '98-01 Accord Service Manual (see page 22-39)	'00 Sedan with side airbags
C582	25	16	Behind right side of dash	Right side wire harness (see page 22-21)	'00 Coupe

Connector or Terminal	Ref	Cavities	Location	Connects to	Notes
C582	25	6	Behind right side of dash	Right side wire harness (see page 22-20)	* 2
G501	18		Under middle of dash	Body ground via dashboard wire harness A	
G502	19		Under middle of dash	Body ground via dashboard wire harness A	
G503	1		Behind left kick panel	Body ground via dashboard wire harness A	
G504	24		Behind right kick panel	Body ground via dashboard wire harness A	

* 1: '98-00 models
* 2: '01 model
* 3: '00-01 Sedan, '01 Coupe

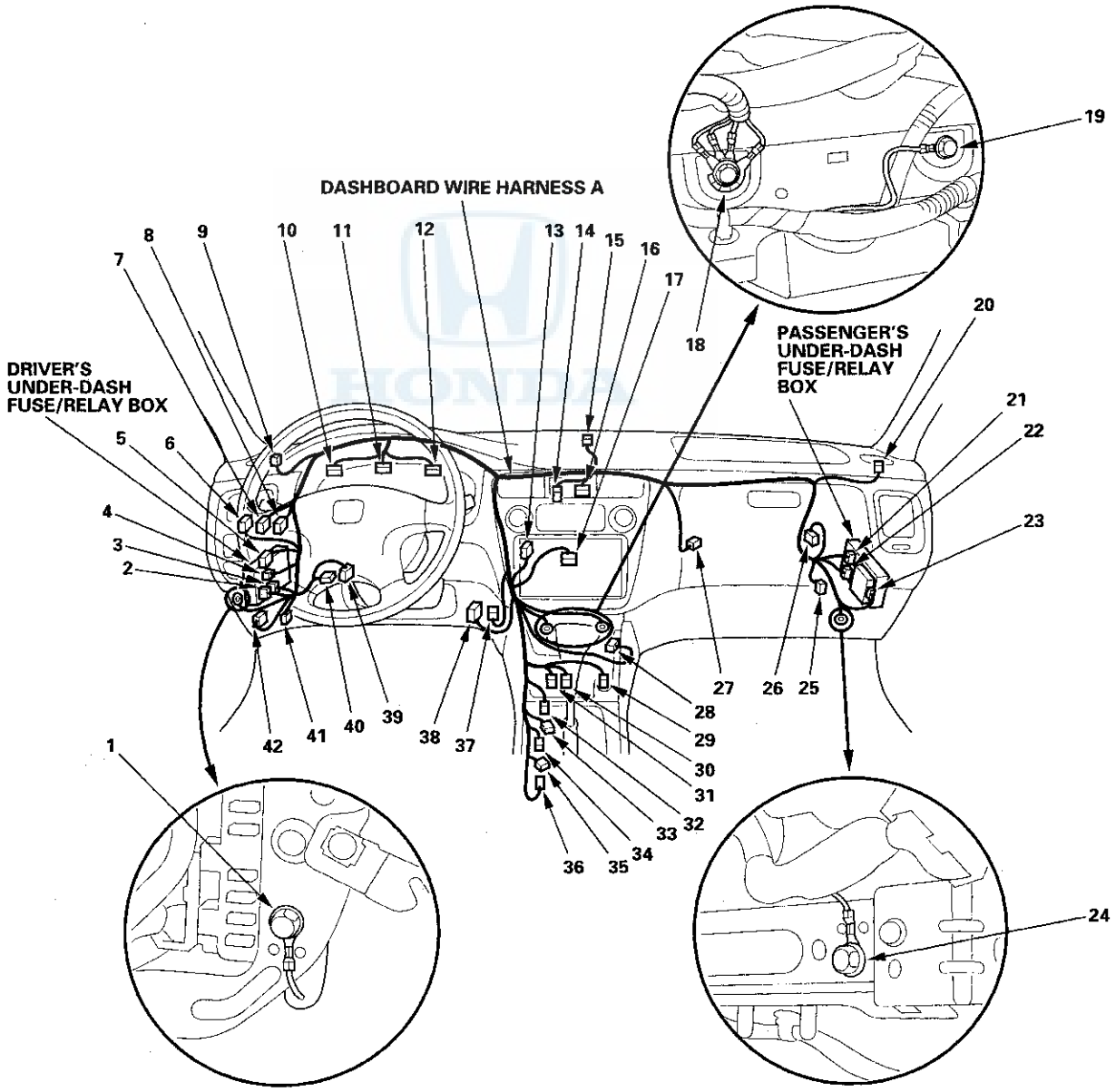

Connector to Harness Index (cont'd)

Right Side Wire Harness (Sedan)

Connector or Terminal	Ref	Cavities	Location	Connects to	Notes
ABS right rear wheel sensor	16	2	Under right side of rear seat		
Front passenger's side airbag inflator	2	2	Under passenger's seat		* 4
Passenger's door switch	13	1	Right B-pillar		
Passenger's seat belt switch	4	3	Under passenger's seat		* 1
Passenger's seat heater	3	3	Under passenger's seat		* 2
Passenger's seat heater	3	4	Under passenger's seat		* 3
Passenger's side impact sensor	11	2	Under passenger's seat		* 4
Passenger's under-dash fuse/relay box connector A (see page 22-25)	7	20	Behind right kick panel		
Passenger's under-dash fuse/relay box connector G (see page 22-25)	8	3	Behind right kick panel		Canada
Right rear door switch	15	1	Right quarter panel		
Right rear speaker	17	2	Right quarter panel		
Right side seat belt tensioner	14	2	Right B-pillar		* 4
Window antenna coil connector A	18	1	Middle of rear shelf		
C581	1	10	Right side of floor	Right rear door wire harness, refer to the '98-01 Accord Service Manual (see page 22-37)	
G582	9	6	Behind right kick panel	Dashboard wire harness A , refer to the '98-01 Accord Service Manual (see page 22-18)	* 4
G583	5	4		SRS main harness , refer to the '98-01 Accord Service Manual (see page 22-39)	* 4
G584	6	4		SRS main harness , refer to the '98-01 Accord Service Manual (see page 22-39)	* 4
C701	3	10	Under passenger's seat	Passenger's seat wire harness (see page 22-22).	* 2
G851	12	4		OPDS wire harness, refer to the '98-01 Accord Service Manual (see page 22-42)	* 4
G581	10		Under passenger's seat	Body ground via right side wire harness	

* 1: '00 model without seat heater
* 2: '98-99 model
* 3: '00 model with seat heater
* 4: '01 model

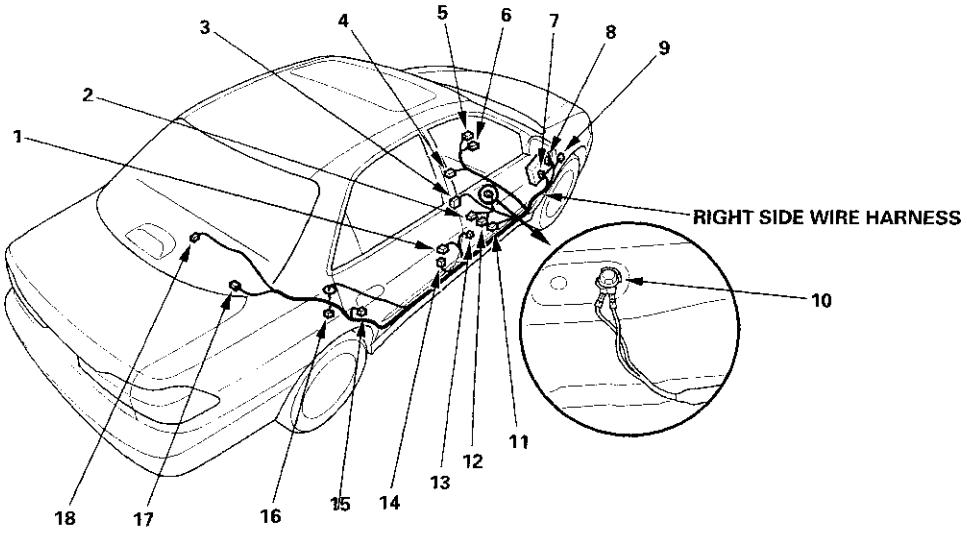

Right Side Wire Harness (Coupe)

Connector or Terminal	Ref	Cavities	Location	Connects to	Notes
ABS right rear wheel sensor	16	2	Under right side of rear seat		
Passenger's door switch	13	1	Right B-pillar		
Passenger's seat belt switch	12	3	Under passenger's seat		* 1
Passenger's seat heater	10	3	Under passenger's seat		* 2
Passenger's seat heater	10	4	Under passenger's seat		* 3
Passenger's side airbag inflator	15	2	Under passenger's seat		* 5
Passenger's side impact sensor	14	2	Under passenger's seat		
Passenger's under-dash fuse/relay box connector A (see page 22-25)	5	20	Behind right kick panel		
Passenger's under-dash fuse/relay box connector G (see page 22-25)	6	3	Behind right kick panel		Canada
Right rear speaker	17	2	Right quarter panel		
Window antenna coil connector A	18	1	Middle of rear shelf		
C582	7	16	Behind right kick panel	Dashboard wire harnessA (see page 22-18)	* 4
C582	7	6	Behind right kick panel	Dashboard wire harnessA (see page 22-22)	* 5
C583	2	4		SRS main harness, refer to the '98-01 Accord Service Manual (see page 22-39)	* 6
C584	3	4		SRS main harness, refer to the '98-01 Accord Service Manual (see page 22-39)	* 6
C585 (Connects to C586)	4	1	Under passenger's seat		* 6
C586 (Connects to C585)	8	1	Under passenger's seat		* 6
C851	11	4		OPDS wire harness, refer to the '98-01 Accord Service Manual (see page 22-42)	* 6
G581	1		Under passenger's seat	Body ground via right side wire harness	

* 1: '00-01 model without seat heater
* 2: '98-99 models
* 3: '00-01 model with seat heater
* 4: '00 model
* 5: '01 model
* 6: '00-01 models

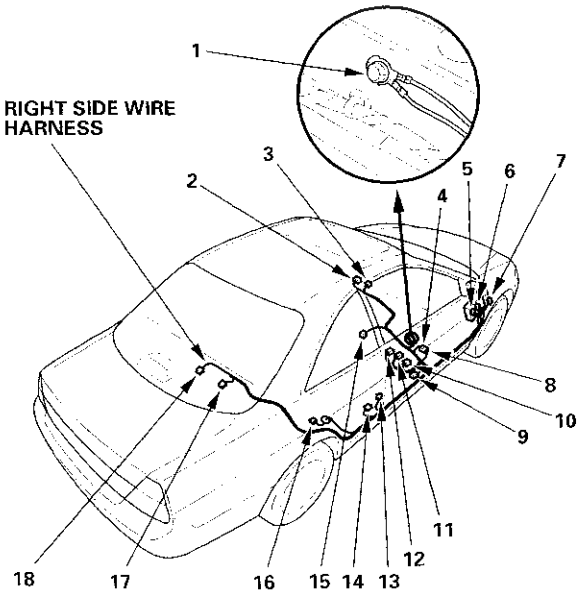

Connector to Harness Index (cont'd)

Passenger's Seat Wire Harness (4-way Adjustable) ('01 model)

Connector or Terminal	Ref	Cavities	Location	Connects to	Notes
Passenger's power seat adjustment switch connector A	4	6	Right side of passenger's seat		
Passenger's power seat adjustment switch connector B	2	6	Right side of passenger's seat		
Passenger's seat belt switch	7	3	Under passenger's seat		
Passenger's seat heater	5	4	Under passenger's seat		
Recline motor	1	2	Under passenger's seat		
Slide motor	6	2	Under passenger's seat		
C701	3	10	Right side of passenger's seat	Right side wire harness (see page 22-20)	

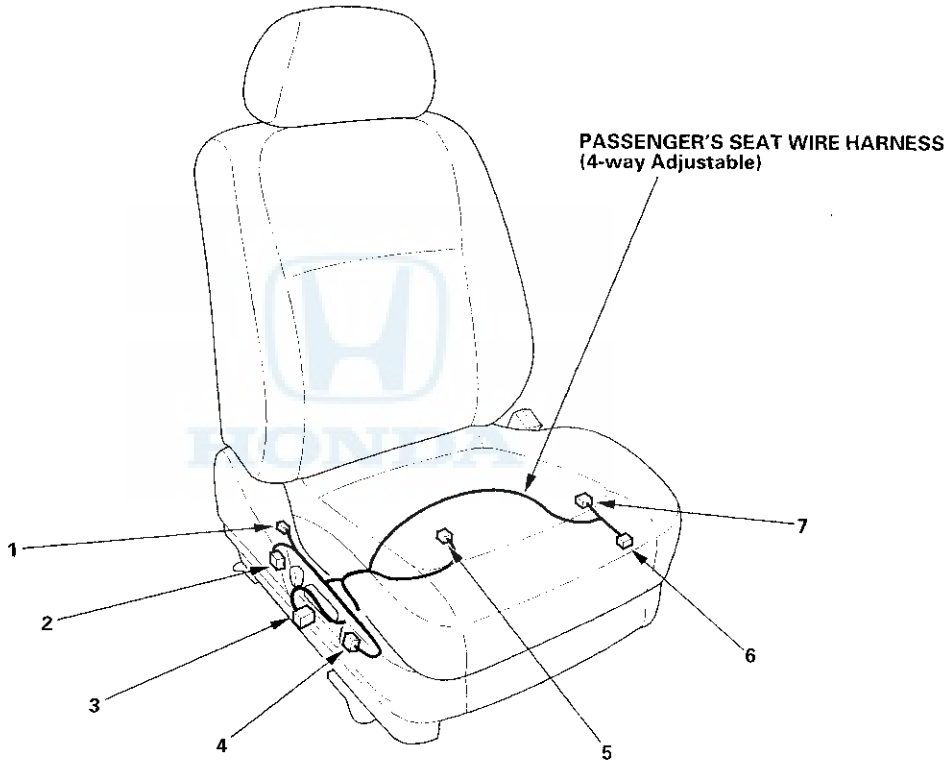

Connector to Fuse/Relay Box Index

Under-hood Fuse/Relay Box

Socket	Ref	Terminal	Connects to
A	15	18	Right engine compartment wire harness (see page 22-12)
A/C compressor clutch relay	3	4	
B	14	7	Right engine compartment wire harness (see page 22-12)
Blower motor relay	11	4	
C	13	3	Right engine compartment wire harness (see page 22-12)
Condenser fan relay	1	4	
D	12	16	Right engine compartment wire harness (see page 22-12)
Diode	9	2	Not used
ELD unit	4	3	
Horn relay	10	4	
Headlight relay 1	7	4	
Headlight relay 2	8	4	
Radiator fan relay	2	4	
T1	6		Battery positive cable (see page 22-5)
T101	5		Engine wire harness (see page 22-6)

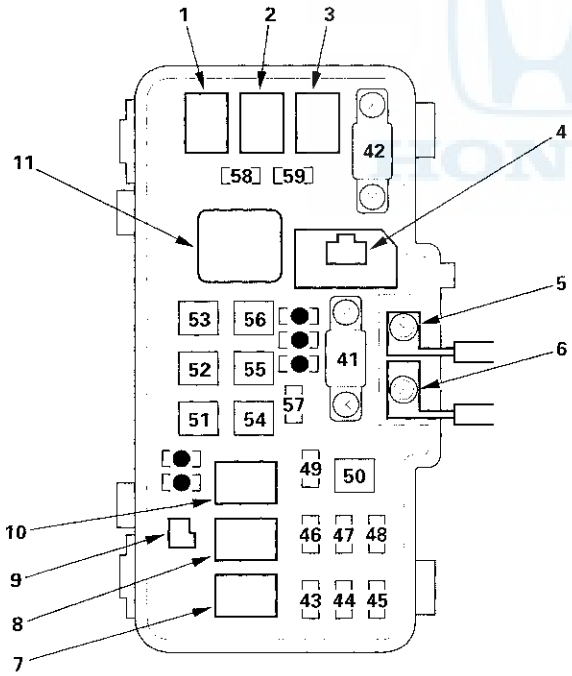

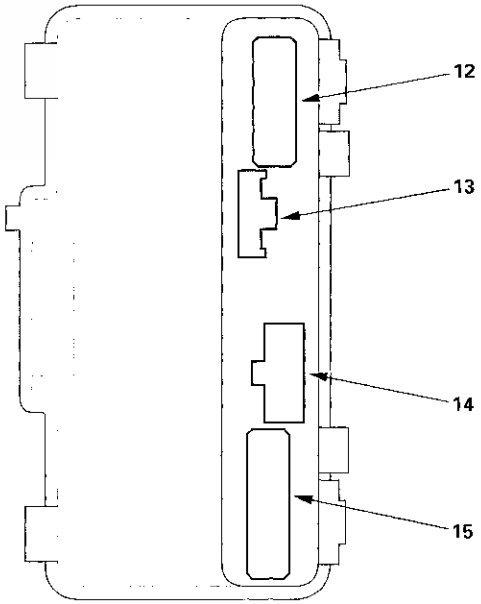

Connector to Fuse/Relay Box Index (cont'd)

Driver's Under-dash Fuse/Relay Box

Socket	Ref	Terminal	Connects to
A	11	10	Left side wire harness, refer to the '98-01 Accord Service Manual (see page 22-24)
B	3	14	Left side wire harness, refer to the '98-01 Accord Service Manual (see page 22-24)
C	10	5	Left engine compartment wire harness (see page 22-14)
D	7	——	Not used
Diode	1	——	
Diode	2	——	
E	4	20	Left engine compartment wire harness (see page 22-14)
F	9	6	Driver's door wire harness, refer to the '98-01 Accord Service Manual (see page 22-32)
G	8	18	Driver's door wire harness, refer to the '98-01 Accord Service Manual (see page 22-32)
H	5	6	No used
I	13	18	Dashboard wire harness A (see page 22-18)
J	12	2	Service check connector
K	14	18	Dashboard wire harness A (see page 22-18)
L	23	——	Not used
M	15	6	Ignition switch harness, refer to the '98-01 Accord Service Manual (see page 22-38)
Multiplex control unit connector A	6	24	(Plugs directly into the fuse box)
N	22	2	SRS wire harness, refer to the '98-01 Accord Service Manual (see page 22-39)
O	21	20	Dashboard wire harness B (see page 22-16)
P	16	7	Dashboard wire harness B (see page 22-16)
Q	17	22	Dashboard wire harness B (see page 22-16)
R	26	1	Optional connector
Reverse relay	19	4	
S	27	1	Optional connector
Starter cut relay	18	4	
T	24	1	Optional connector
Turn signal/hazard relay	20	4	
U	25	1	Optional connector

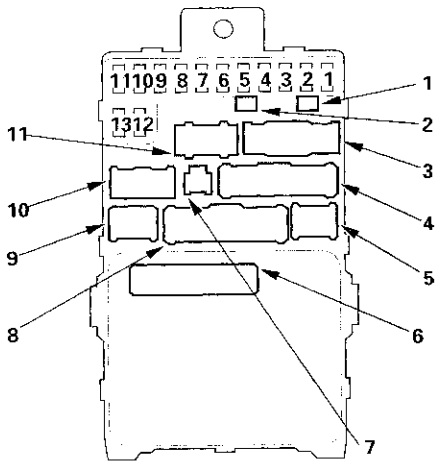

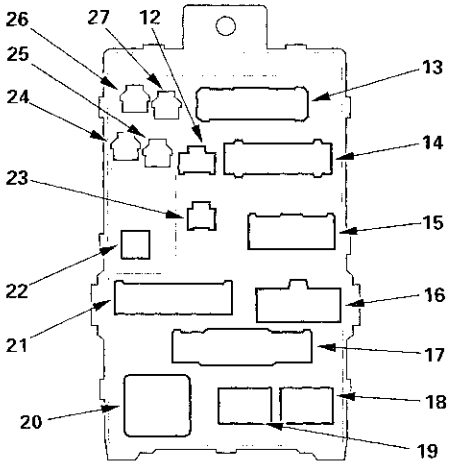

Passenger's Under-dash Fuse/Relay Box

Socket	Ref	Terminal	Connects to
A	10	20	Right side wire harness (see page 22-20)
Accessory relay	15	4	
B	4	4	Roof wire harness (see page 22-20)
C	9	18	Right engine compartment wire harness (see page 22-12)
D	5	3	Right engine compartment wire harness (see page 22-12)
Diode	1	———	Not used
Diode	2	- - - -	
Diode	3	— - - -	
E	8	2	Passenger's door wire harness, refer to the '98-01 Accord Service Manual (see page 22-34)
F	7	20	Passenger's door wire harness, refer to the '98-01 Accord Service Manual (see page 22-34)
G	6	3	Right side wire harness (see page 22-20)
H	18	18	Dashboard wire harness A (see page 22-18)
I	12	18	Dashboard wire harness A (see page 22-18)
J	17	16	Dashboard wire harness B (see page 22-16)
K	13	16	Dashboard wire harness B (see page 22-16)
Multiplex control unit connector A	11	24	(Plugs directly into the fuse box)
Power window relay	14	4	
Rear window defogger relay	16	4	

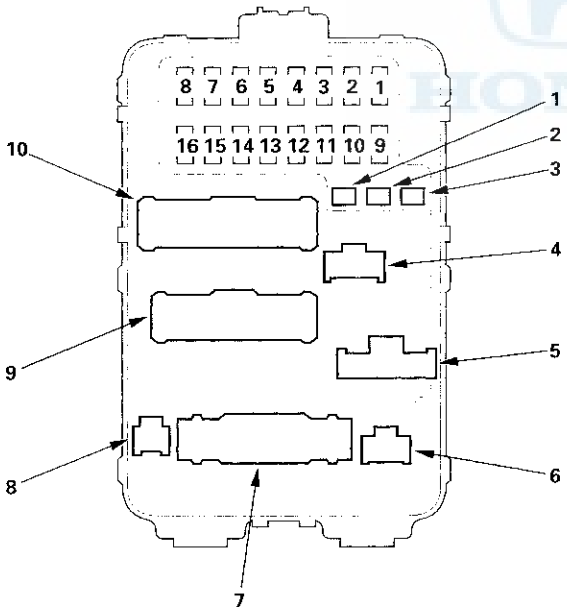

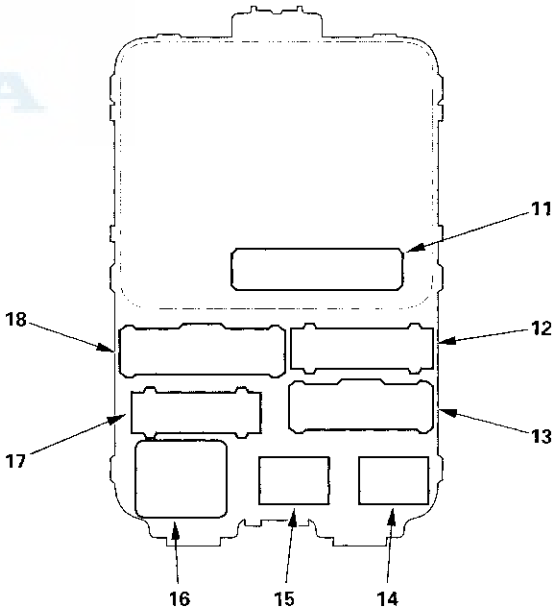

Power Distribution

Fuse to Components Index

Under-hood Fuse/Relay Box

Fuse Number	Amps	Wire color	Component(s) or Circuit(s) Protected
41	100A	—	Battery, Power distribution
42	50A	WHT	Ignition switch (BAT)
43	20A	RED/GRN	Right headlight, Daytime running lights control unit (Canada)
44	—	—	Not used
45	20A	RED/YEL	Left headlight, Daytime running lights control unit (Canada) Hight beam indicator, Hight beam cut relay
46	15A	WHT/GRN	PGM-FI main relay, Data link connector (DLC)
47	20A	WHT/YEL	Ignition key light and key interlock solenoid, ABS control unit (BLS) Cruise control unit, PCM, Horn relay High mount brake light, Brake failure sensor, Trailer lighting connector
		Fuse/relay box socket	Multiplex control unit (driver's)
48	20A	WHT/GRN	ABS front and rear solenoids
49	15A	WHT/GRN	Turn signal/hazard relay
50	30A	WHT	ABS pump motor
51	40A	WHT/BLU	No. 1, 7, 8, 15 and 16 fuses (in passenger's under-dash fuse/relay box)
52	20A	BLU	TCS relay
53	40A	WHT/GRN	Rear window defogger relay
54	40A	YEL	No. 9, 10, 11, 12 and 13 fuses (in passenger's under-dash fuse/relay box)
55	40A	YEL/GRN	No. 2, 4, 5 and 6 fuses (in passenger's under-dash fuse/relay box)
56	40A	YEL/BLK	Blower motor
57	20A	BLU/BLK	Radiator fan motor
58	20A	BLU/YEL	Condenser fan motor
		WHT	Fan control module (Radiator fan control module)
		RED	A/C compressor clutch
59	20A	WHT/GRN	Driver's and front passenger's seat heaters (Canada)

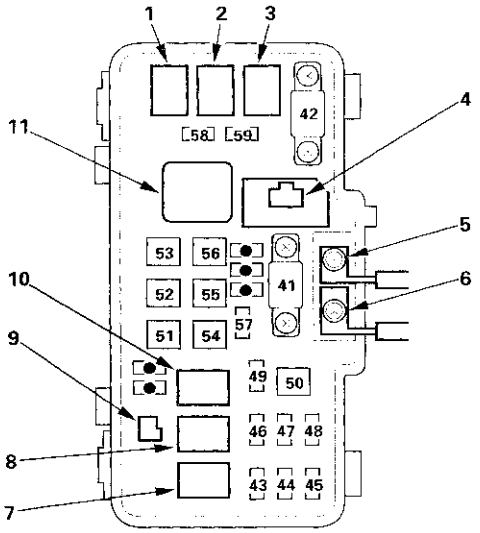

Driver's Under-dash Fuse/Relay Box

Fuse Number	Amps	Wire Color	Component(s) or Circuit(s) Protected
1	15A	RED/WHT	PGM-FI main relay
		RED/BLU (or GRN)	SRS unit (VA)
2	10A	BLK/WHT (or GRN)	SRS unit (VB)
3	7.5A	BLK/YEL	Blower motor high relay, Climate control unit, Heater control panel, Fan control module (Radiator fan control module), Recirculation control motor, Rear window defogger relay, Seat heater relay
4	7.5A	YEL/BLK	ABS control unit, Power mirror actuators, Power mirror defoggers (Canada), ABS/TCS control unit ('01 model)
		Fuse/relay box socket	Optional connector
5	7.5A	YEL/RED	Daytime running lights control unit (Canada)
6	15A	BLK/YEL	Alternator, Cruise control unit, Cruise control main switch indicator, ELD unit, Engine mount control solenoid valve, Evaporative emission bypass solenoid valve, Evaporative emission purge control solenoid valve, Gauge assembly, PCM, Primary and Secondary heated oxygen sensors, Vent shut solenoid valve, TCS switch ('01 model)
7	7.5A	YEL/GRN	Multiplex control unit (driver's) (All '98-99 models and '00 Sedan), Windshield washer motor (All '98-99 models and '00-01 Sedan), OPDS unit (with side airbags)
8	7.5A	YEL/BLK	Accessory socket relay
		Fuse/relay box socket	Optional connector
9	7.5A	YEL	Back-up lights, Brake failure sensor, Clock, DRL indicator light, Gauge assembly, Multiplex control unit (passenger's), Shift lock solenoid, Trailer lighting connector
		Fuse/relay box socket	Multiplex control unit (driver's)
10	7.5A	YEL/RED	Turn signal/hazard relay
11	15A	BLK/YEL	Ignition coils
12	30A	GRN/BLK	Windshield wiper intermittent relay, Windshield wiper motor, Windshield washer motor ('00-01 Coupe), Multiplex control unit (driver's) ('00-01 Coupe)
13	7.5A	BLU/ORN	PCM, PGM-FI main relay

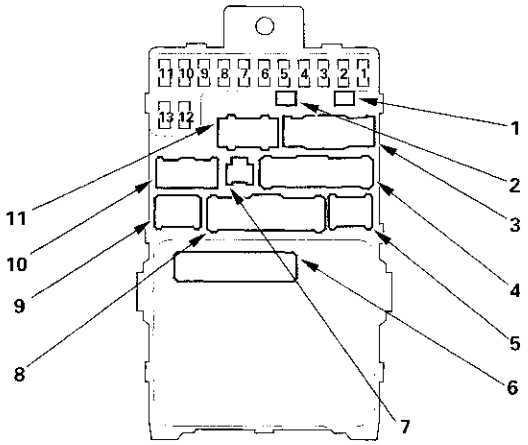

(cont'd)

Fuse to Components Index (cont'd)

Passenger's Under-dash Fuse/Relay Box

Fuse Number	Amps	Wire Color	Component(s) or Circuit(s) Protected
1	30 A	GRN	Moonroof motor
2	20 A	RED	Power seat rear up-down motor, Recline motor
3	20A	RED	Passenger's power seat, Slide motor ('01 Sedan)
4	20 A	BLU	Power seat front up-down motor, Slide motor
5	20A	WHT/RED	Passenger's power seat, Recline motor ('01 Sedan)
6	10 A	RED/BLU	Daytime running lights control unit (Canada)
7	20 A	WHT/YEL	Moonroof open relay, Moonroof close relay, Left rear power window motor (Sedan), Multiplex control unit (passenger's)
8	20 A	BLU/BLK	Passenger's power window motor
9	20 A	WHT/GRN	Audio unit
		WHT/RED	Audio unit, Accessory socket
10	10 A (Sedan) 15 A (Coupe)	RED/GRN	Heater control panel, A/T gear position console light, Driver's seat heater switch light (Canada), Audio unit, Gauge lights, Cruise main switch light, Moonroof switch light, Clock, Hazard warning switch light, Glove box light, Vanity mirror lights, Front parking lights, Front side marker lights, Rear side marker lights, License plate light(s), Taillights, Trailer lighting connector, Climate control unit
		Fuse/relay box socket	Multiplex control unit (driver's)
11	7.5 A	WHT/BLU	Courtesy lights, Trunk light, Ceiling light, Spotlights
12	20 A	Fuse/relay box socket	Multiplex control unit (passenger's)
13	7.5 A	WHT/YEL	PCM, Heater control panel, Security indicator, Multiplex control unit (door), Gauge assembly, Clock, Climate control unit
		Fuse/relay box socket	Multiplex control unit (driver's) Multiplex control unit (passenger's)
14	7.5 A	GRN	ABS control unit
15	20 A	GRN/WHT	Multiplex control unit (door)
16	20 A	WHT/BLK	Right rear power window motor (Sedan)

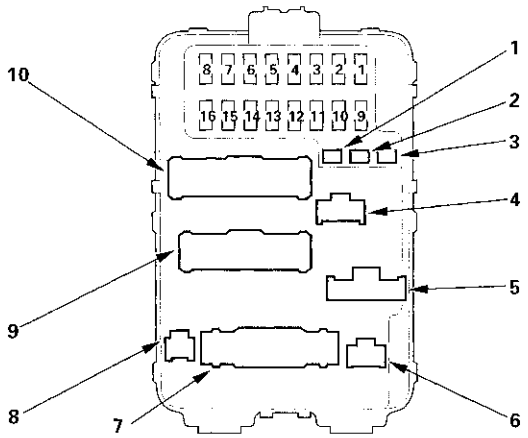

Ground Distribution

Ground to Components Index

NOTE: All ground wires are BLK unless otherwise noted.

Ground	Component or circuit grounded
G1	Battery, Transmission housing
G2	Engine block
G101 and G102 ('00-01 models)	PCM (PG1 and PG2 are BLK; LG1 and LG2 are BRN/BLK), Idle air control solenoid valve, Radiator fan switch, PGM-FI main relay, EGR control solenoid valve, Shift control solenoid valve assembly, A/T gear position switch, Engine coolant temperature switch, Ignition coils ('00 model)
	Shielding between the PCM and these components (all have BRN/BLK wires): CKP sensor, TDC sensor, Primary and secondary heated oxygen sensors, Mainshaft speed senser, Countershaft speed sensor, VTEC pressure switch, Data link connector (DLC), Immobilizer control unit
G201	Condenser fan motor, Radiator fan motor, Right headlight (low beam), Right front parking light, Right front side marker light, Right front turn signal light, Hood switch (security), Washer level switch, Windshield washer motor
G202	Seat heater relay ('98-00 models), Blower motor relay, ELD unit, ABS fail-safe relay, Power steering pressure switch, Cruise control actuator
G203	ABS pump motor, ABS/TCS modulator unit ('01 model)
G204	ABS control unit (2 wires), ABS/TCS control unit ('01 model)
G205	ABS control unit (2 wires), ABS/TCS control unit (2 wires) ('01 model)
G301	Left headlight (low beam), Left front parking light, Left front side marker light, Left front turn signal light
G302	Brake fluid level switch, Windshield wiper motor, Intermittent wiper relay, Seat heater relay ('01 model)
G401	Multiplex control unit (driver's), Turn signal/hazard relay, Power window master switch, Driver's door key cylinder switch, Driver's door lock switch, Driver's door lock knob switch, Ignition key switch, Daytime running lights control unit (Canada), Data link connector (DLC), Combination switches (3 wires), Heater control panel (2 wires), Fan control module (Radiator fan control module), Blower motor high relay, Power transistor, Climate control unit
G501	Moonroof switch, Moonroof open relay, Moonroof close relay, Driver's seat heater switch, Front passenger's seat heater switch, Glove box light, Transmission range switch (A/T gear position switch), Clock, Audio unit, Accessory socket, Gauge assembly, Cruise control unit, Cruise control main switch, OPDS unit ('00 Sedan with side airbags), Fuel gauge sending unit ('00 Coupe), Front passenger's seat belt switch ('00 model), Memory erase signal (MES) connector ('01 model), Cruise control main/TCS switch ('01 model)
G502	Audio unit
G503	Multiplex control unit (driver's)
G504	Multiplex control unit (passenger's)
G551	Power mirror switch, Left power mirror defogger (Canada), Driver's power window motor, Power window master switch (2 wires), High mount brake light, Driver's seat belt switch, Left rear door lock knob switch, Driver's power seat switch (2 wires), Driver's seat heater (Canada)
G552	Fuel pump (FP), Fuel gauge sending unit (All '98-99 models, '00 Sedan, and '01 model)
G581	Multiplex control unit (passenger's), Power window relay, Accessory relay, Vanity mirror lights, Spotlights, Passenger's door key cylinder switch, Passenger's door lock switch, Passenger's door lock knob switch, Front passenger's seat heater, Right power mirror defogger (Canada), Right rear door lock knob switch, OPDS unit (Coupe with side airbags, '01 Sedan with side airbags) Front passenger's seat belt switch ('01 model), Front passenger's power seat switch (2 wires) ('01 model)
G601	Taillights (right, left), License plate light, Trunk latch switch, Trunk key cylinder switch (security), Trunk actuator (security), Brake light failure sensor, Trailer lighting connector
G801	SRS unit (2 wires), Memory erase signal (MES) connector ('00 model)

Battery Test

⚠ WARNING

A battery can explode if you do not follow the proper procedure, causing serious injury to anyone nearby. Follow all procedures carefully and keep sparks and open flames away from the battery.

Use either a JCI or Bear ARBST tester, and follow the manufacturer's procedures. If you don't have one of these computerized tester, follow this conventional test procedure:

1. Be sure the temperature of the electrolyte is between 70°F (21°C) and 100°F (38°C).

2. Inspect the battery case for cracks or leaks.

   - If the case is damaged, replace the battery. ■
   - If the case looks OK, go to step 3.

3. Check the indicator EYE.

   - If the EYE indicates the battery is charged, go to step 4.
   - If the EYE indicates a low charge, go to step 7.

4. Apply a 300 amp load for 15 seconds to remove the surface charge.

5. Wait 15 seconds, then apply a test load of 280 amps for 15 seconds.

6. Record battery voltage.

   - If voltage is above 9.6 volts, the battery is OK. ■
   - If voltage is below 9.6 volts, go to step 7.

7. Charge the battery on High (40 amps) until the EYE shows the battery is charged, plus an additional 30 minutes. If the battery charge is very low, it may be necessary to bypass the charger's polarity protection circuitry.

   - If the EYE indicates the battery is charged within 3 hours, the battery is OK. ■
   - If the EYE indicates the battery is not charged within 3 hours, replace the battery. ■

Power Relay Test

Identify the relay, then do the test listed for it.

NOTE: Refer to the '98-01 Accord Service Manual for the relay input test except that it is mentioned in this manual (see page 22-52)

Relay	Test
TCS relay	Normally-open type A

Normally-open type A:

Check for continuity between the terminals.

- There should be continuity between the No. 1 and No. 2 terminals when power and ground are connected to the No. 3 and No. 4 terminals.
- There should be no continuity between the No. 1 and No. 2 terminals when power is disconnected.
  - TCS relay ('01 model)

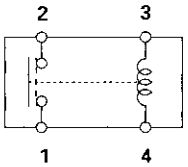

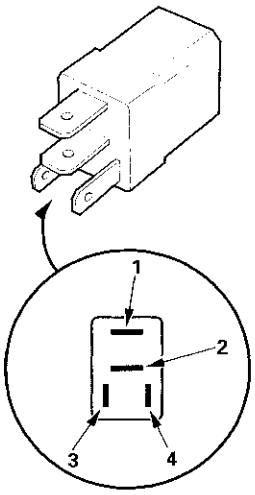

Gauge Bulb Replacement

Bulb Location

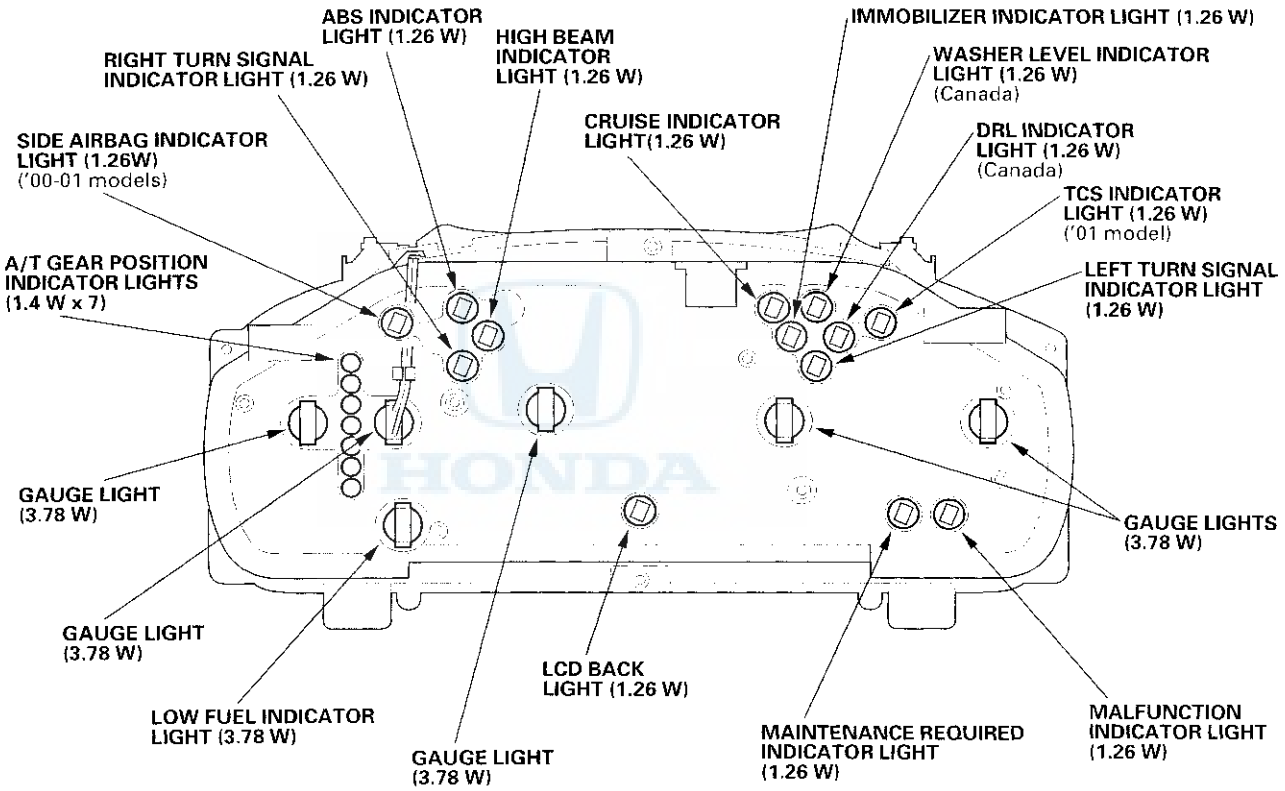

Circuit Diagram

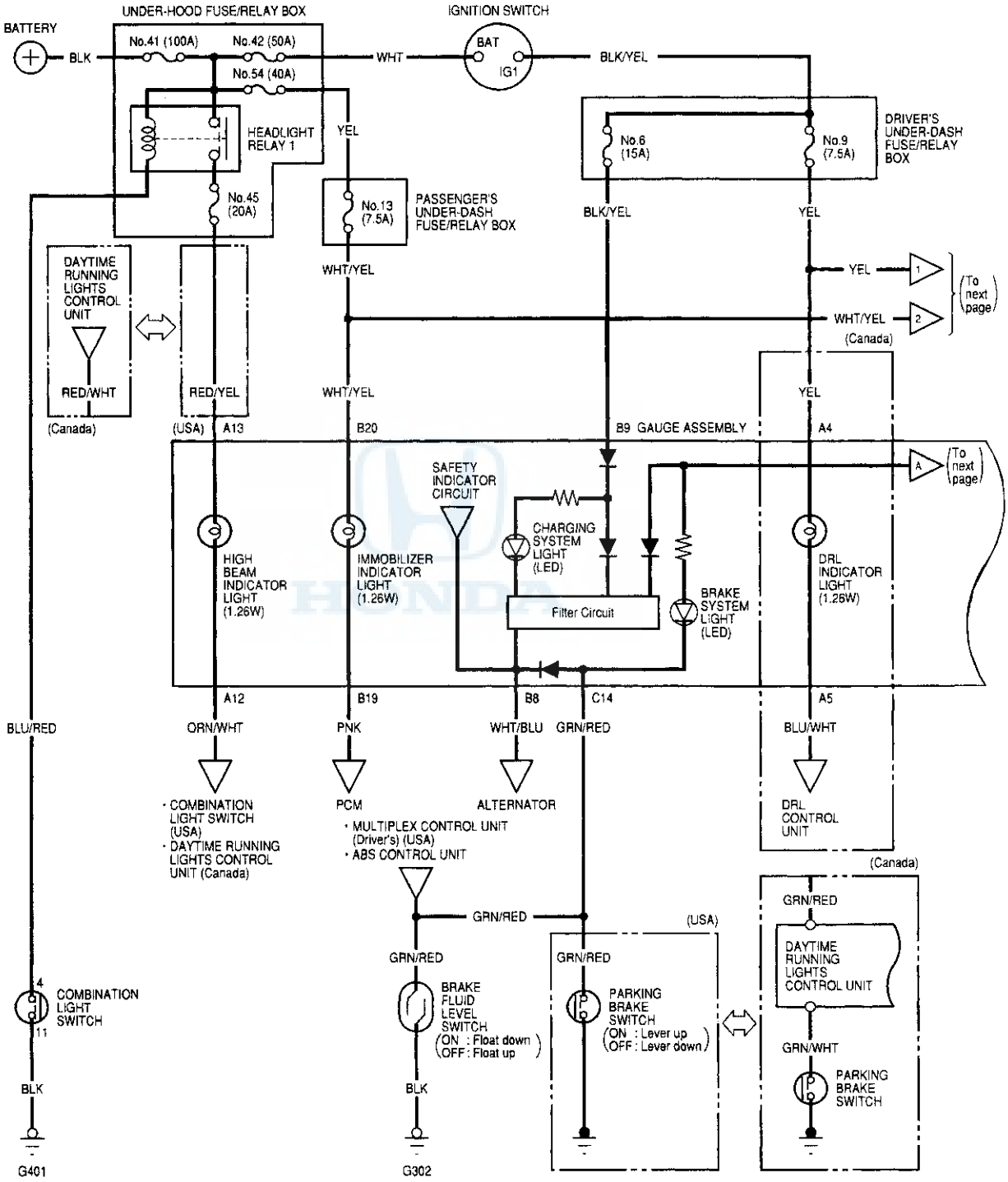

(cont'd)

Circuit Diagram (cont'd)

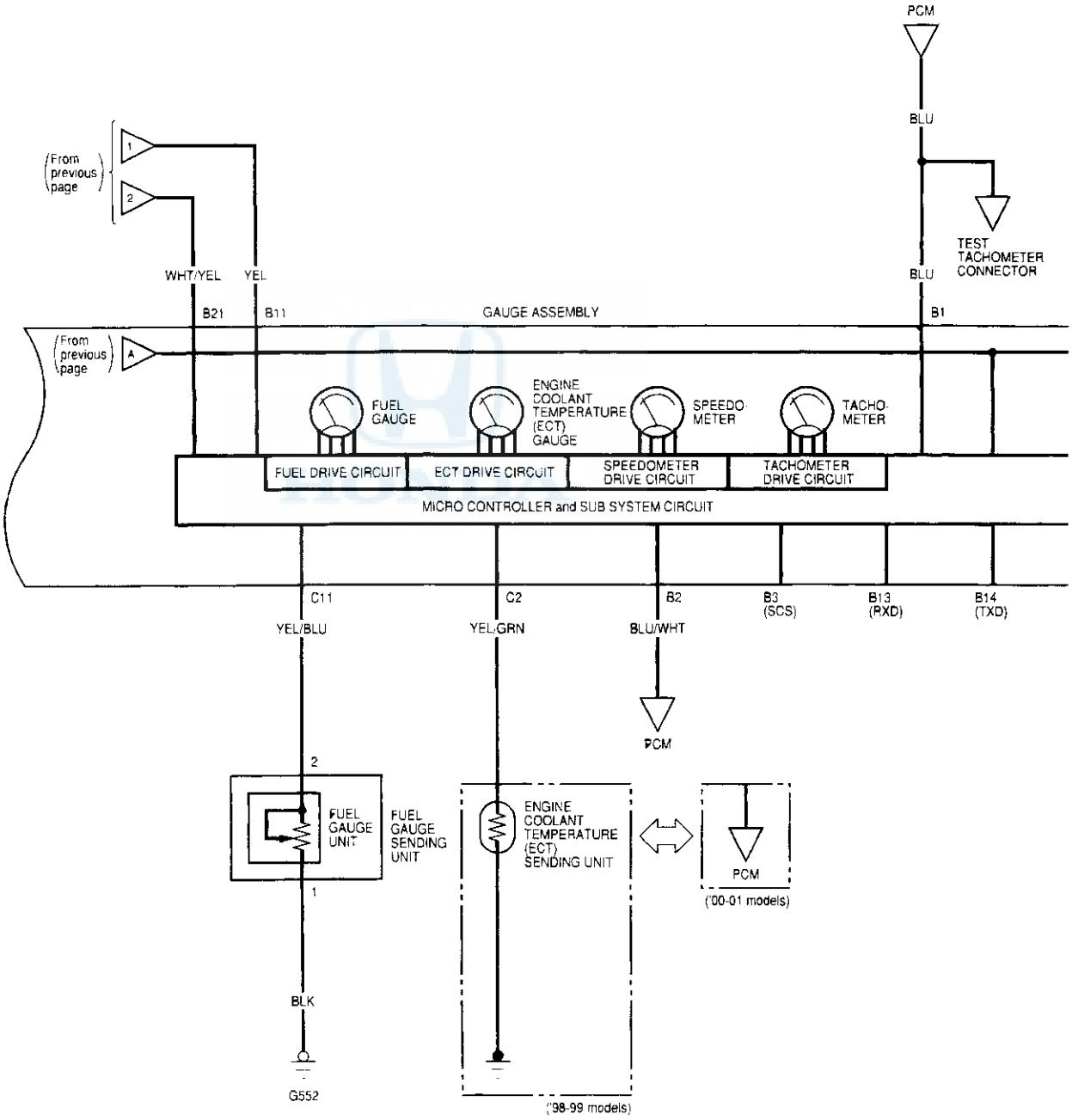

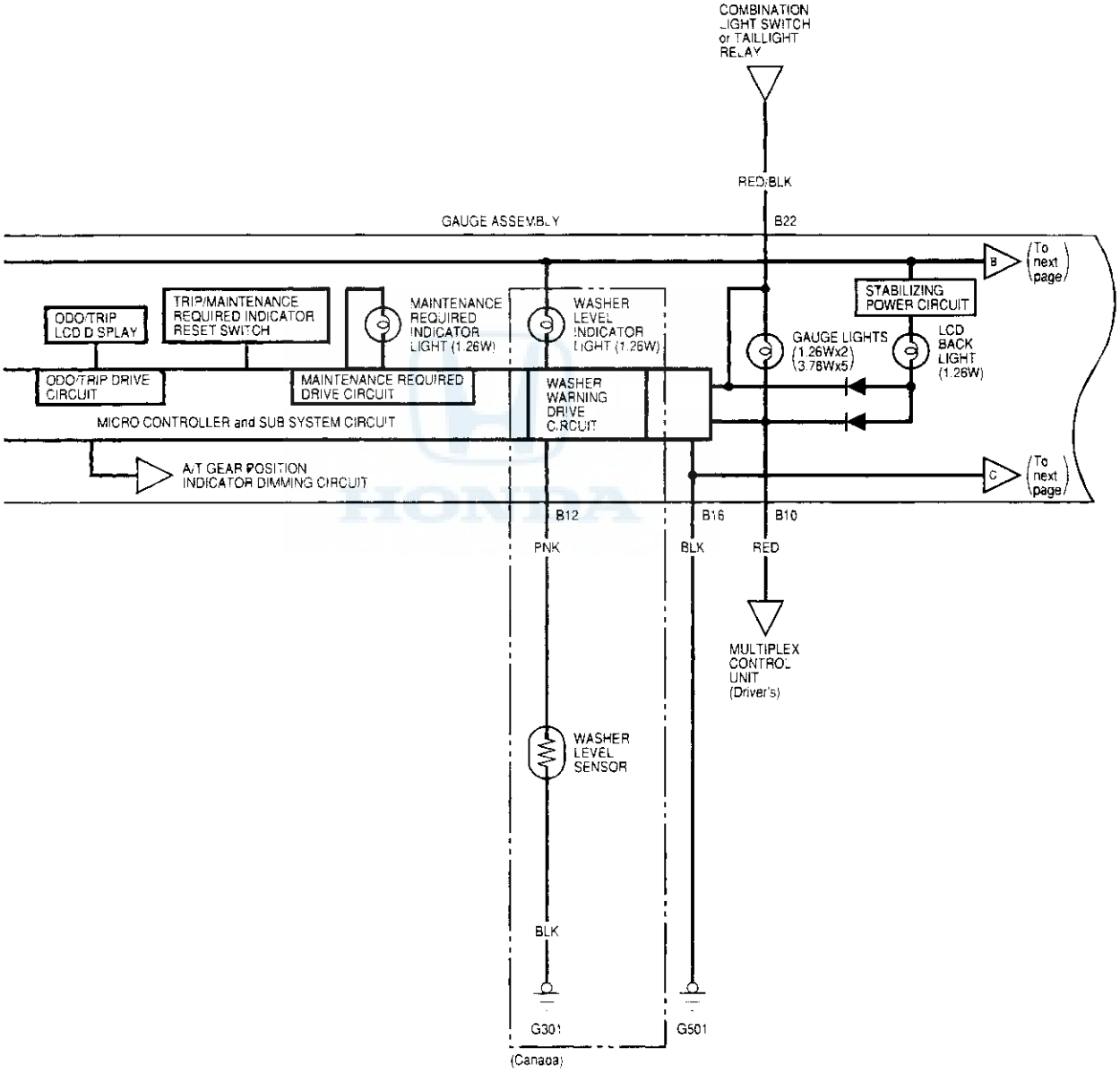
COMBINATION LIGHT SWITCH or TAILLIGHT RELAY
RED/BLK
B22
GAUGE ASSEMBLY
B
(To next page)
STABILIZING POWER CIRCUIT
ODO/TRIP LCD DISPLAY
TRIP/MAINTENANCE REQUIRED INDICATOR RESET SWITCH
MAINTENANCE REQUIRED INDICATOR LIGHT (1.26W)
WASHER LEVEL INDICATOR LIGHT (1.26W)
GAUGE LIGHTS (1.26Wx2) (3.78Wx5)
LCD BACK LIGHT (1.26W)
ODO/TRIP DRIVE CIRCUIT
MAINTENANCE REQUIRED DRIVE CIRCUIT
WASHER WARNING DRIVE CIRCUIT
MICRO CONTROLLER and SUB SYSTEM CIRCUIT
A/T GEAR POSITION INDICATOR DIMMING CIRCUIT
C
(To next page)
B12
B16
B10
PNK
BLK
RED
MULTIPLEX CONTROL UNIT (Driver's)
WASHER LEVEL SENSOR
BLK
G301
G501
(Canada)

(cont'd)

Circuit Diagram (cont'd)

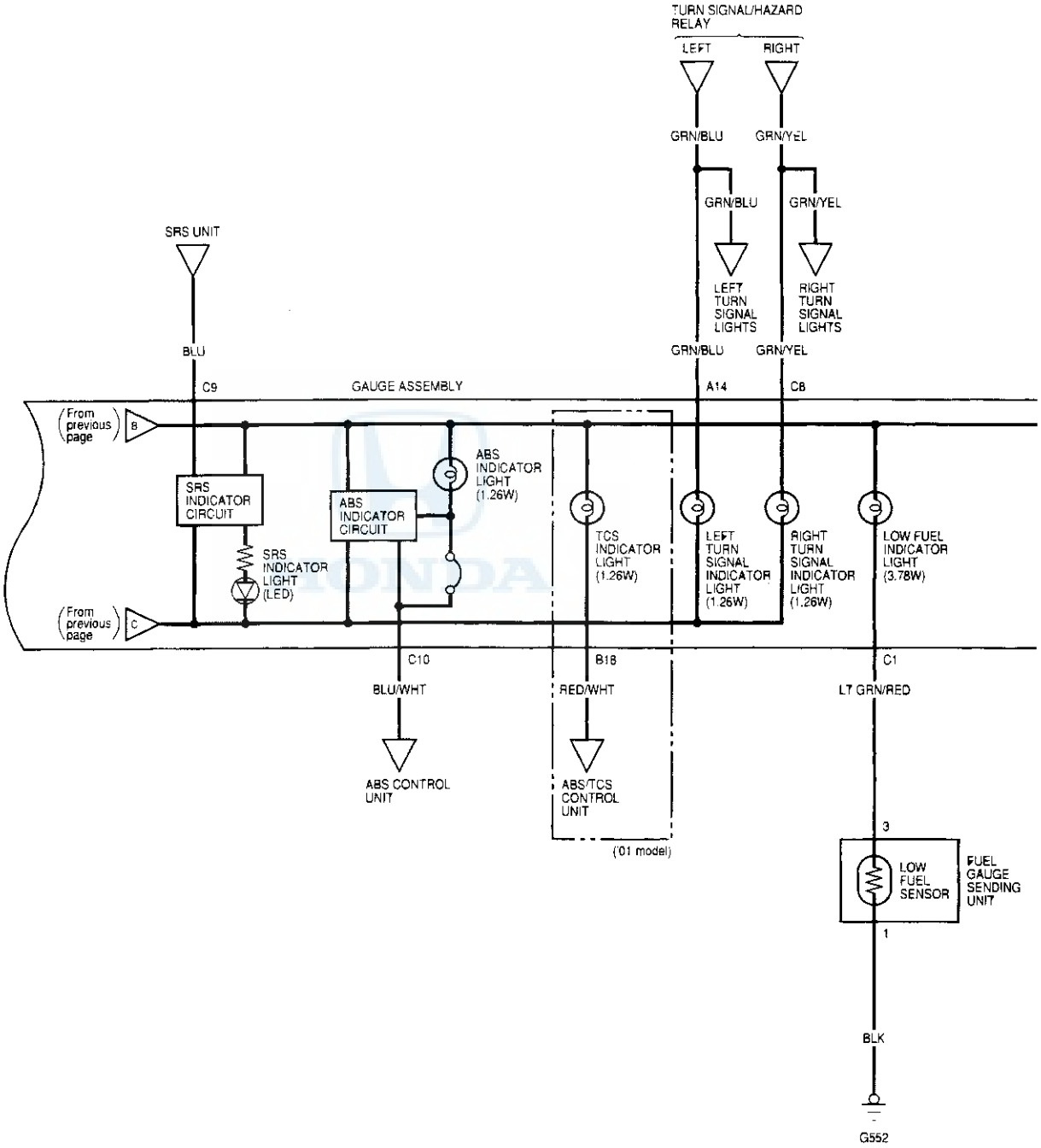

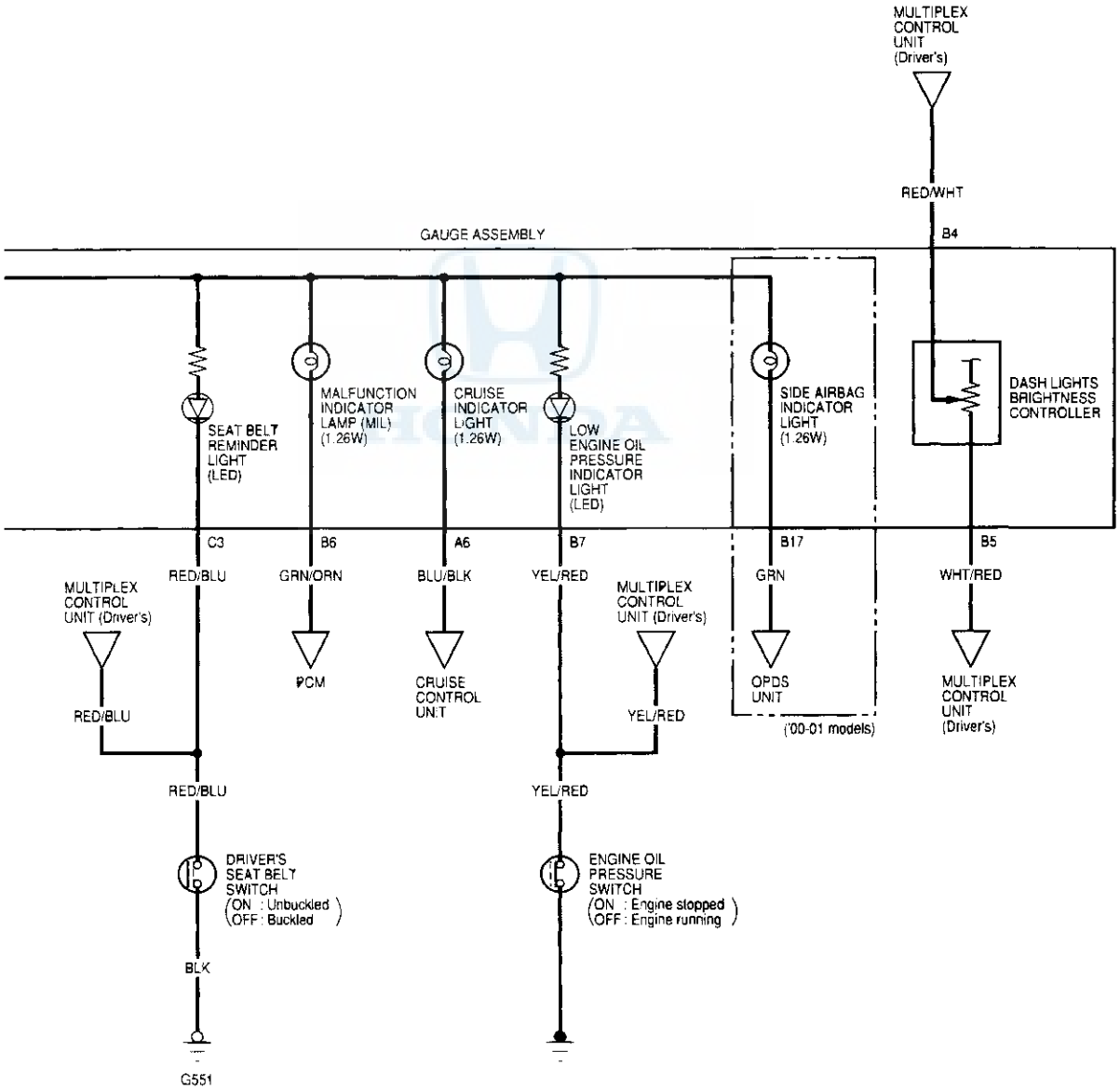
MULTIPLEX CONTROL UNIT (Driver's)
RED/WHT
B4
GAUGE ASSEMBLY
SEAT BELT REMINDER LIGHT (LED)
MALFUNCTION INDICATOR LAMP (MIL) (1.26W)
CRUISE INDICATOR LIGHT (1.26W)
LOW ENGINE OIL PRESSURE INDICATOR LIGHT (LED)
SIDE AIRBAG INDICATOR LIGHT (1.26W)
DASH LIGHTS BRIGHTNESS CONTROLLER
C3
B6
A6
B7
B17
B5
RED/BLU
GRN/ORN
BLU/BLK
YEL/RED
GRN
WHT/RED
MULTIPLEX CONTROL UNIT (Driver's)
PCM
CRUISE CONTROL UNIT
MULTIPLEX CONTROL UNIT (Driver's)
OPDS UNIT
('00-01 models)
MULTIPLEX CONTROL UNIT (Driver's)
RED/BLU
YEL/RED
RED/BLU
YEL/RED
DRIVER'S SEAT BELT SWITCH
(ON : Unbuckled
OFF : Buckled)
ENGINE OIL PRESSURE SWITCH
(ON : Engine stopped
OFF : Engine running)
BLK
G551

Safety Indicator System

Circuit Diagram

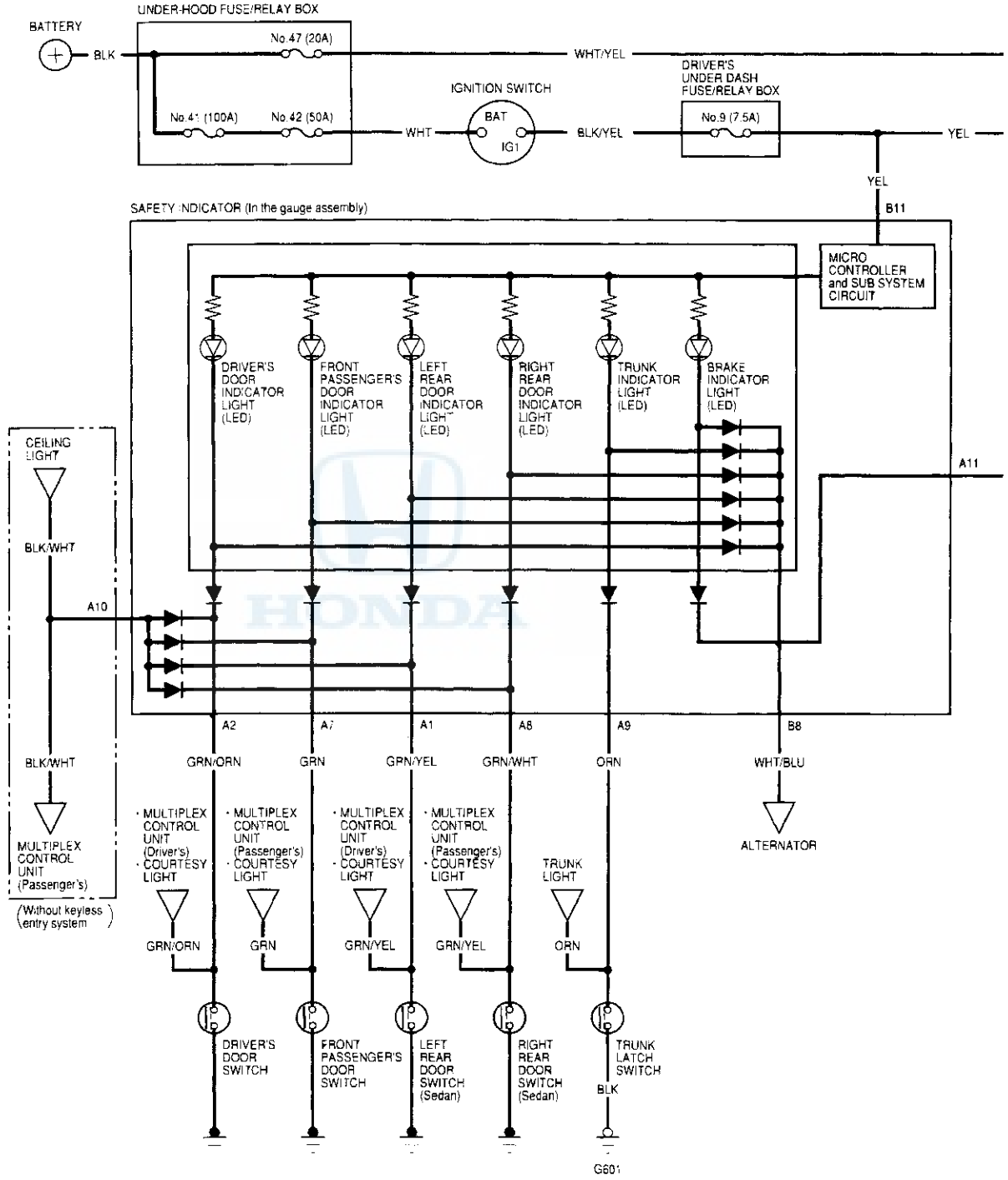

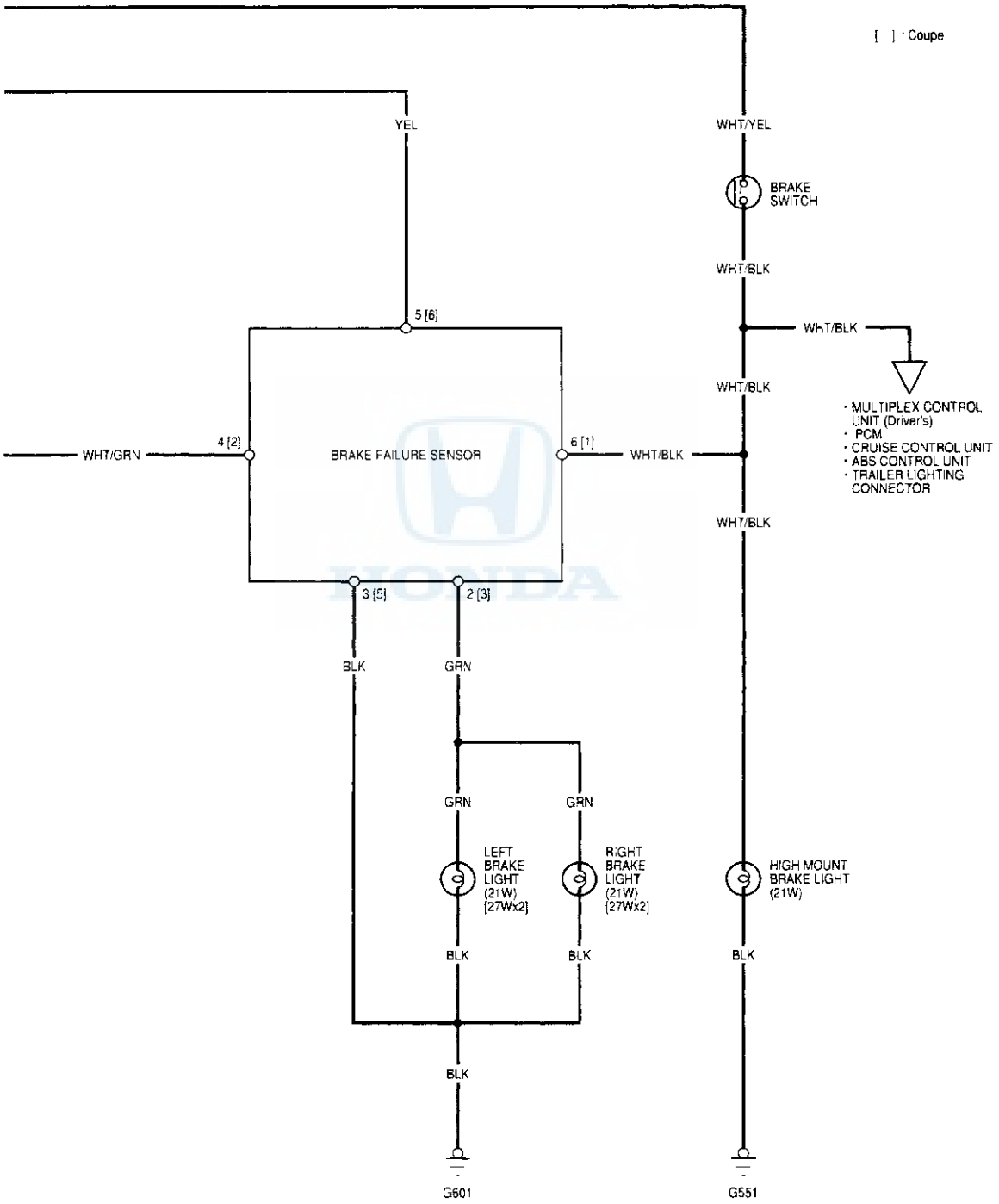
[ ] : Coupe
YEL
WHT/YEL
BRAKE SWITCH
WHT/BLK
5 [6]
WHT/BLK
WHT/BLK
· MULTIPLEX CONTROL UNIT (Driver's)
· PCM
· CRUISE CONTROL UNIT
· ABS CONTROL UNIT
· TRAILER LIGHTING CONNECTOR
WHT/GRN
4 [2]
BRAKE FAILURE SENSOR
6 [1]
WHT/BLK
WHT/BLK
3 [5]
2 [3]
BLK
GRN
GRN
GRN
LEFT BRAKE LIGHT (21W) [27Wx2]
RIGHT BRAKE LIGHT (21W) [27Wx2]
HIGH MOUNT BRAKE LIGHT (21W)
BLK
BLK
BLK
BLK
G601
G551

Component Location Index

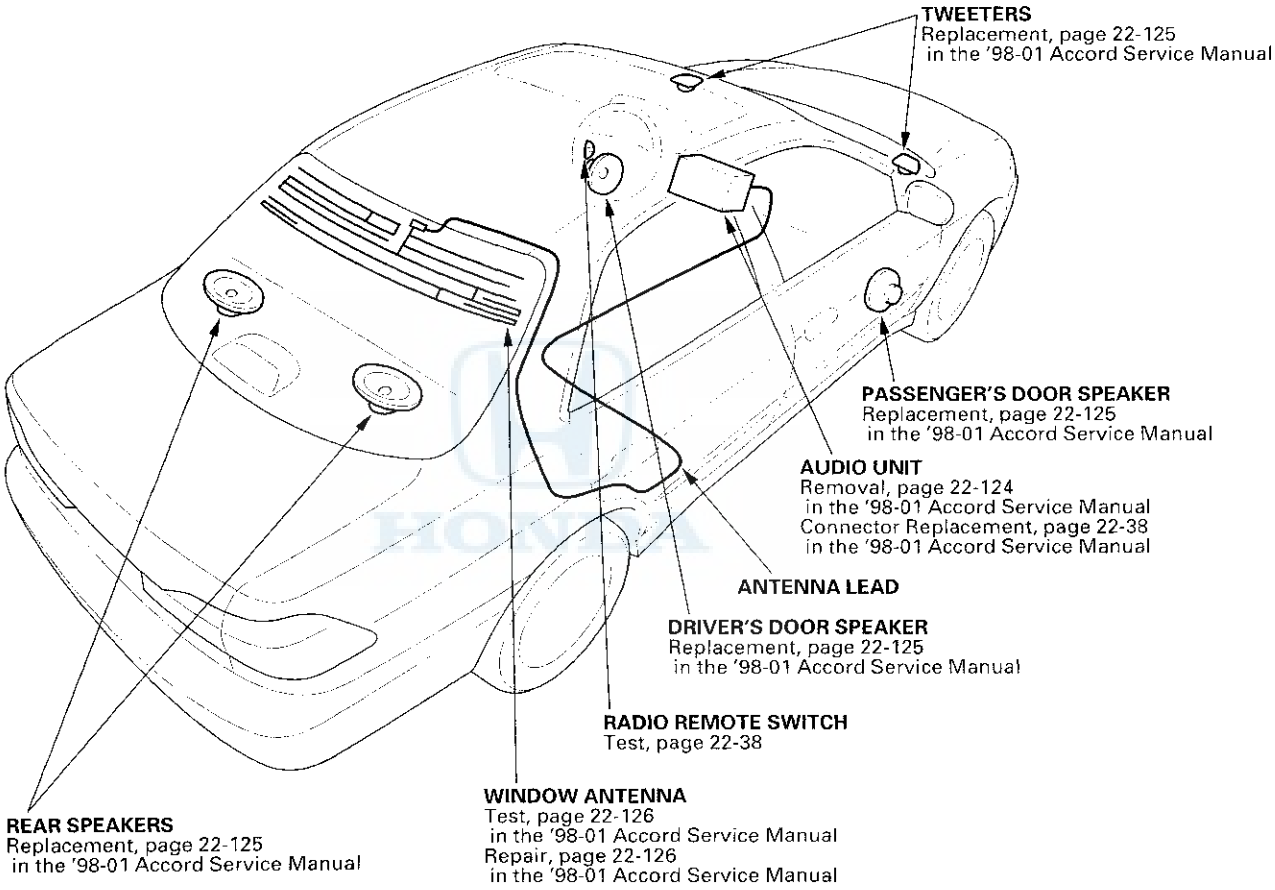

Circuit Diagram

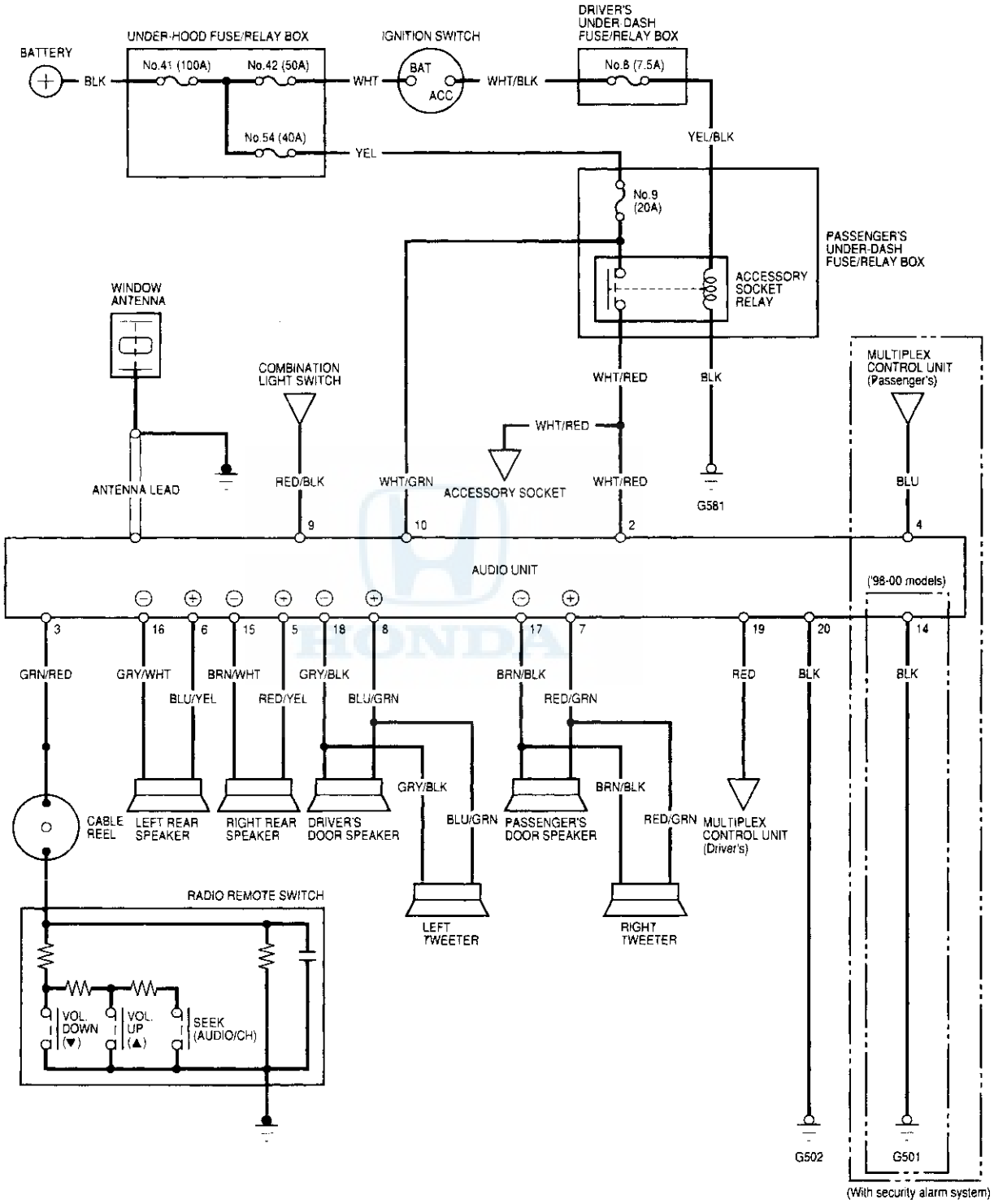

Audio Unit Connector Replacement

When replacing an audio unit connector, match the wires to the cavities listed in the following table. Cavities 1, 11, 12, and 13 are not used.

Cavity	Wire	Connect to
2	WHT/RED	ACC (Main stereo power supply)
3	GEN/RED	Radio remote switch
4	BLU	Security IN
5	RED/YEL	Right rear speaker (+)
6	BLU/YEL	Left rear speaker (+)
7	RED/GRN	Front passenger's speaker (−) Right tweeter (+)
8	BLU/GRN	Driver's door speaker (−) Left tweeter (+)
9	RED/BLK	Lights-on signal
10	WHT/GRN	Constant power
14*	BLK	Security OUT
15	BRN/WHT	Right rear speaker (−)
16	GRY/WHT	Left rear speaker (−)
17	BRN/BLK	Front passenger's door speaker (−) Right tweeter (−)
18	GRY/BLK	Driver's door speaker (−) Left tweeter (−)
19	RED	Dash lights brightness controller
20	BLK	Ground (G502)

*: '98-00 models

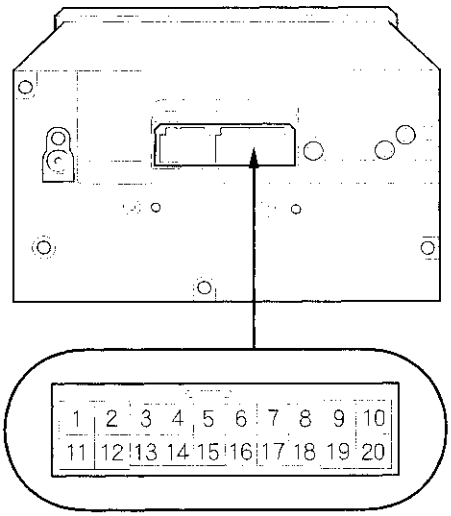

Radio Remote Switch Test

1. Remove the 2 screws (A) from the radio remote switch (B).

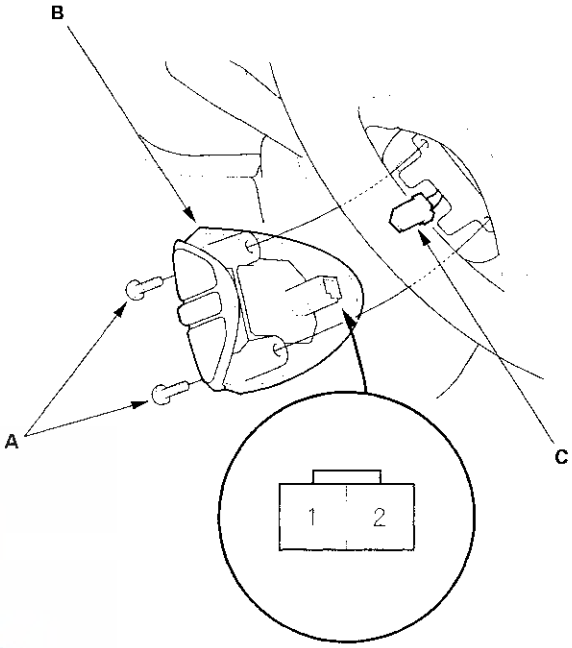

2. Remove the radio remote switch (B) from the steering wheel by removing the 2 screws, and disconnect the 2P connector (C).

3. Measure resistance between the No. 1 and No. 2 terminals in each switch position according to the table.

Position	Resistance
OFF	Approx. 3.6 kΩ
AUDIO/CH (SEEK)	Approx. 780 Ω
▲ (VOL. UP)	Approx. 360 Ω
▼ (VOL. DOWN)	Approx. 100 Ω

Homelink Remote Control System

Circuit Diagram

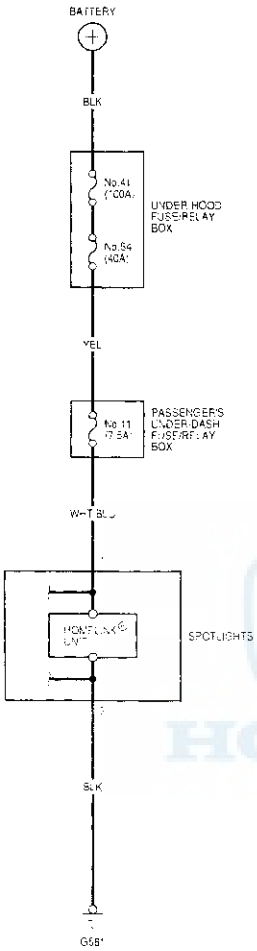

Test

Turn on the spotlight.

- If the spotlight comes on, the Homelink's power and ground circuits are OK. If the Homelink will not open the customer's garage door, check that the Homelink is programmed properly (see the owner's manual) or call Homelink at 800-355-3515. On the Internet, go to www.homelink.jci.com
- If the spotlight does not come on, check for these problems:
  - A blown No. 11 (7.5 A) fuse in the passenger's under-dash fuse/relay box.
  - An open in the WHT/BLU wire between the passenger's under-dash fuse/relay box and spotlight.
  - An open in the BLK wire between the spotlight and G581.

Component Location Index

Passenger's Power Seat (4-way Adjustable):

NOTE: Refer to the '98-01 Accord Service Manual, P/N 61S8006, for the driver's power seat.

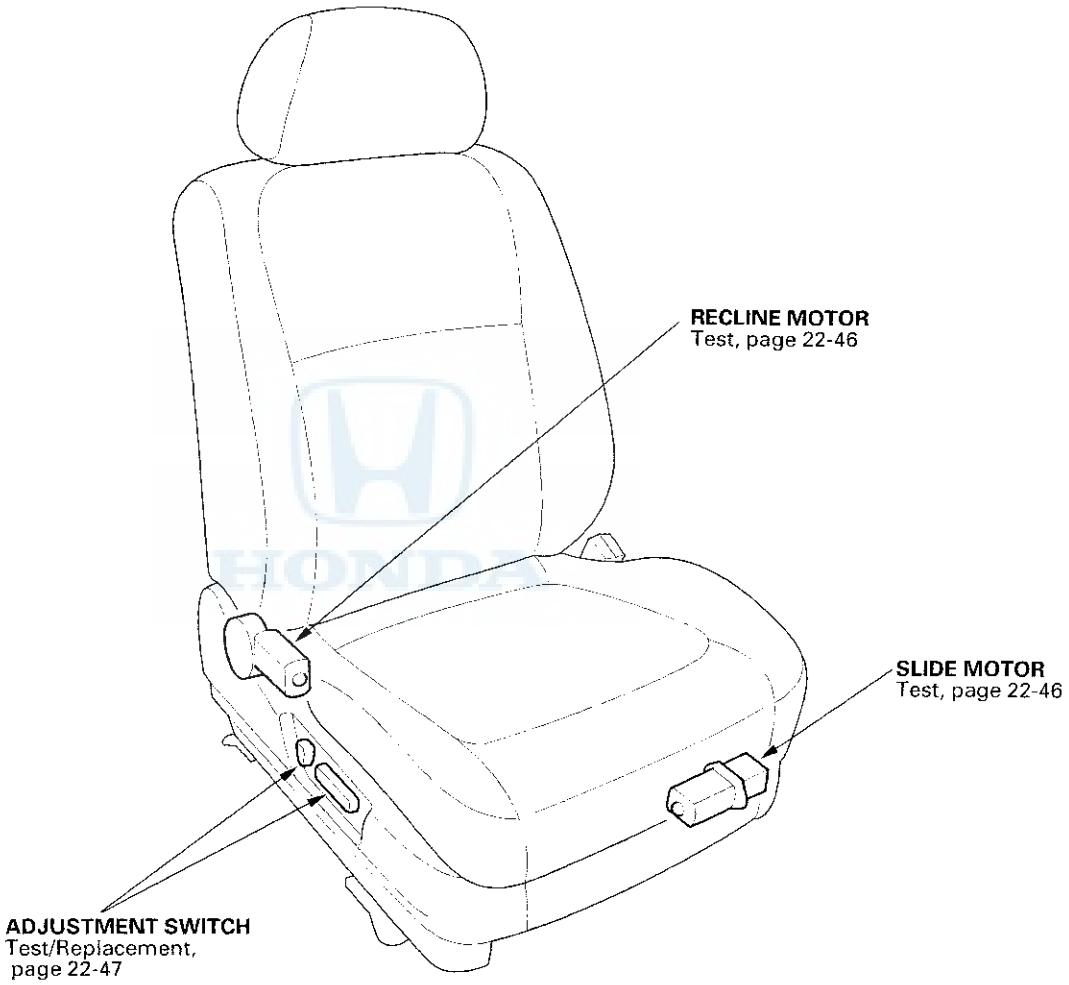

Circuit Diagram - 4-way Adjustable

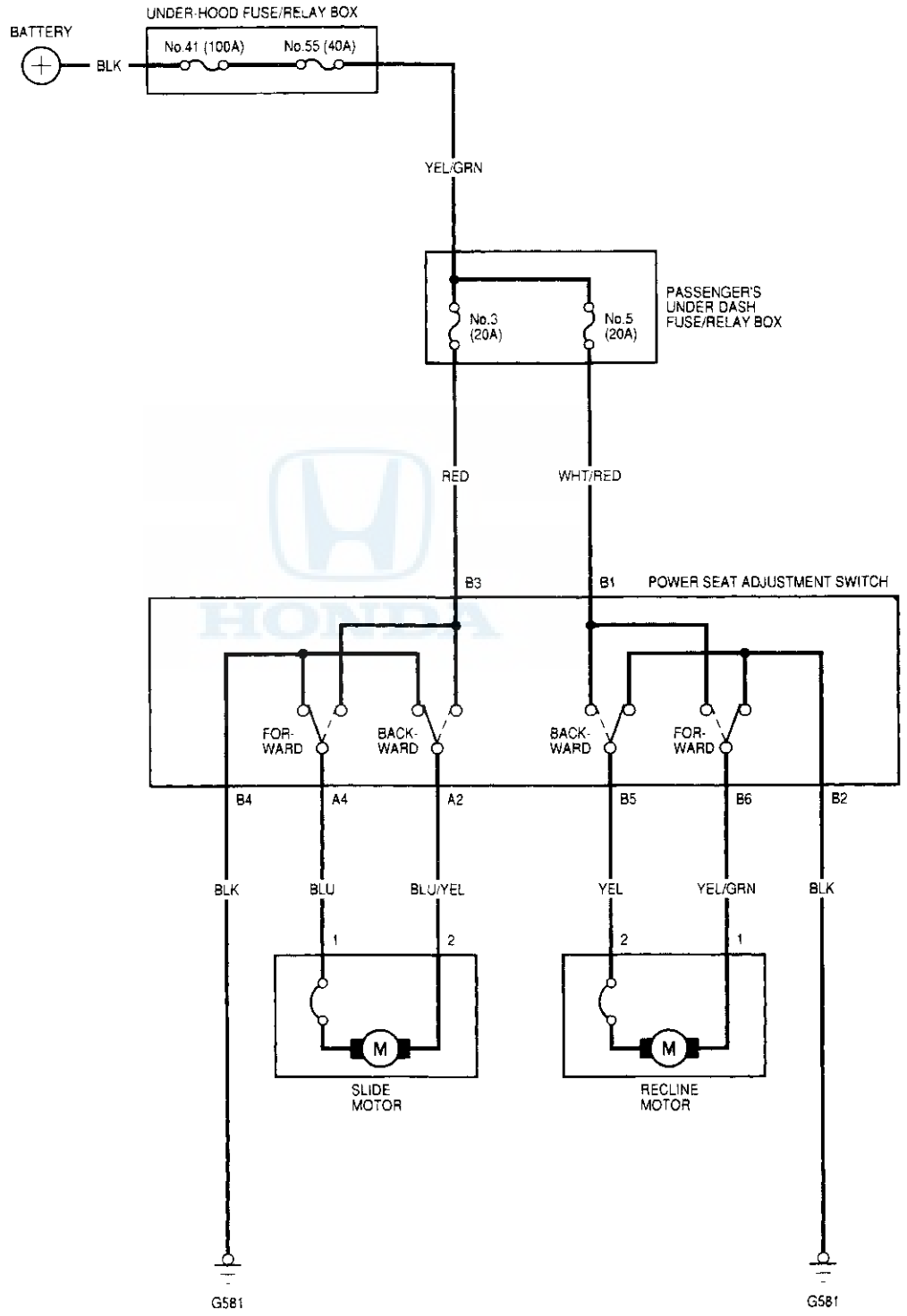

Motor Test

Passenger's Power Seat (4-way Adjutable):

1. Remove the passenger's seat (see page 20-2).
2. Disconnect the 6P connectors from the adjustment switch.

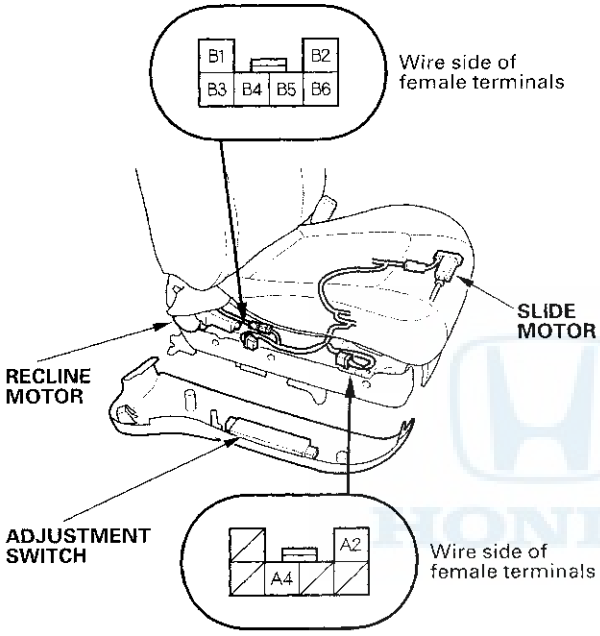

3. Test the motor. When the motor stops running, disconnect battery power immediately.

Recline motor:

Terminal / Position	B5	B6
Forward	⊖	⊕
Backward	⊕	⊖

Slide motor:

Terminal / Position	A2	A4
Forward	⊖	⊕
Backward	⊕	⊖

4. If the motor does not run or fails to run smoothly, check for an open in the power seat wire harness between the 6P connector and the 2P connectors. If the harness is OK, replace the motor (see page 20-2).

Switch Test/Replacement

Passenger's Power Seat (4-way Adjustable):

1. Remove the adjustment switch cover (A) from the passenger's seat by removing the 2 screws (B), and pulling off the adjustment switch knobs (C).

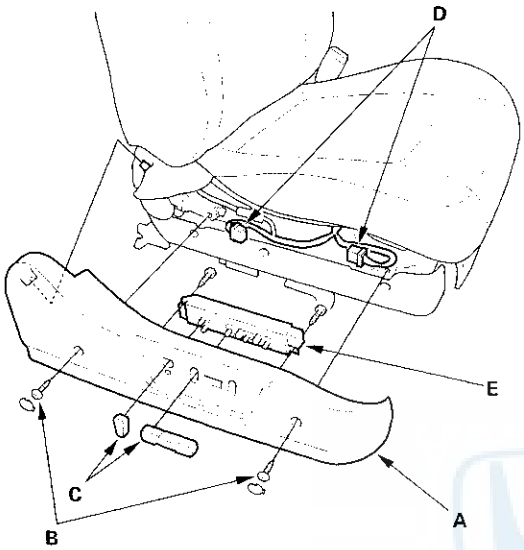

2. Disconnect the 6P connectors (D) from the adjustment switch (E), then remove the switch from the cover by removing its 2 mounting screws.

3. Reinstall the adjustment switch knobs.

4. Check for continuity between the terminals in each switch position according to the table.

Position \ Terminal		A2	A4	B1	B2	B3	B4	B5	B6
SLIDE SWITCH	FOR WARD	○	○			○	○		
	BACK WARD	○	○			○	○		
RECLINE SWITCH	FOR WARD			○	○			○	○
	BACK WARD			○	○			○	○

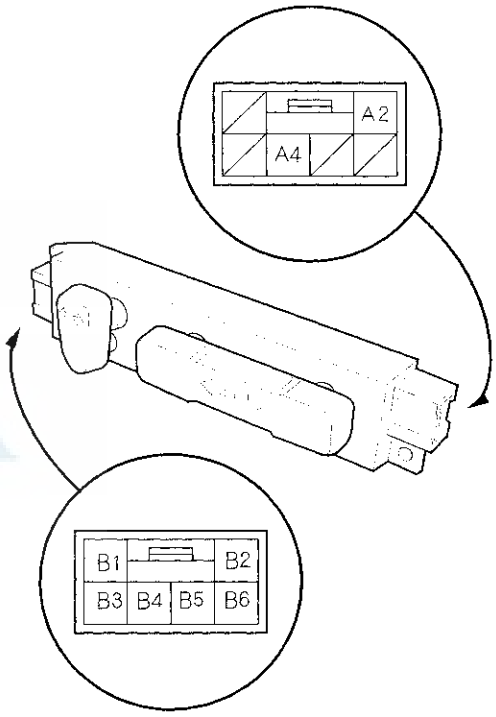

Seat Heaters - Canada

Component Location Index

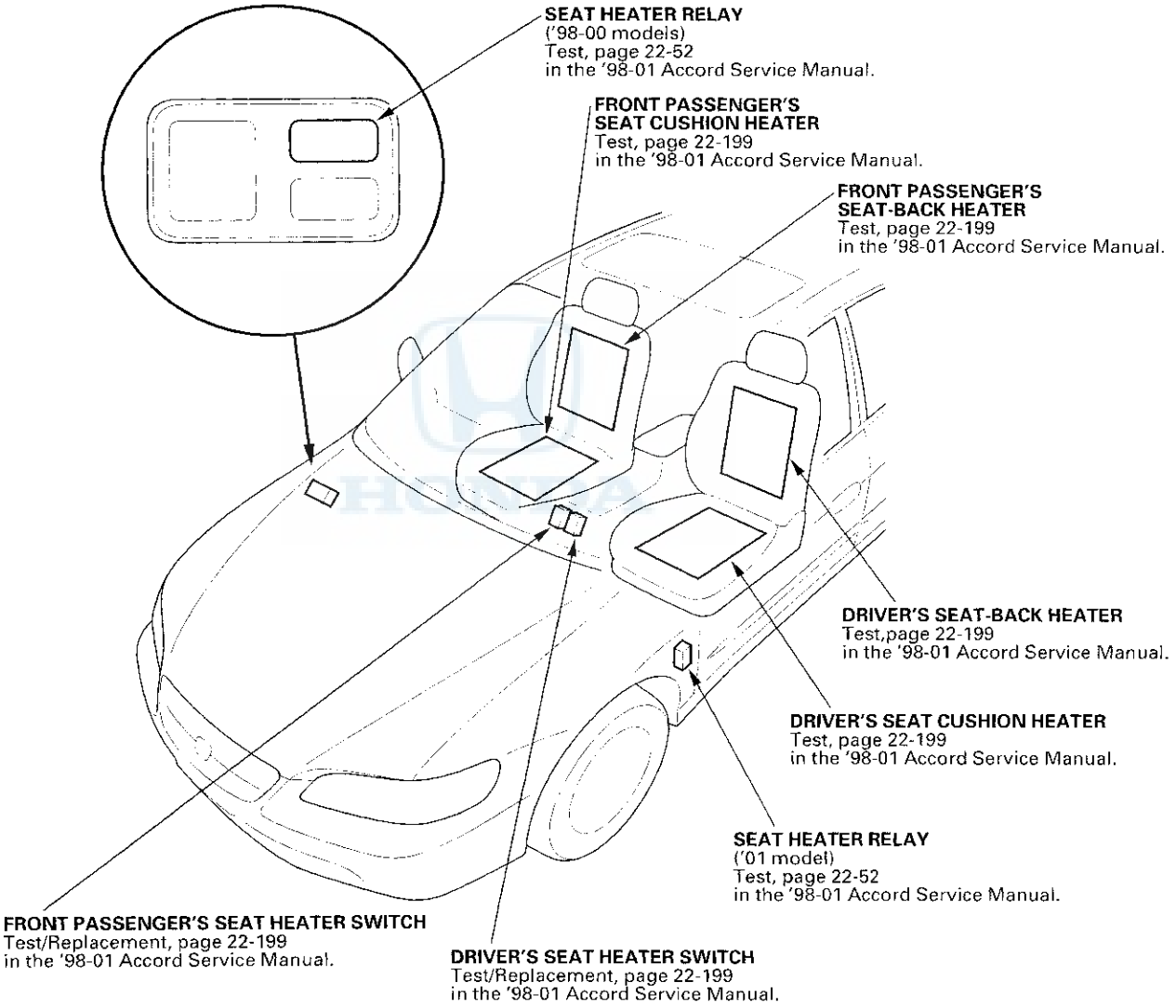

Circuit Diagram

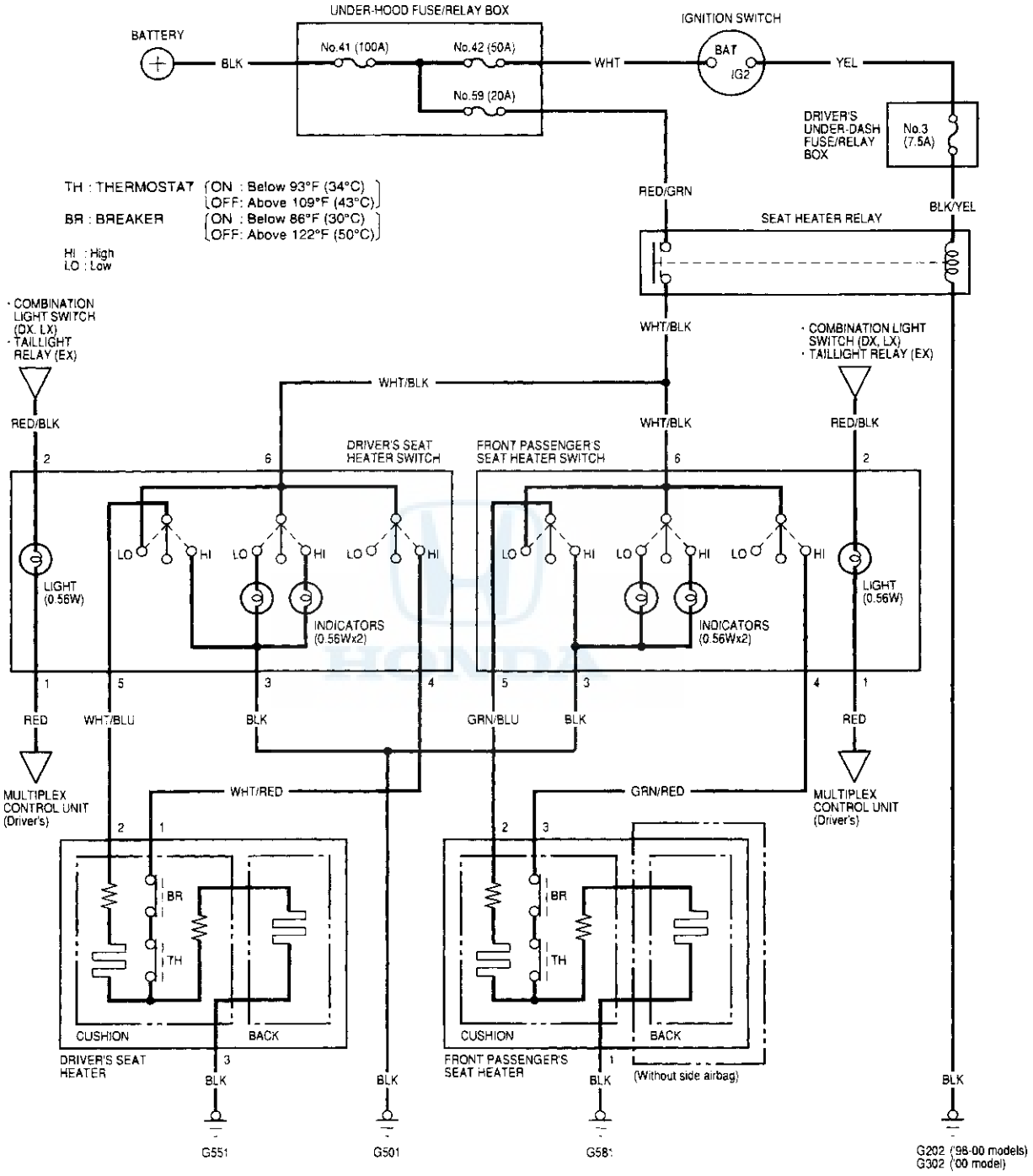

Restraints

SRS (Supplemental Restraint System)

NOTE: Refer to the '98-01 M Accord Service Manual, P/N 61S8008, for the items not shown in this section.

SRS Unit Identification

'98 Model

MAKER	IDENTIFICATION MARK
KEIHIN	M2

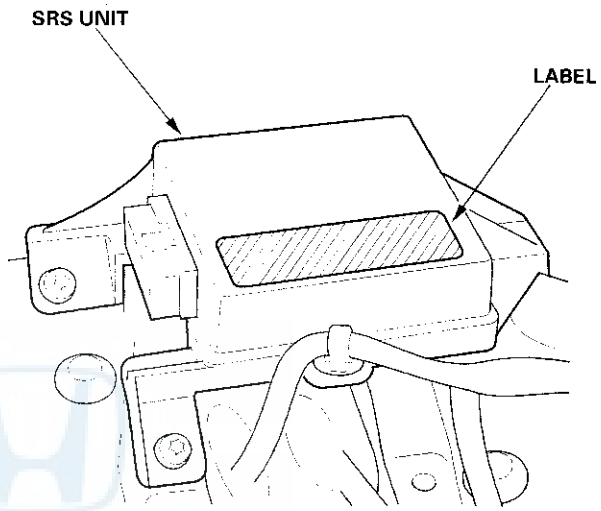

DTC Troubleshooting Index

'98 Model
KEIHIN (M2) SRS unit

DTC	Detection Item	Notes
1-1	Open in driver's airbag inflator	(see page 23-74)*1
1-2	Increased resistance in driver's airbag inflator	(see page 23-74)*1
1-3	Short to another wire or decreased resistance in driver's airbag inflator	(see page 23-76)*1
1-4	Short to power in driver's airbag inflator	(see page 23-78)*1
1-5	Short to ground in driver's airbag inflator	(see page 23-80)*1
2-1	Open in passenger's airbag inflator	(see page 23-82)*1
2-2	Increased resistance in passenger's airbag inflator	(see page 23-82)*1
2-3	Short to another wire or decreased resistance in passenger's airbag inflator	(see page 23-83)*1
2-4	Short to power in passenger's airbag inflator	(see page 23-85)*1
2-5	Short to ground in passenger's airbag inflator	(see page 23-86)*1
5-1	Internal failure of SRS unit	(see page 23-88)*1
5-2		
5-3		
5-4		
6-1		
6-2		
6-3		
6-4		
7-1		
7-2		
7-3		
8-1		
8-2		
8-5		
8-6		
9-1	Internal failure of the SRS unit. If intermittent, could mean internal failure of the unit or a faulty indicator light circuit. Refer to Troubleshooting Intermittent Failures (see page 23-45)*1	(see page 23-88)*1
9-2	Internal failure of the SRS unit. If intermittent, could mean internal failure of the power supply (VB line). Refer to Troubleshooting Intermittent Failures (see page 23-45)*1	
10-1	SRS airbag deployed (SRS unit must be replaced)	(see page 23-88)*1

*1: Refer to the '98-01 Accord Service Manual, P/N 61S8008.

Symptom Troubleshooting Index

'98 Model

Symptom	Diagnostic procedure	Also check for
SRS indicator light doesn't come on.	SRS Indicator Light Troubleshooting, refer to '98-01 Accord Service Manual, P/N 61S8008 (see page 23-264)*1.	
The SRS indicator light stays on after the ignition switch is turned on (II).	SRS Indicator Light Troubleshooting, refer to '98-01 Accord Service Manual, P/N 61S8008 (see page 23-264)*1.	

*1: Refer to the '98-01 Accord Service Manual, P/N 61S8008.

Service Manual Index

NOTE: Refer to the following list to look up DTCs, symptoms, fuses, connectors, wire harnesses, specifications, maintenance schedules, and general service information:

A

(cont'd)

Service Manual Index

(cont'd)

B

C

D

E

F

G

H

I

K

L

(cont'd)

Service Manual Index

(cont'd)

NOTES

NOTES

NOTES

NOTES

NOTES

NOTES